# SUSTAINABLE ENERGY IN AGRICULTURE

Edited by Professor
GENNADII GOLUB

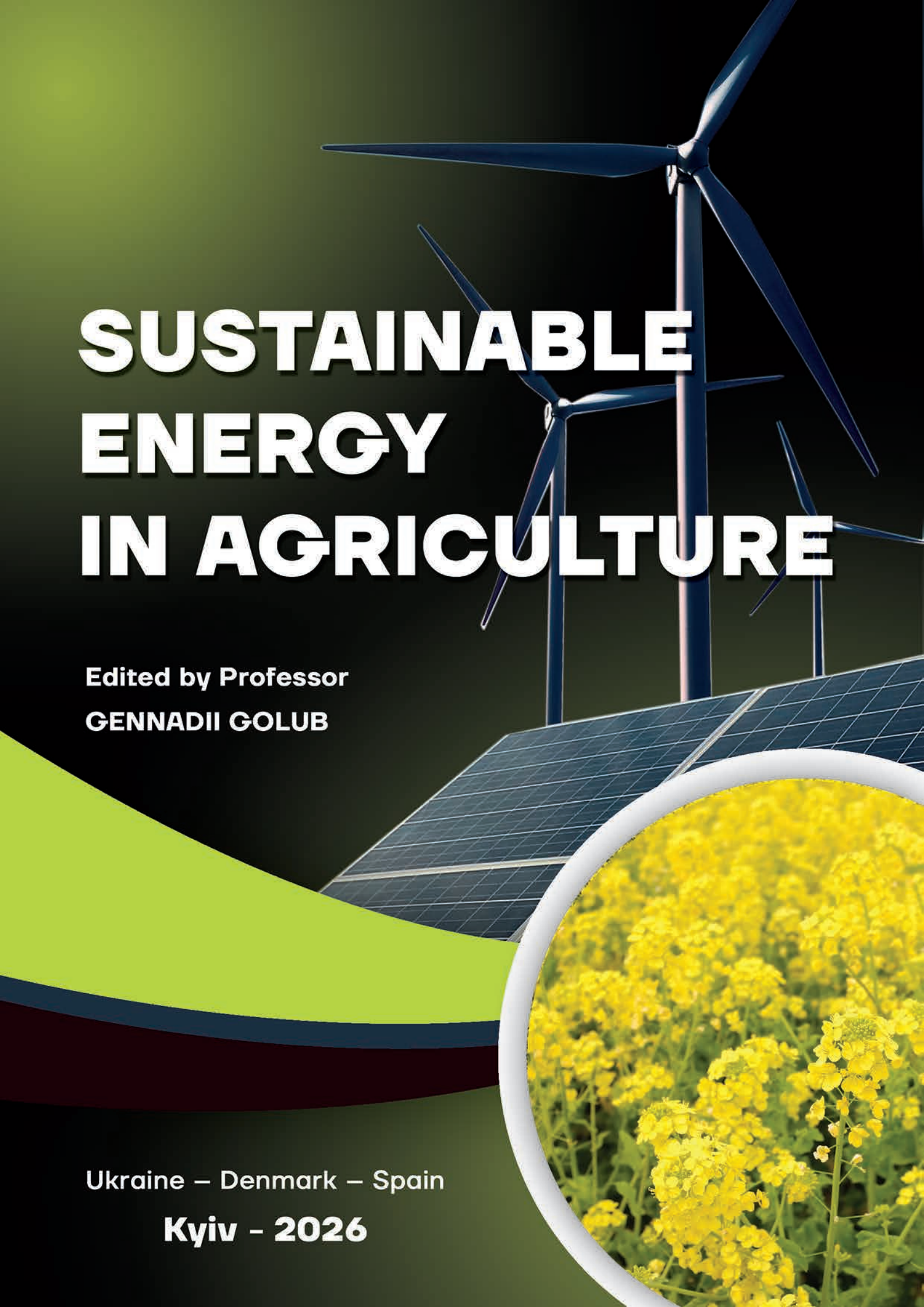

Ukraine – Denmark – Spain
Kyiv - 2026

**NATIONAL UNIVERSITY OF LIFE**
**AND ENVIRONMENTAL SCIENCES OF UKRAINE**
**TECHNICAL UNIVERSITY OF DENMARK**
**VYTAUTAS MAGNUS UNIVERSITY**
**UNIVERSITY OF CASTILLA-LA MANCHA**

# SUSTAINABLE ENERGY IN AGRICULTURE

*for students of higher educational establishments in the following specialties: G11 – Industrial Mechanical Engineering; G21 – Biotechnologies and Bioengineering; H7 – Agroengineering, and J8 – Road Transport*

**Edited by Professor Gennadii GOLUB**

**Ukraine – Denmark – Spain**
**Kyiv**

**2026**

**UDC 620.92:631.371**
**LBC 40.74Ya73**

*Recommended by the Academic Council of the National University of Life and Environmental Sciences of Ukraine (Protocol No. 1 of August 26, 2026) as a textbook for students of higher educational institutions in the following specialties: G11 – Industrial Mechanical Engineering; G21 – Biotechnologies and Bioengineering; H7 – Agroengineering, and J8 – Road Transport*

**Reviewers:**

***O. Zurian*** **–** Doctor of Technical Sciences, Senior Researcher, Director of the Institute of Renewable Energy of the National Academy of Sciences of Ukraine;

***G. Geletukha*** **–** Doctor of Technical Sciences, senior researcher, head of the Department of Thermophysical Problems of Heat Supply Systems of the Institute of Technical Thermophysics of the National Academy of Sciences of Ukraine, chairman of the board of the public union "Bioenergy Association of Ukraine";

***V. Myronenko*** **–** Doctor of Technical Sciences, professor, head of the Department of Automation of Technological Processes and Equipment in AIP of the National Research Center "Institute of Mechanization and Electrification of Agriculture" of the National Academy of Agrarian Sciences of Ukraine.

Sustainable energy in agriculture / *G. Golub, I. Rogovskii, A. Arabkoohsar, N. Tsyvenkova, A. Honrubia-Escribano, S. Kukharets, V. Nadykto, O. Marus*; edited by G. A. Golub. Kyiv: NUBIP of Ukraine-DTU-VMU-UCLM, 2026. 400 p.

The textbook is developed on the basis of the latest achievements and results of research work. It contains current generalizations regarding the design, calculation and operation of renewable energy systems in agricultural production. Among them are the basic concepts of renewable energy systems in agricultural production, the basics of production and use of diesel biofuels, bioethanol, production and use of biogas and biomethane, the use of straw for energy needs, the production of energy crops, the production and use of gasifiers and pyrolysis gas, the use of low-temperature heat sources, wind and solar energy, as well as bio-hydrogen.

**ISBN 978-617-8928-40-7**

© G. Golub, 2026
© NUBiP of Ukraine, 2026
© DTU, 2026
© UCLM, 2026

**CONTENT**

**INTRODUCTION** **6**
**1. RENEWABLE ENERGY IN AGRICULTURAL PRODUCTION. BASIC CONCEPTS, TERMS AND DEFINITIONS** **9**
1.1. Characteristics of visible solar radiation and patterns of infrared radiation 9
1.2. The essence of the "greenhouse" effect and "greenhouse" gases 12
1.3. Effects of global warming 16
1.4. The role of energy resources in production and housing and communal services 19
1.5. Consumption and production of energy resources in agricultural production 20
1.6. Renewable energy objects in agricultural production 24
**2. PRODUCTION OF AGRICULTURAL PRODUCTS AND BIOFUELS IN AGROECOSYSTEMS** **28**
2.1. The concept of diversified production of agricultural products and biofuels in agroecosystems 28
2.2. Setting limits on raw materials for biofuel production in agroecosystems 31
2.3. Potential of renewable energy production based on organic raw materials of agricultural production in Ukraine 35
**3. DIESEL BIOFUEL PRODUCTION** **44**
3.1. Technologies for the production of oil and diesel biofuels 44
3.2. Assessment of the raw material base of agro-industrial production of diesel biofuels with two-stage expression of seed oil 46
3.3. Production of oil for the production of diesel biofuels from algae 49
3.4. Technical support of diesel biofuel production 51
3.5. Theoretical foundations of diesel biofuel production 64
3.6. Economic efficiency of diesel biofuel production 67
**4. USE OF DIESEL BIOFUEL** **74**
4.1. Basic properties of diesel biofuel based on vegetable oils as a motor fuel 74
4.2. Operational parameters of the diesel engine operation when using diesel biofuel 77
4.3. Kinematic viscosity of diesel biofuel 79
4.4. Improving the efficiency of using diesel biofuel 82
4.5. Production inspection of the MTU operation using a two-stage heating system for diesel biofuel 89
4.6. Organizational aspects of diesel biofuel use 91
4.7. Economic efficiency of using diesel biofuel 93
**5. PRODUCTION AND USE OF BIOETHANOL** **97**
5.1. General information about bioethanol 97
5.2. Raw material base and fundamentals of the bioethanol production process 100

5.3. Fundamentals of the biotechnological process of bioethanol production 102
5.4. Technological schemes for bioethanol production 105
5.5. Production of bioethanol from cellulose-containing materials 106
5.6. Technical implementation of bioethanol production 108
5.7. Basic properties of bioethanol as a motor fuel 112
5.8. Global experience in using bioethanol 114
5.9. Prospects for the use of bioethanol in Ukraine 116
5.10. Use of bioethanol as fuel for internal combustion engines 117
5.11. Investigation of the operation of the MeMz-245 engine on fuel mixtures with bioethanol 121
**6. BIOGAS AND BIOMETHANE PRODUCTION 127**
6.1. Current trends in the development of technologies for manure removal and use 127
6.2. Current trends in the development of biogas plants 130
6.3. Analysis of methane formation in biogas plants 137
6.4. Kinetics of organic mass fermentation in biogas plants 141
6.5. The effect of anaerobic fermentation time on the specific yield of biomethane 148
**7. USE OF BIOGAS AND BIOMETHANE 155**
7.1. Energy parameters and design of a biogas plant with a rotating reactor 155
7.2. Technological process of obtaining biogas using a biogas plant with a rotating bioreactor 159
7.3. Obtaining thermal energy based on biogas 161
7.4. Cost of biomethane production in agricultural production 165
7.5. Biomethane production. Biogas purification and enrichment 169
7.6. Cogeneration plants 175
7.7. Technical and economic assessment of biomethane-based electricity production 178
**8. USE OF STRAW FOR ENERGY NEEDS 185**
8.1. General structure of energy use of grain straw 185
8.2. Straw harvesting technology 186
8.3. Technologies for the production of fuel pellets and briquettes 191
8.4. Use of straw burning boilers 196
8.5. Fuel properties of straw and other plant residues 203
**9. GROWING AND USING ENERGY CROPS 209**
9.1. Overview of major energy crops 209
9.2. Mechanization of cultivation and harvesting of energy crops 217
9.3. Fuel characteristics of wood 223
**10. PRODUCTION AND USE OF GENERATOR GAS 232**
10.1. General information about generator gas and historical aspects of the development of gasification technology 232
10.2. Fundamentals of the chemical and thermal gasification process and types of gasification processes 238
10.3. Technological schemes for generator gas production 242

10.4. World experience and practical implementation of generator gas production 247
10.5. Investigation of gasifier plants parameters 253
10.6. Prospects for generator gas production in Ukraine 261
**11. PYROLYSIS OF PLANT BIOMASS 269**
11.1. General information about the process of pyrolysis of solid plant raw materials 269
11.2. Fundamentals of pyrolysis of plant biomass 273
11.3. Technological schemes of pyrolysis of plant biomass 275
11.4. Global experience in implementing plant biomass pyrolysis technologies 280
**12. USE OF LOW-TEMPERATURE THERMAL ENERGY SOURCES 290**
12.1. Energy potential of low-temperature energy sources 290
12.2. Classification of heat pumps and their operating principle 299
12.3. Heating systems based on heat pumps 306
12.4. Non-standard solutions for storing low-temperature energy 314
12.5. Efficiency of using heat pumps in heat supply systems 318
**13. USE OF WIND ENERGY 324**
13.1. Wind power potential 324
13.2. Technical means of converting kinetic wind energy 328
13.3. Efficiency of using wind turbines 333
13.4. Environmental and economic aspects of wind farm use 336
13.5. Atypical wind generator designs 338
**14. SOLAR ENERGY 345**
14.1. General characteristics of solar energy 345
14.2. Solar thermal energy 350
14.3. Photovoltaic 357
14.4. Solar PV power plants developed for University of Castilla-La Mancha 367
14.5. Agrivoltaic 369
**15. PRODUCTION AND USE OF GREEN HYDROGEN 378**
15.1. General characteristics of hydrogen and methods of its production 378
15.2. Production of biohydrogen by thermochemical method 382
15.3. Production of biohydrogen by fermentation 387
15.4. Green hydrogen storage and use 390
15.5. Fuel cells 393

# INTRODUCTION

Energy resources in modern conditions are necessary both for organizing the production process itself and for meeting the needs of people. Agricultural production is also impossible without efficient provision of energy resources. The EU member states are experiencing rapid development of bioenergy, with European Union directives planning a 20% share of biomass in the energy balance by 2020.

Therefore, it is necessary and expedient to develop the production and use of biofuels, which will also contribute to increasing the level of energy autonomy and efficiency of agricultural production.

The development of biofuel production and use in agroecosystems should be carried out in traditional directions, namely:

- production and use of diesel biofuels and bio-oil;
- bioethanol production;
- production and use of biogas and pyrolysis gas (pyrogase);
- use of straw and crushed wood for thermal needs, production of briquettes from non-grain waste and sawdust.

A promising concept is the development of agricultural production, which proceeds from the fact that agriculture is an environmentally safe, diversified (multidisciplinary) production of natural food products with a wide use of organic and moderate use of mineral fertilizers, biological protection products and varieties of zoned crops. This concept provides: the development of animal husbandry, which serves as a processing industry for crop products and is a source of financial income and jobs. When adopting such a concept, technical and technological support for agricultural production should be carried out on the basis of domestic equipment, which should be purchased at the own expense of financially stable agricultural enterprises with the possible participation of the state.

At the same time, stable development of rural areas, an increase in biological diversity in agroecosystems, and the production of high-quality organic food products will also be ensured. In the future, this will lead to financial stabilization of multidisciplinary agricultural enterprises, and, accordingly, payments to the budget.

According to the concept of environmentally safe, multi-profile agricultural production, the agroecosystem should have the following structural elements, or directions of production: crop production, animal husbandry and poultry farming, processing and storage of agricultural products, production of biofuels based on bioenergy crops.

Global trends, in particular research conducted by the Ministry of Natural Resources of Canada [source: http://www.nrcan.gc.ca/home], indicate that bioenergy is a renewable energy resource derived from living organisms, their by-products or plants. There are significant potential funding opportunities to help Canadian industry in the research, development and commercialization of bioenergy technologies that can serve as reliable, cost-effective and environmentally sound energy production solutions. These developments include research focused on converting biomass into energy and fuel that can be used to meet energy needs in industry, transport, agriculture, and residential heating. Through cooperation with industrial enterprises and in

scientific institutions and educational institutions, biogas (gasification and anaerobic digestion), biofuels, biomass resources (biomass for gas, catalytic conversion and compaction of biomass) are studied.

Bioenergy technologies are widely used in Denmark [source: https://stateofgreen.com/en], thus, the following areas of bioenergy are actively developing there: agricultural biomass, liquid biofuels, biogas, fuel cells (briquettes and pellets). Moreover, the use and development of bioenergy technologies are provided by facilities and institutions, both business and the public sector. They are also actively introducing the above-mentioned direction into the educational process. Thus, the Faculty of Agricultural Sciences of Aarhus University (DJF) and the National Laboratory for the study of rational methods of energy production of the Danish Technical University (DTU) conduct active scientific and educational work on obtaining energy from raw materials of agricultural origin.

Overall, in the European Union, energy from biomass accounts for up to 70% of energy from all renewable sources. Biomass and waste produce up to 15% of the EU's thermal energy and up to 4% of electricity.

In England, the company Bioenergy Crops [source: http://www.environmental-expert.com/training] initiates and conducts trainings on bioenergy and its impact on the environment, including in agricultural production.

The German Center for Environmental Research – UFZ is engaged in the active development of bioenergetic systems [source: http://www.ufz.de].

In Poland, the Silesian University of Technology has educational programs on "Bioenergy systems" in the field of biomass gasification, as well as combined electricity and heat generation [source: http://www.polsl.pl/en/strony/0_welcome.aspx].

The experience of the European Union is the use of not only energy raw materials from landfills, agricultural or woodworking production, but also specially grown fast-growing energy crops. Many of such plants are known in the world – poplar, willow, acacia, needleless rose, Jerusalem artichoke, sunflower, millet, sorghum, cane, miscanthus, falaris, hemp, cane and many others.

The United States has extensive experience in implementing the disciplines of "Bioenergy systems in the educational process". For example, Montana State University has an interdisciplinary system "Sustainable food and bioenergy systems", [source: http://sfbs.montana.edu/index.html], which also corresponds to our textbook "Renewable Energy in Agricultural Production".

It is extremely interesting the educational experience of the Biomass Energy Center in Pennsylvania (USA) [source: http://bioenergy.psu.edu/resources.asp], which is created on the basis of two educational establishments: Institutes of Energy and the Environment [source: http://psiee.psu.edu/] and the Environment and Natural Resources Institute [source: http://agsci.psu.edu/enri]. They develop, for example, the following areas: characteristics of biomass as fuel for heating, joint combustion of biomass with coal, production of fuel pellets from biomass, use of diesel biofuels in engines, and biogas technologies.

Currently, many universities in Ukraine conduct training sessions in the field of renewable energy. In particular, at the Department of Renewable Energy Sources of

the National Technical University of Ukraine "Sikorsky Kyiv Polytechnic Institute" in the preparation of bachelors in Electrical Engineering and Electrical Technologies in the field of "Non-traditional and renewable energy sources". At the National Aerospace University named after M. Ye. Zhukovsky "Kharkiv Aviation Institute" training of specialists in the specialty "Non-traditional and renewable energy sources" is carried out at the Department of Power Installations and Engines of Spacecraft. Similar areas of student training also exist in other universities.

The direction "Renewable energy in agriculture" is actively developing at the National University of Life and Environmental Sciences of Ukraine at the Department of Tractors, Cars and Bioenergy Systems and Department of Technical Service and Engineering Management named after M. P. Momotenko under the leadership of Professor Gennadiy Anatoliiovych GOLUB and at Polissia National University at the Department of Mechanics and Engineering of Agroecosystems under the leadership of Doctor of Technical Sciences, Professor Saveliy Mykolaiovych KUKHARETS.

The project "Improving energy efficiency and stimulating the use of renewable energy in agro-food and other small and medium-sized enterprises (SMEs) of Ukraine" is extremely interesting [source: http://www.reee.org.ua]. The project was implemented by the United Nations Industrial Development Organization (UNIDO) with the support of the Global Environment Facility (GEF). The project is dedicated to improving the efficiency of using solar, wind and biomass energy.

The textbook is prepared on the basis of the improved tutorial "Renewable Energy in Agriculture", which was tested for three years in the educational process at the Department of Technical Service and Engineering Management named after M. P. Momotenko at the National University of Life and Environmental Sciences of Ukraine and at the Department of Mechanics and Engineering of Agroecosystems at Polissia National University.

The textbook is designed to train specialists of the educational degree "Bachelor" and "Master" of engineering directions of training specialists in higher education establishments of Ukraine, which train personnel of designers for the development of machines and equipment and engineers for the operation of machines in agricultural production, as well as specialists in agricultural biotechnology and transport technologies in road transport.

The research presented in this book was carried out as part of the TREATY and COPILOT projects under the EIT HEI Initiative "Innovation Capacity Building for Higher Education", funded by the European Union. The authors express their gratitude to the European Institute of Innovation and Technology and EIT Food for their support in publishing this textbook.

# 1. RENEWABLE ENERGY IN AGRICULTURAL PRODUCTION. BASIC CONCEPTS, TERMS AND DEFINITIONS

**Lecture Plan:**


**1.1 Characteristics of visible solar radiation and patterns of infrared radiation 9**
**1.2 The essence of the “greenhouse” effect and “greenhouse” gases 12**
**1.3 Effects of global warming 16**
**1.4 The role of energy resources in production and housing and communal services 19**
**1.5 Consumption and production of energy resources in agricultural production 20**
**1.6 Renewable energy objects in agricultural production 24**


## 1.1.Characteristics of visible solar radiation and patterns of infrared radiation

One of the serious problems of our time, which concerns humanity as a whole, is global warming caused by the greenhouse effect. This effect is associated with a violation of heat exchange between the Earth, atmosphere and space.

Let us look at this process in essence. To do this, consider the spectrum of visible radiation from the Sun (fig. 1.1 and table 1.1), which was explained in 1704 by Sir Isaac Newton, an outstanding physicist, mathematician and astronomer, one of the founders of color theory and the founder of physical optics.

It is well known that visible radiation is electromagnetic waves perceived by human eye.

Above the wavelength or below the frequency of red light, there is infrared radiation, which was discovered in 1800 by the English astronomer and physicist William Herschel (fig. 1.2).

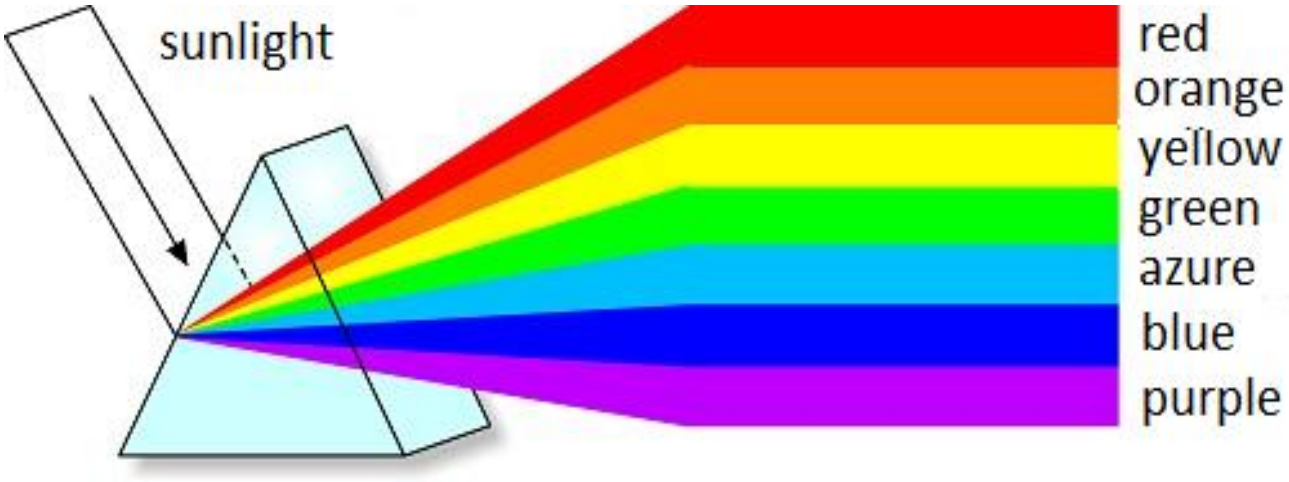


**Fig. 1.1. Sunlight entering the Earth's surface mainly belongs to the visible range**

**Table 1.1. Visible light wavelength and frequency range**

| Color | Wavelength, nm (nanometers) ($1\times10^{-9}$ m) | Frequency range, THz (terahertz) ($1\times10^{12}$ Hz) |
|---|---|---|
| Purple | 380—440 | 790—680 |
| Blue | 440—485 | 680—620 |
| Azure | 485—500 | 620—600 |
| Green | 500—565 | 600—530 |
| Yellow | 565—590 | 530—510 |
| Orange | 590—625 | 510—480 |
| Red | 625—740 | 480—400 |

Infrared radiation was obtained by William Herschel in an elegant experiment: by separating sunlight with a prism, William Herschel placed a thermometer just behind the red light of the visible spectrum and showed that in this case the temperature increases. This meant that the light falling on the thermometer was invisible to the human eye.



**Fig. 1.2. William Herschel (1738-1822)**

Below the wavelength or above the frequency of violet light, there is ultraviolet radiation, which was discovered in 1801 by the German chemist and physicist Johann Ritter (fig. 1.3).

Johann Ritter, using a prism, conducted experiments to study the chemical effect of various parts of the visible spectrum on the blackening of silver chloride. He found that blackening increases with the transition from red to violet radiation and becomes maximal beyond violet radiation. Thus, he discovered ultraviolet rays.



**Fig. 1.3. Johann Ritter (1776-1810)**

According to ISO 20473, infrared radiation is divided into three ranges: near-infrared radiation – from 780 to 3,000 Nm or from 0.78 to 3 μm, medium-infrared radiation – from 3,000 to 50,000 Nm or from 3 to 50 μm, far-infrared radiation – from 50,000 to

1000,000 Nm or from 50 to 1,000 μm. After infrared radiation, there is microwave radiation.

As an example, the view of a lion in the infrared range is shown in fig. 1.4.

Sunlight is partially absorbed by the atmosphere and reflected by the Earth's surface and atmosphere into outer space. Most of the sunlight in the form of visible radiation reaches the Earth's surface and causes it to heat up.

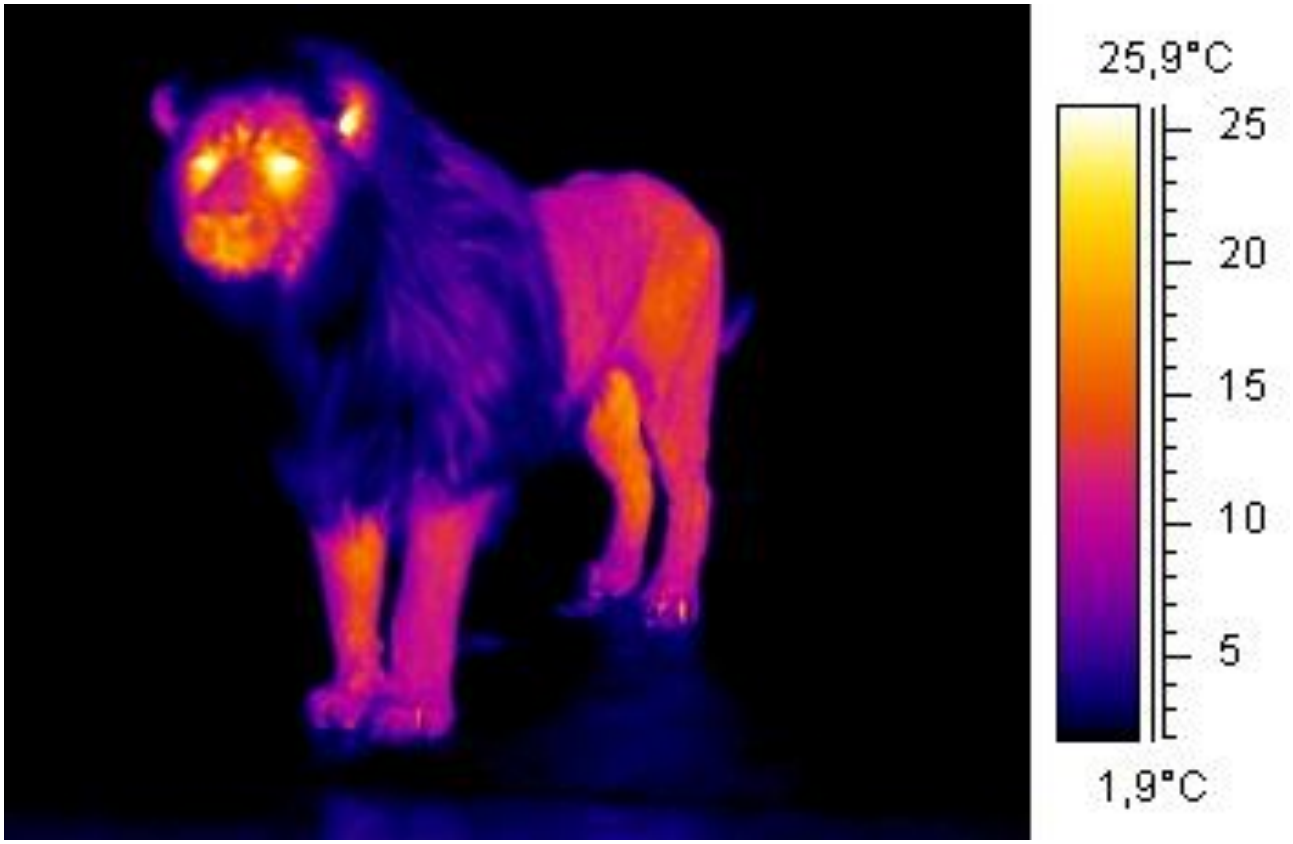


**Fig. 1.4. Infrared radiation of the lion's body [source: https://en.wikipedia.org/wiki/Infrared]**

According to the Stefan-Boltzmann law, the total energy emitted from a unit of body surface over the entire wavelength range per time unit is directly proportional to the body temperature to the fourth power:

$$E = \varepsilon\sigma_0 T^4 = \varepsilon C_0 \left(\frac{T}{100}\right)^4 = C\left(\frac{T}{100}\right)^4 \quad (1.1)$$

where $E$ – total energy radiated per unit of body surface area, W m$^{-2}$; $\varepsilon = 0\ldots1$ – emissivity of the body surface (efficiency of electromagnetic energy radiation, of both visible light and infrared radiation that is not visible to human eyes; $\sigma_0 = 5.668\cdot10^{-8}$ – Stefan-Boltzmann constant for an absolutely black body, W m$^{-2}$ K$^{-4}$; $C_0 = \sigma_0\cdot10^8 = 5.668$ – emissivity coefficient of an absolutely black body surface; $C = \varepsilon C_0 = 0\ldots5.668$ – emissivity coefficient of a gray body surface; $T$ – body temperature, $K$.

The Stefan-Boltzmann law for an ideal black body ($\varepsilon = 1$) looks like this:

$$E_0 = \sigma_0 T^4 = C_0 \left(\frac{T}{100}\right)^4 \quad (1.2)$$

According to the Stefan-Boltzmann law, the Earth's surface, like other bodies, being heated by sunlight generates infrared radiation, the intensity of which depends on the surface temperature to the fourth power.

### 1.2.The essence of the “greenhouse” effect and “greenhouse” gases

The average temperature on the Earth's surface is 14.5 degrees Celsius. The maximum temperature on the Earth's surface was plus 70.7 degrees Celsius in Iran, and the minimum temperature was minus 89.2 degrees Celsius in Antarctica [Source: http://mapme.club/poradi/4957].

Heat sources on Earth include the Sun, Earth's geothermal activity, radiation isotope decay, and burning of fossil fuels.

Infrared radiation from the Earth's surface is partially absorbed by the atmosphere and enters outer space. Another part of the infrared radiation of the Earth's surface, the amount of which depends on the presence of greenhouse gases in the atmosphere, is reflected by these gases back to the Earth's surface, causing its additional heating (fig. 1.5).

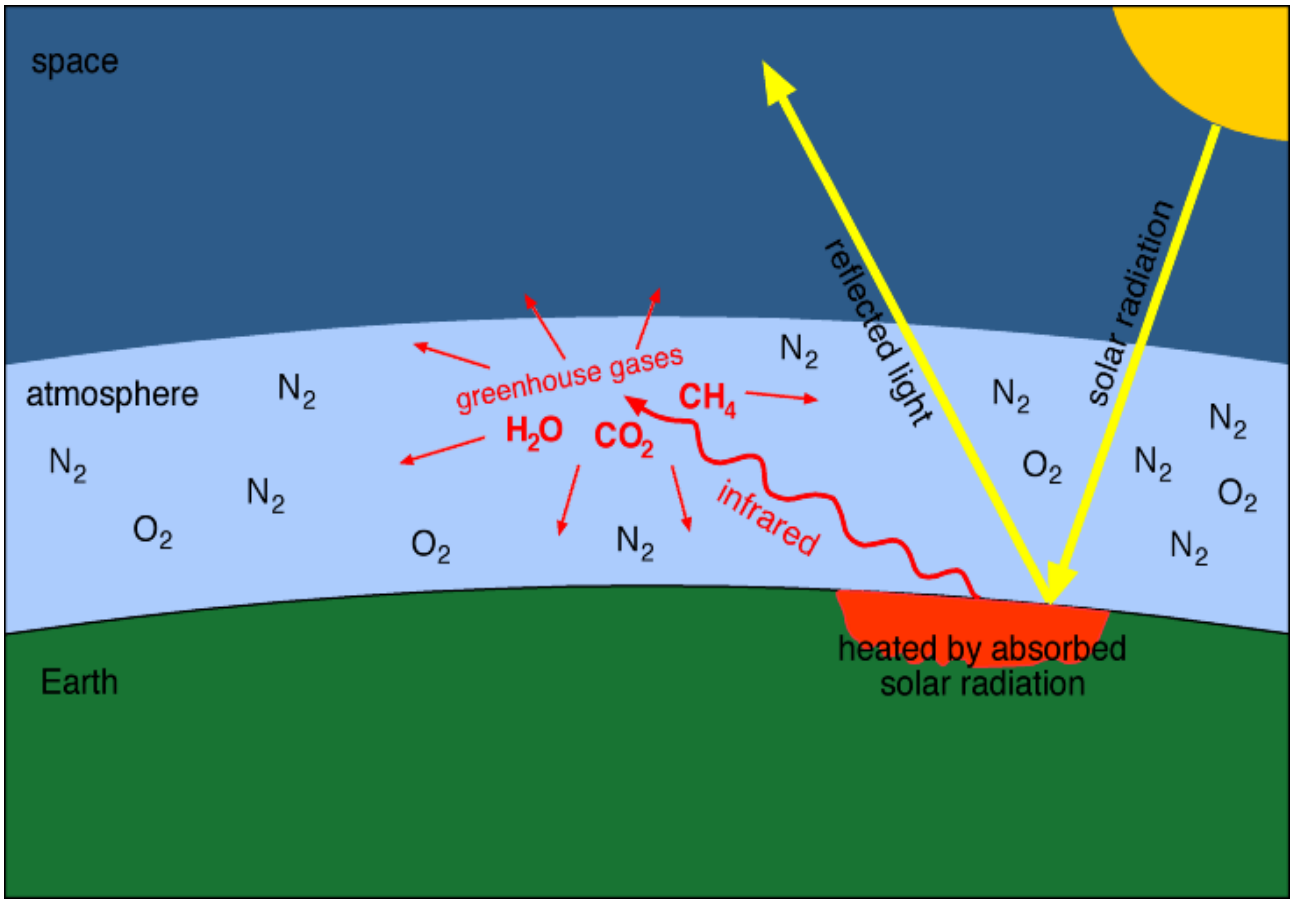


**Fig. 1.5. Interaction of the Sun, Earth and atmosphere, which leads to the appearance of a greenhouse effect [source: http://www.columbia.edu/~vjd1/greenhouse.htm]**

Solar energy and heat from the planet's depths reach the Earth's surface, causing it to heat up and cause infrared radiation from the Earth's surface. The Earth's surface heats up until a balance is established between the energy absorbed and radiated. The higher the temperature of the Earth's surface, the greater the intensity of infrared radiation.

The Earth's atmosphere contains molecules of greenhouse gases (water vapor, carbon dioxide, ammonia, and nitrogen oxides) that absorb infrared radiation and emit it again. This radiation is directed equally in all directions. Due to this, part of the thermal radiation of the Earth's surface does not pass through the atmosphere and returns to the Earth's surface.

Thus, greenhouse gases allow the visible range of sunlight to pass through and create barriers to the passage of thermal infrared radiation from the Earth's surface into space. Due to the greenhouse effect on the surface of the planet Earth, there are favorable conditions for the existence of plants, animals and human habitation.

If there were no greenhouse effect, the Earth's surface would cool sharply at night and heat up excessively during the day. Therefore, for example, on the night side of the Moon, where there is no atmosphere, the temperature drops to minus 173 degrees Celsius, and on the side facing the sun, it can reach plus 127 degrees Celsius (fig. 1.6).

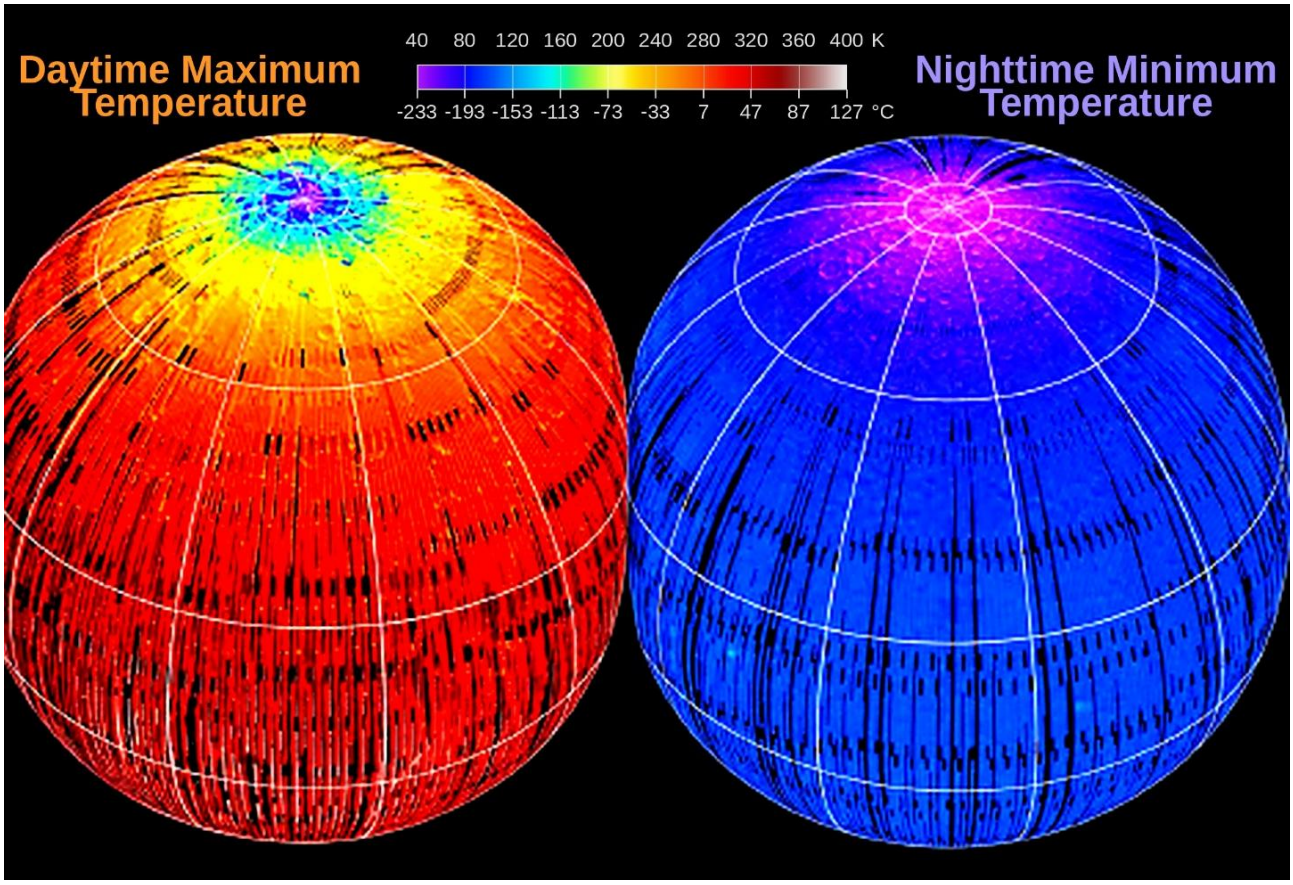


**Fig. 1.6. Temperature of the Moon on the night side and on the side facing the Sun [source: https://spacegid.com/temperatura-na-lune.html]**

The main greenhouse gas that forms the greenhouse effect is water vapor. Its share in creating a greenhouse effect reaches 80%. The water vapor molecule $H_2O$ is

lighter than nitrogen $N_2$ and oxygen $O_2$, therefore water vapor is found in the upper atmosphere. Water vapor forms a dome over the atmosphere. In addition to water vapor, greenhouse gases in the Earth's atmosphere include carbon dioxide ($CO_2$), nitrous oxide ($N_2O$), methane ($CH_4$) and other gases. The concentration of these gases has begun to increase over the past 100 years (fig. 1.7). Thus, we have an anthropogenic increase in the concentration of greenhouse gases in the atmosphere.

If we take the potency of carbon dioxide ($CO_2$) n terms of influence on the global warming as 1, the amount of methane ($CH_4$) in terms of the equivalent potency of carbon dioxide becomes 21 units, and nitrous oxide ($N_2O$) 310 units. [source: Revised guidelines for national greenhouse gas inventories. IPCC, 1996. http://www.ipccnggip.iges.or.jp/public/gl/invs1.html]

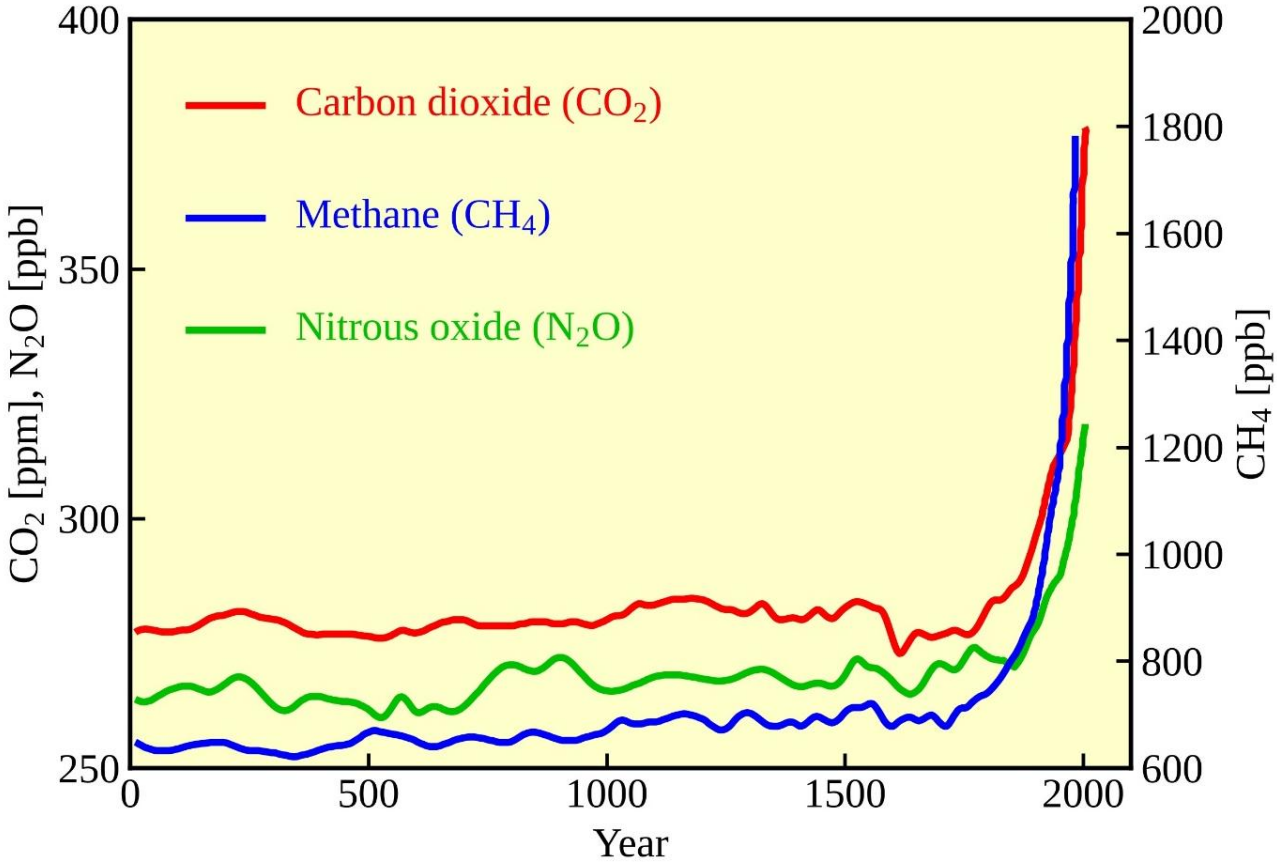


**Fig. 1.7. Change in the concentration of greenhouse gases in the Earth's atmosphere (1 ppm = 0.000001 = 1 particle per million = 0.0001%; 1 ppb = 0.000000001 = 1 particle per trillion = 0.0000001%) [source: http://ossfoundation.us/projects/environment/global-warming/natural-cycle]**

There is a close correlation between an increase in greenhouse gas concentrations and an increase in the global average temperature. By means of the example of the relationship between changes in the concentration of carbon dioxide ($CO_2$) and the global average temperature (fig. 1.8) it can be seen that since the beginning of the XX century, there has been an interrelated increase in both carbon dioxide and the global average air temperature.

The linear trend (forecast) of changes in the global average air temperature is

shown in fig. 1.9.

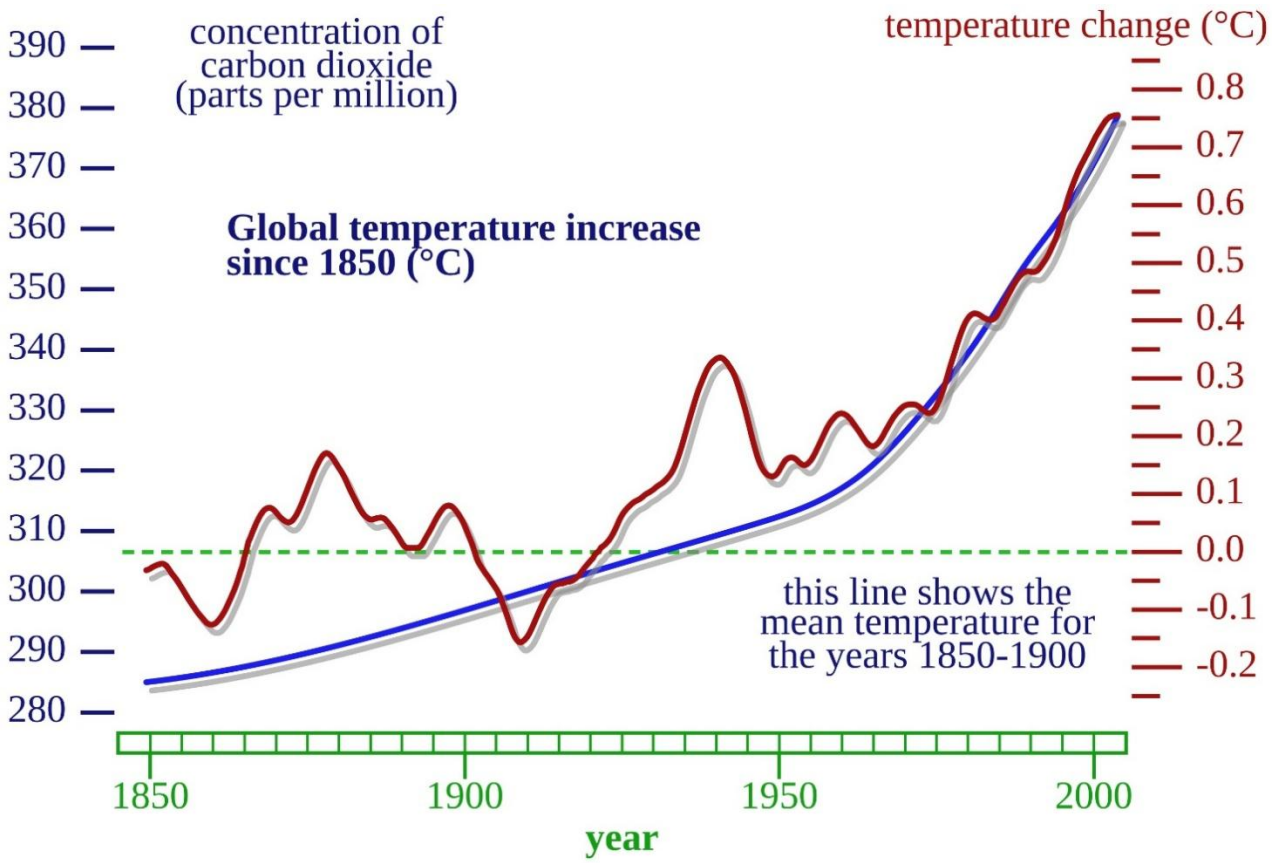


**Fig. 1.8. Relationship between changes in carbon dioxide concentration and global average air temperature [source: Americans' Problem with Global Warming by R.P. Horwitz]**

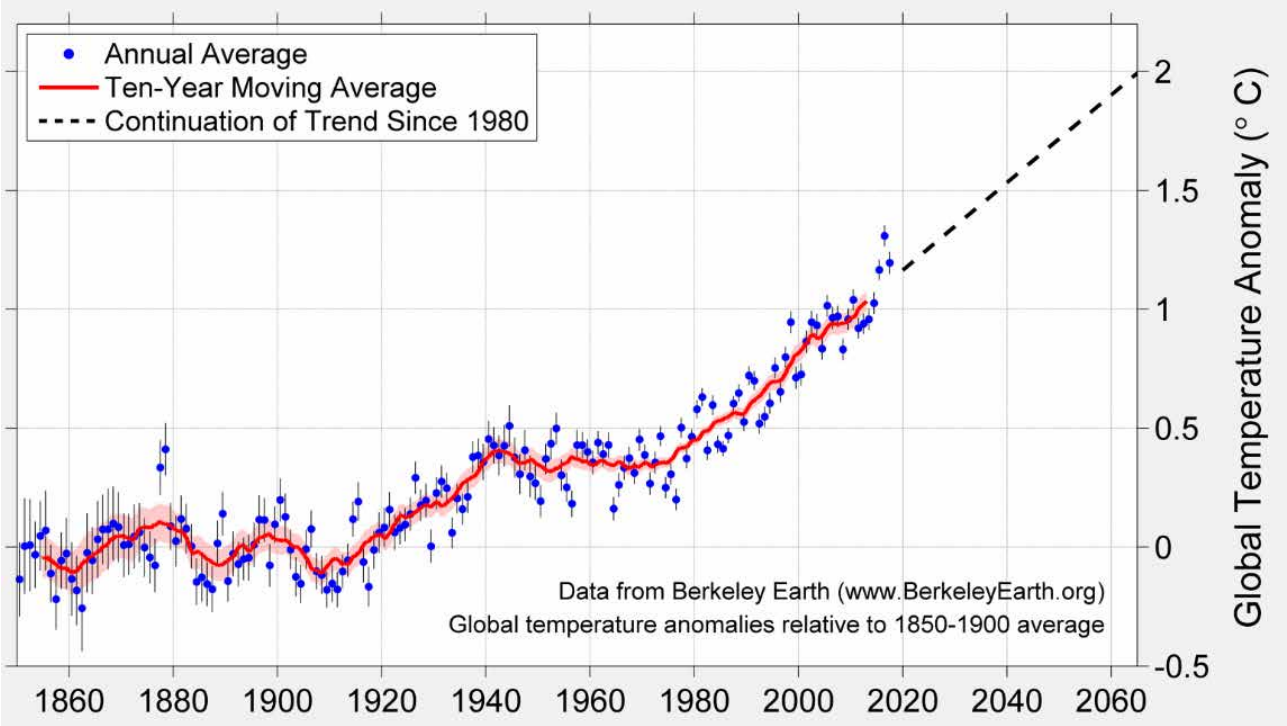


**Fig. 1.9. Forecast of changes in the global average air temperature [source: www.BerkeleyEarth.org]**

Thus, over the past century, there has been an increase in the greenhouse effect due to an anthropogenic increase in the content of greenhouse gases in the planet's atmosphere.

### 1.3.Effects of global warming

The main consequence of raising the global average air temperature due to an anthropogenic increase in the content of greenhouse gases in the planet's atmosphere is the melting of glaciers and rising sea levels (fig. 1.10). Rising sea levels will cause many negative processes in nature and human society.

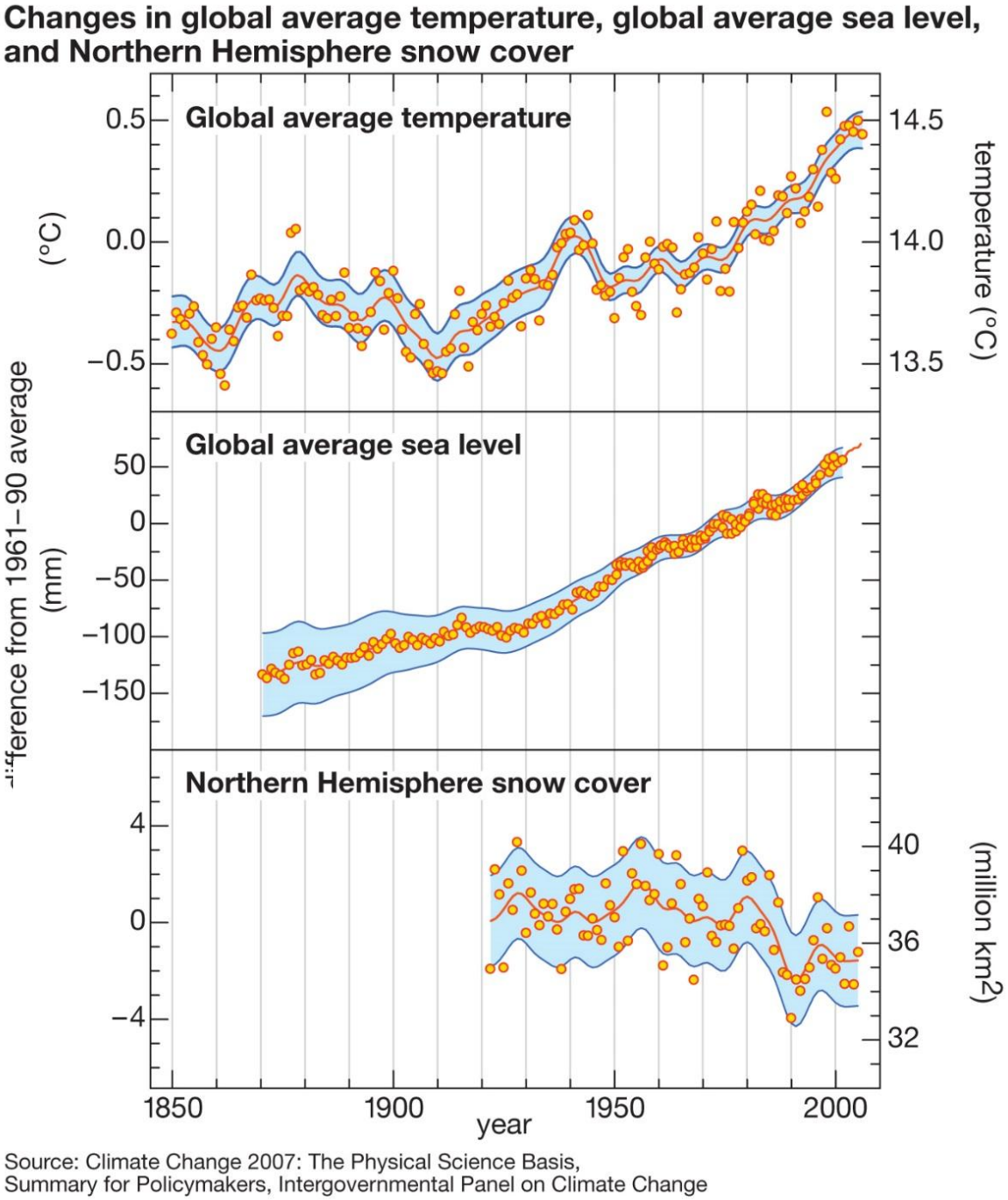


Source: Climate Change 2007: The Physical Science Basis,
Summary for Policymakers, Intergovernmental Panel on Climate Change

**Fig. 1.10. Changes in global average air temperature, global average ocean level, and Arctic ice cover**

It is well known that the amount of ice and snow on Earth is about 28 million cubic kilometers in water equivalent.

If the average temperature on the planet rises from 14 to 26 degrees, it will lead to the complete melting of glaciers. At the same time, the average level of the world's oceans on Earth will rise by about 65 meters (fig. 1.11).




**Fig. 1.11. Forecast of the view of Europe after raising the average global level of the world's oceans by 65 meters**
**[source: https://www.nationalgeographic.com/magazine/2013/09/rising-seas-ice-melt-new-shoreline-maps-b/]**

Global warming can only be prevented by reducing anthropogenic greenhouse gas emissions into the atmosphere by saving energy, reducing or completely eliminating the burning of fossil fuels, and widely using renewable energy sources.

Taking into account the specifics of Ukraine's development, Ukraine supported the Global Sustainable Development Goals until 2030, proclaimed by the United Nations General Assembly Resolution No. 70/1 of September 25, 2015.

In order to ensure the national interests of Ukraine regarding the sustainable development of the economy, civil society and the state in order to achieve growth in the level and quality of life of the population, respect for constitutional human and civil rights and freedoms, on September 30, 2019, the president of Ukraine signed decree No. 722/2019 in which he duplicated the Global Sustainable Development Goals until 2030 and outlined the main ways to achieve them.

The Sustainable Development Goals include (fig. 1.12): 1 – overcoming poverty; 2 – overcoming hunger, achieving food security and promoting sustainable agriculture;

3 – ensuring a healthy lifestyle; 4 – ensuring quality education; 5 – ensuring gender equality; 6 – ensuring sustainable water resources management; 7 – ensuring access to low-cost, reliable, sustainable and modern energy sources; 8 – promoting sustainable economic growth, employment and decent work for all; 9 – creating sustainable industrialization and innovation; 10 –reducing inequality; 11 – ensuring safety, resilience and environmental sustainability of cities and other localities; 12 – ensuring the transition to rational consumption and production models; 13 – taking urgent measures to fight against climate change and its consequences; 14 – conservation and rational use of oceans, seas and marine resources for sustainable development; 15 – protecting and restoring land ecosystems and promoting their rational use, rational forest management, fighting against desertification, ending the process of land degradation and stopping the process of biodiversity loss; 16 – promoting a peaceful and open society for sustainable development, ensuring access to justice for all and creating effective, accountable and participatory institutions at all levels; 17 – strengthening the means of implementation and revitalizing the global partnership for sustainable development.




**Fig. 1.12. The Global Sustainable Development Goals until 2030 proclaimed by United Nations General Assembly Resolution No. 70/1 of 25 September, 2015 [source: https://www.suforall.org/en/post/the-sustainable-development-goals-sdgs]**

The Sustainable Development Goals of Ukraine for the period up to 2030 are guidelines, among other things, for training specialists in order to ensure the balance of the economic, social and environmental dimensions of sustainable development.

When teaching the discipline "Renewable energy in agricultural production", the

following sustainable development goals are implemented in the training of engineering and technical specialists: 2 – promoting sustainable agricultural development; 7 – providing access to inexpensive, reliable, sustainable and modern energy sources; 13 – taking urgent measures to fight against climate change and its consequences; 15 – rational use of land ecosystems, rational forest management, fighting against desertification, stopping the process of land degradation and stopping the process of biodiversity loss.

### 1.4.The role of energy resources in production and housing and communal services

Energy resources in modern conditions are necessary both for organizing the production process itself and for meeting the needs of people engaged in this production (fig. 1.13). Agricultural production is also impossible without efficient provision of energy resources.

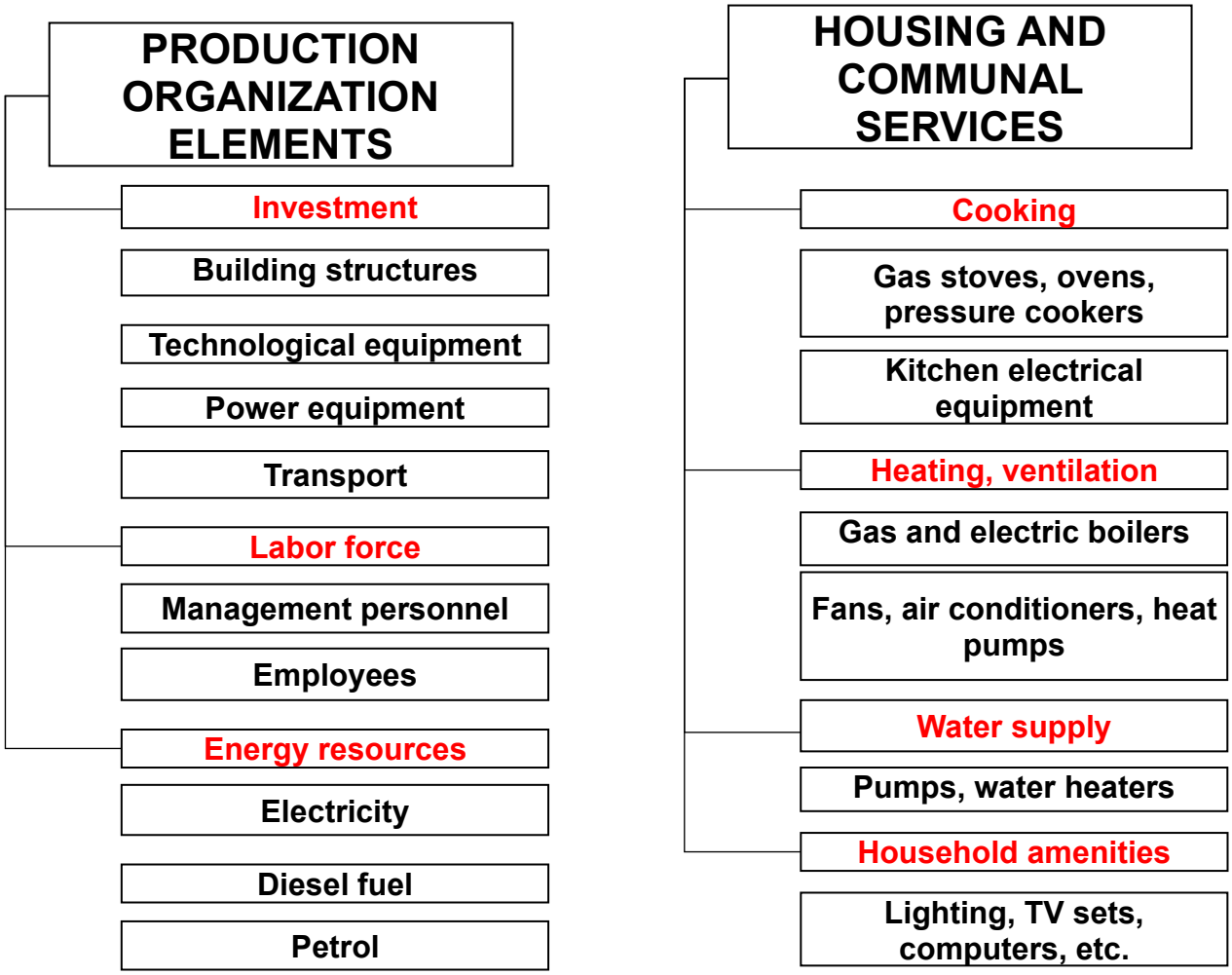


**Fig. 1.13. Scheme of energy use in production and housing and communal services**

If we analyze the consumption of energy resources in Ukraine as a whole and separately in agricultural production (table 1.2), we can conclude that agricultural production consumes a small share of coal (from 0.1 to 0.3%), natural gas (about 1%),

firewood (from 6 to 6.5 %) and electricity (about 3 %). However, gasoline consumption is between 5 and 7% of its total consumption, and diesel fuel consumption is between 20 and 30% of the country's total diesel fuel consumption.

**Table 1.2. Energy consumption in 2013 and 2019 [source: Statistical Yearbook of Ukraine]**

| Type of energy resources | Agriculture, Forestry and Fisheries | | | | | |
|---|---|---|---|---|---|---|
| | Consumed | | from the total number in % | | in natural units | |
| | 2013 | 2019 | 2013 | 2019 | 2013 | 2019 |
| Total, mln. t of conventional fuel | 165.7 | 102.3 | 1.9 | 3.1 | 3.15 | 3.17 |
| Coal, mln. t | 71.3 | 42.4 | 0.1 | 0.2 | 0.0713 | 0.085 |
| Natural gas, bln. $m^3$ | 49.7 | 27.8 | 1.1 | 0.9 | 0.55 | 0.25 |
| Motor gasoline, ths. t | 4021.8 | 1711.6 | 4.6 | 6.5 | 185 | 111.25 |
| Diesel fuel, ths. t | 6165.2 | 5791.7 | 22.1 | 27.7 | 1362.5 | 1604.3 |
| Firewood for heating, ths. $m^3$ | 2892.5 | 4114.7 | 6.4 | 6.2 | 185.12 | 255.1 |
| Fuel briquettes and pellets, ths. t | – | 478.1 | – | 9.8 | – | 46.85 |
| Electricity, mln. kW per h | 137560 | 88795.2 | 2.85 | 2.7 | 3931 | 2405.3 |

In order to bring different types of fuel to the same amount of energy value, an energy equivalent is used, which is called conventional fuel. It should be noted that the calorific value of 1 kg of hard coal, which is 29.3 MJ or 7,000 kcal, was previously taken as a unit of conventional fuel (CF). The International Energy Agency takes the oil equivalent as a unit of conventional fuel, usually denoted by the abbreviation TOE (Tonne of oil equivalent). One tonne of oil equivalent is equal to 41.868 GJ or 11.63 MW/h, or 10,000 kcal. In connection with integration into the European Economic Area, Ukraine uses the energy equivalent of TOE.

### 1.5. Consumption and production of energy resources in agricultural production

If you look at the dynamics of energy consumption in agriculture (table 1.3) in recent years, there has been a slight increase in the consumption of liquid diesel and solid (firewood and coal) fuel. There is a decrease in the use of natural gas and gasoline. Electricity consumption remains stable and depends on seasonal factors.

The consequences of a rise in the price of motor fuel (an increase in the price of fuel by 1 UAH/kg leads to additional costs in agricultural production in the amount of

1.3 to 1.5 bln. UAH) have a serious impact on the efficiency of agricultural production. Gaseous fuel is also becoming more expensive. Thus, its price will increase from UAH 1,390 UAH/$m^3$ at the beginning of 2015 to the projected 7,670 UAH/$m^3$ at the beginning of 2017.

**Table 1.3. Dynamics of energy resources consumption in agricultural production in Ukraine**

| Resources | Years | | | | | | | | | | | | | | |
|---|---|---|---|---|---|---|---|---|---|---|---|---|---|---|---|
| | 2000 | 2005 | 2007 | 2008 | 2009 | 2010 | 2011 | 2012 | 2013 | 2014 | 2015 | 2016 | 2017 | 2018 | 2019 |
| **Diesel fuel, ths. t** | 1821 | 1540 | 1174 | 1233 | 1253 | 1201 | 1350 | 1319 | 1363 | 1278 | 1255 | 1381 | 1493 | 1545 | 1604 |
| **Gasoline, ths. t** | 506 | 888 | 299 | 289 | 216 | 232 | 224 | 204 | 185 | 152 | 142 | 145 | 137 | 125 | 111 |
| **Coal, mln. t** | 0.13 | 0.06 | 0.07 | 0.07 | 0.06 | 0.07 | 0.07 | 0.07 | 0.07 | 0.11 | 0.14 | 0.15 | 0.13 | 0.14 | 0.09 |
| **Natural gas, bln. $m^3$** | 0.27 | 0.65 | 0.54 | 0.64 | 0.60 | 0.61 | 0.69 | 0.59 | 0.55 | 0.39 | 0.33 | 0.37 | 0.38 | 0.31 | 0.25 |
| **Firewood for heating, ths. $m^3$** | 695 | 867 | 186 | 170 | 27 | 187 | 180 | 183 | 185 | 186 | 226 | 233 | 269 | 260 | 255 |
| **Electric energy, mln. kW per h** | – | 2774 | 3097 | 2916 | 2928 | 3054 | 2990 | 2829 | 3931 | 3489 | 3338 | 3512 | 2425 | 2538 | 2405 |

In addition, due to the increase in tariffs, the cost of electricity consumed in agriculture is significantly increasing (fig. 1.14).

Agricultural production, quite successfully solves the food problem due to the efficient production of crop production (fig. 1.15).

The livestock industry, which is quite energy-intensive, considering the significant cost of energy resources, is constantly reducing the level of production, especially with regard to the cultivation and maintenance of cattle (fig. 1.16).

In poultry farming, considering the significantly lower energy costs for the production of a unit of product, there is a tendency to a stable level of production (fig. 1.17).

It should be noted that agricultural production in Ukraine has an extremely low level of energy production from its own raw materials. Thus, for example, the livestock industry, having significant amounts of organic waste, does not actually produce energy. This is evidenced by the low level of biogas production, namely, an average of 8.1% of the economically feasible potential (table 1.4).

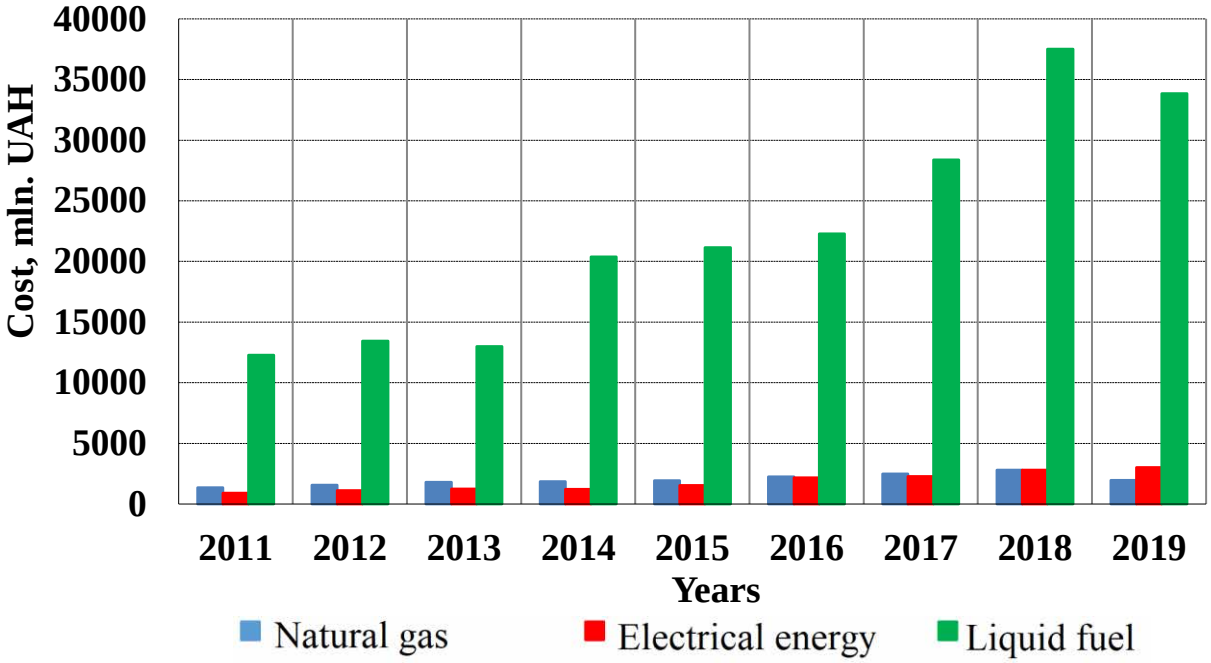


**Fig. 1.14. Cost of energy resources consumed in agricultural production [source: Acquisition by agricultural enterprises of material and technical resources for production needs; State Statistics Service of Ukraine: http://www.ukrstat.gov.ua/operativ/operativ2018/sg/pr_mt_res/arh_pr_mt_res_u.htm]**

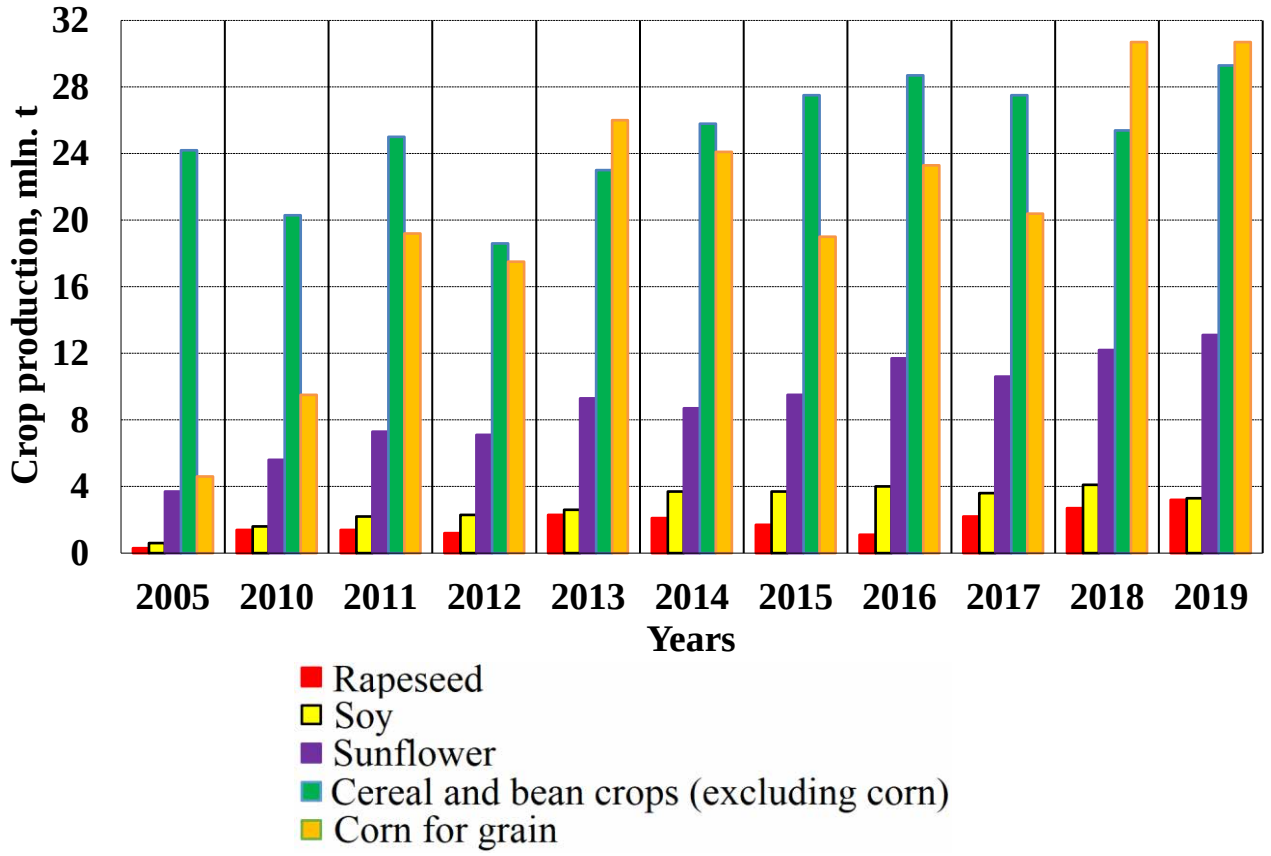


**Fig. 1.15. Production of crop products (except for fodder crops) [source: Crop Production of Ukraine 2019; Statistical collection. State Statistics Service of Ukraine. Kyiv, 2020. 183 p.]**

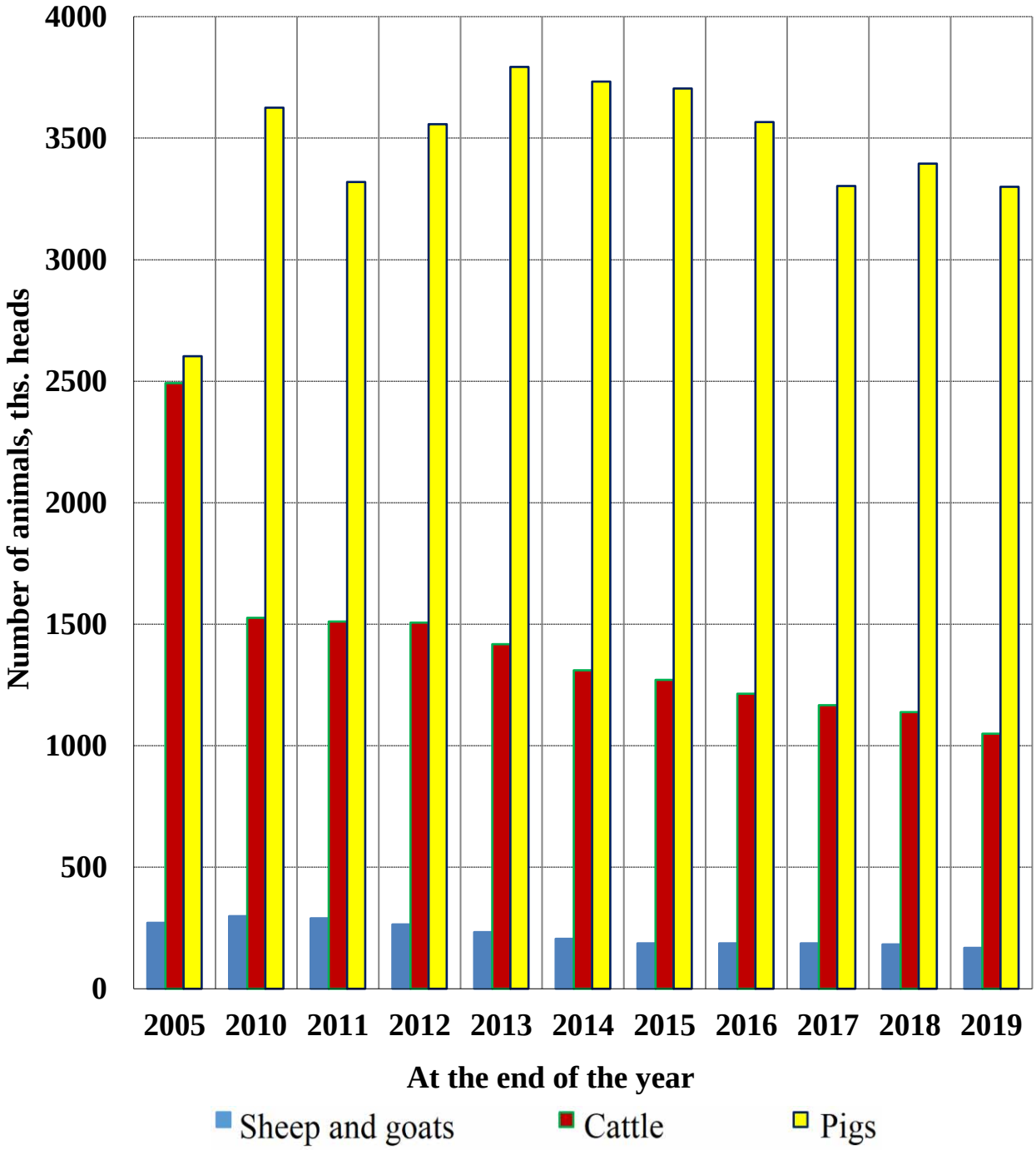


**Fig. 1.16. Dynamics of animal husbandry [source: Animal Husbandry of Ukraine 2019. Statistical collection; State Statistics Service of Ukraine. Kyiv, 2020. 158 p.]**

The economically feasible potential of crop production for the production of biofuels is quite significant, but its implementation is unsatisfactory, for example, in Ukraine, 2.2% of straw and 0.6% of corn are used for energy needs (table 1.5).

Therefore, it is necessary to increase the level of use of raw materials of agricultural origin available as energy resources, which in turn will lead to an increase in the level of energy autonomy of agroecosystems and will allow solving the energy problem while maintaining or improving the efficiency of production.

**Table 1.4. Potential of biogas production in animal husbandry (average for 2015-2019)**

| Source of raw materials | Total volume of raw materials for biogas production ths. t of dry weight | Potential of biogas production, mln. $m^3$/year | Biogas produced, mln. $m^3$/year | Harnessing the potential of biogas production, % |
|---|---|---|---|---|
| **Cattle farms** | **680.5** | **204.15** | **21** | **10.3** |
| **Pig farms** | **328.7** | **98.61** | **14** | **14.2** |
| **Poultry farms** | **915.7** | **274.71** | **12** | **4.4** |
| **Total** | **1924.9** | **577.47** | **47** | **8.1** |

**Source: own calculations**

**Table 1.5. Energy potential in crop production (average for 2015-2019)**

| Type of biomass | Energy potential, ths. t of oil equivalent | Used a biomass for energy production, ths. t | Using the energy potential, % |
|---|---|---|---|
| **Cereals (straw) except for corn** | **1530.4** | **95** | **2.2** |
| **Leguminous crops** | **117.6** | **4** | **1.2** |
| **Corn** | **6,107.4** | **110** | **0.6** |
| **Soybeans** | **848.3** | **2** | **0.1** |
| **Rapeseed and colza** | **1,101.5** | **120** | **3.9** |
| **Sunflower** | **5,855** | **25** | **0.2** |
| **Total** | **15,560.1** | **356** | **0.8** |

**Source: own calculations**

Solving the problems of functioning of the agroecosystem is a scientific problem that is caused by the fact that an increase in the production of consumer products (solving the first problem) and an increase in energy production (solving the second problem), leads to a deterioration in the ecological state of the agroecosystem, which is primarily expressed in the dehumification of the soil environment. In other words, a comprehensive solution to these problems requires overcoming the contradiction that an increase in food production or energy production and consumption leads to a violation of the ecological balance and deterioration of the environment.

### 1.6.Renewable energy objects in agricultural production

Taking into account the fact that the EU member states are experiencing particularly rapid development of bioenergy systems, the European Union directives plan the share of biomass in the energy balance at the level of 20% by 2020.

The development of renewable energy should be carried out in traditional directions (fig. 1.18), namely:

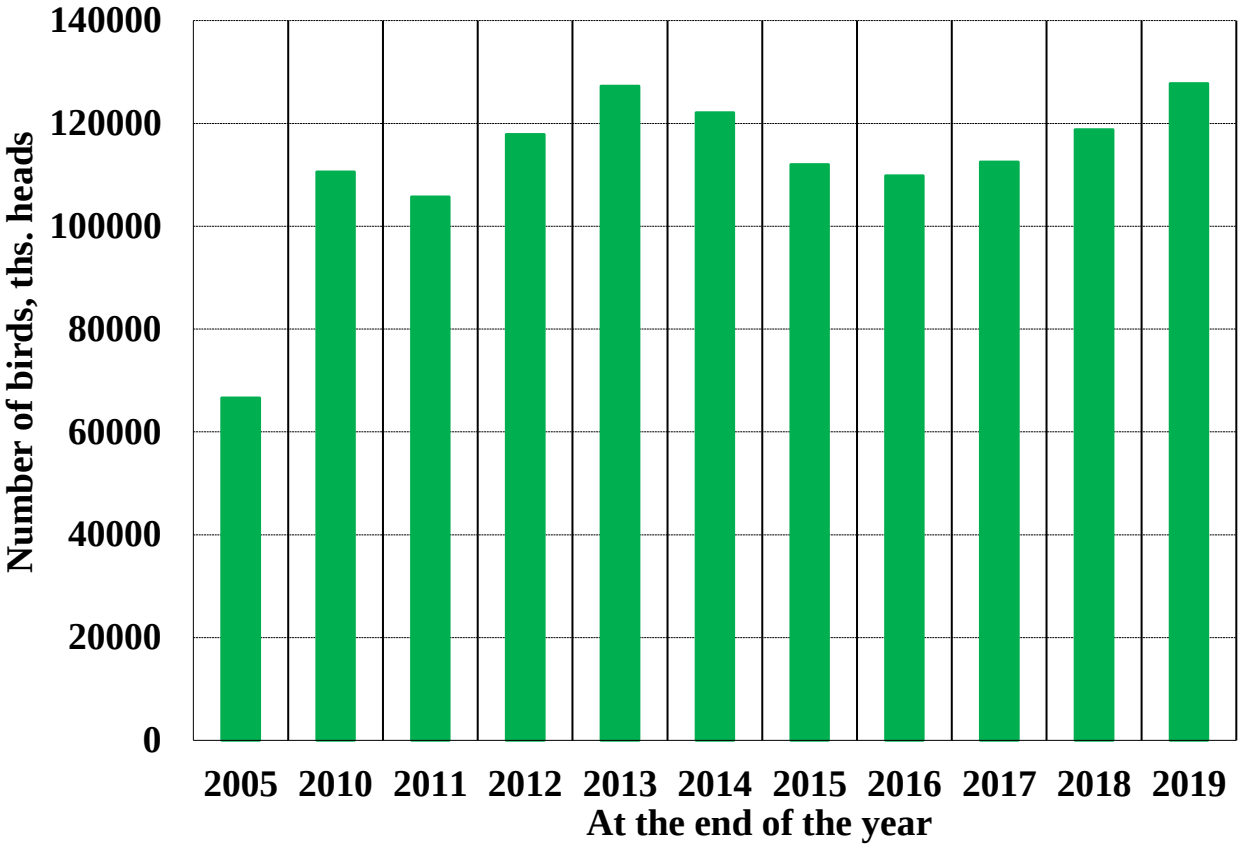


**Fig. 1.17. Dynamics of quantity [source: Animal Husbandry of Ukraine 2019. Statistical collection. State Statistics Service of Ukraine. Kyiv, 2020. 158 p.]**

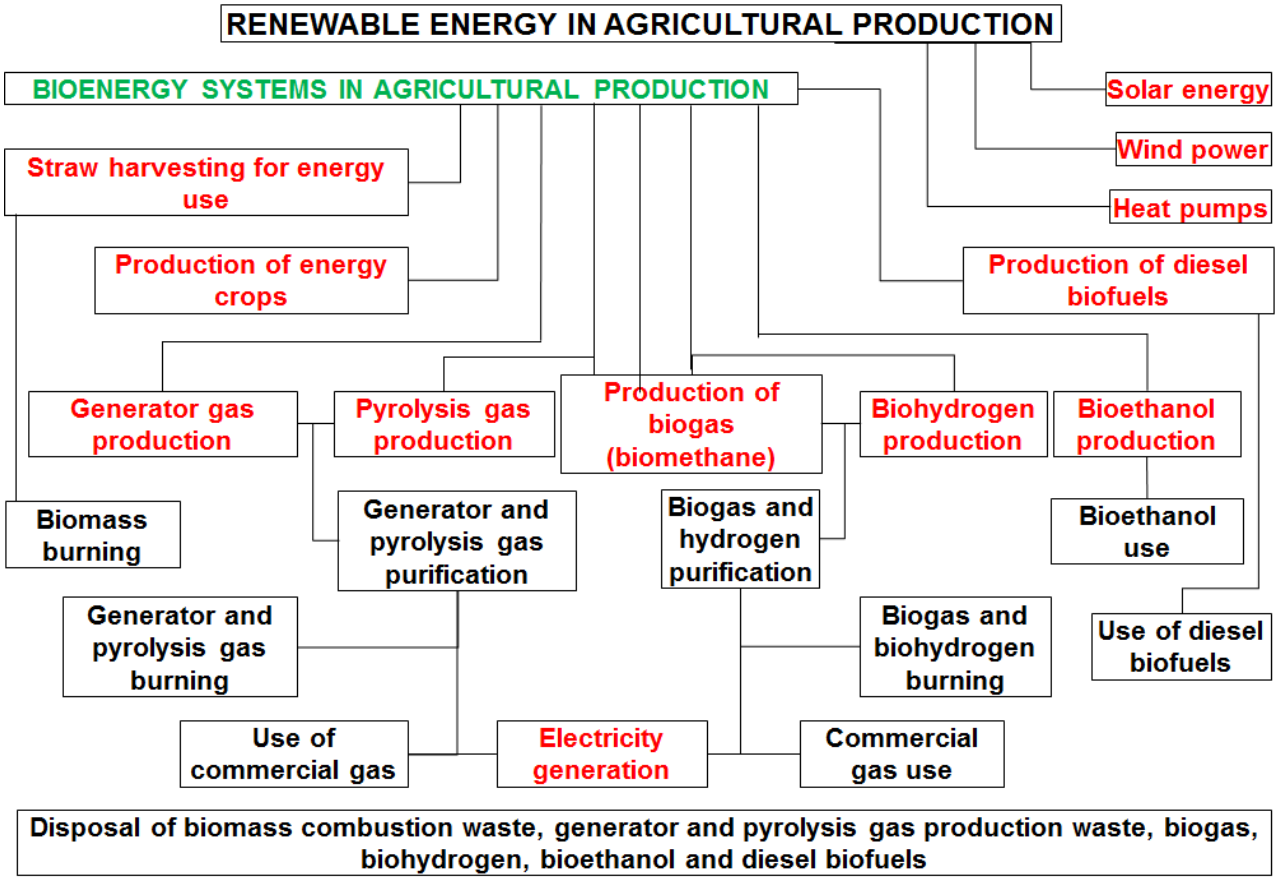


**Fig. 1.18. Renewable energy objects in agricultural production**

– production and use of diesel biofuels and bio oil;
– bioethanol production;
– production and use of biogas and generator gas;
– use of straw and crushed wood for thermal needs, production of briquettes from non-grain waste and sawdust.

In Ukraine, it is also necessary and expedient to develop the production and use of biofuels, which will contribute to improving the level of energy autonomy and efficiency of agricultural production.

It is appropriate to use solar panels, wind turbines and heat pumps.

It is obvious that at the present stage, humanity has faced several urgent problems. The main ones are food, energy and environmental, the solution of which requires the most effective balance of food, raw materials and energy needs with the capabilities of agroecosystems when accumulating solar energy in the form of humus and maintaining and expanding the biological diversity of biocenoses. A comprehensive solution to these problems is aimed at overcoming the contradiction when an increase in food production or energy production and consumption leads to a violation of the ecological balance and deterioration of the state of the natural environment.

**Questions for self-assessment:**

1. Define the term technical bioenergy.
2. Specify the main features of technical bioenergy.
3. What are the features of bioenergy systems in agricultural production?
4. What renewable energy sources exist in the environment?
5. What types of biomass are used in agricultural production?
6. Define the term biogas.
7. Define the term biomethane.
8. What are the main types of solid biofuels.
9. What types of renewable liquid biofuels can be obtained in agricultural production?
10. What types of renewable solid biofuels can be obtained in agricultural production?
11. What type of production is waste-free?
12. What role do energy resources play in production?
13. What role do energy resources play in housing and communal services?
14. What is the level of energy consumption in agricultural production in Ukraine?
15. What renewable energy objects exist in agricultural production?
16. Briefly describe straw harvesting for energy use as a renewable energy object in agricultural production.
17. Briefly describe the production of energy crops as an object of renewable energy in agricultural production.
18. Briefly describe the production of generator gas and biogas as renewable energy objects in agricultural production.
19. Briefly describe the production of bioethanol and diesel biofuels as

renewable energy objects in agricultural production.

20. Briefly describe the production of such renewable energy objects in agricultural production as solar power, wind power and heat pumps.

21. In what directions should the development of biofuel production be carried out?

**References:**


1. Biofuels: technologies, machines, equipment / V. O. Dubrovin, M. O. Korchemny, I. P. Maslo et al. Kyiv : Technical Information Center "Energy and Electrification", 2004. 256 p.
2. Dubrovin V. O., Romanchuk L. D., Kukharets S. M., Grabar I. G., Los L. W., Golub G. A., Dragnev S. V., Polishchuk V. M., Kukharets V. V., Nezdvetskaya I. V., Shubenko V. O., Holubenko A. A., Tsyvenkova N. M. Prospects for the development of alternative energy in Polissya of Ukraine. Kyiv : Center for Educational Literature, 2014. 335 p.
3. Golub G. A. Agro-industrial production of edible mushrooms. Mechanical and technological basis. Kyiv : Agrarian Science, 2007. 332 p.
4. Golub G. A. Bioenergoconversion of organic raw materials of agrocenoses with ensuring energy autonomy of production. *Mechanization, greening and conversion of biological raw materials in animal husbandry*. 2008. Iss. 3 (3). P. 3–7.
5. Golub G. A. Technical and technological support of energy autonomy of agroecosystems. *Scientific Bulletin of the National University of Life and Environmental Sciences of Ukraine. Series: Engineering and Energy of Agro-industrial Complex*. 2010. Vol. 144, Part 4. P. 303–312.
6. Golub G. A., Kukharets S. M., Yarosh Y. D., Kukharets V. V. Integrated use of bioenergy conversion technologies in agroecosystems. *INMATEH – Agricultural Engineering*. 2017. Vol. 51, No. 1. P. 93–100.
7. Golub G. A., Targonia V. S. Technical support of organic production of agricultural products and biofuels. *Mechanization, greening and conversion of biological raw materials in animal husbandry*. 2011. Vol. 2 (8). P. 66–73.
8. Kudrya S. O. Non-traditional and renewable energy sources : textbook. Kyiv : National Technical University of Ukraine "Kyiv Polytechnic Institute", 2012. 495 p.
9. Kukharets S. M. Mechanical and technological approach to the construction of agroecosystems. *Bulletin of Zhytomyr National Agroecological University*. 2014. No. 1, Vol. 1 (39). P. 187–197.
10. Kukharets S. M., Golub G. A. Ensuring energy autonomy of agroecosystems based on biofuel production. *Bulletin of Zhytomyr National Agroecological University*. 2012. No. 1, Vol. 1. P. 345–352.
11. Kukharets S. M., Golub G. A. Regulation of the use of organic resources for the production of biofuels. *Agricultural machinery* : collection of scientific articles. Lutsk : Lutsk National Technical University, 2013. Iss. 24. P. 187–194.
12. Sheludchenko B. A. Introduction to the design of natural and man-made geoecosystems. Kamianets-Podilskyi : Podillia State Agrotechnical University, 2014. 170 p.

# 2. PRODUCTION OF AGRICULTURAL PRODUCTS AND BIOFUELS IN AGROECOSYSTEMS

**Lecture Plan:**

**2.1 The concept of diversified production of agricultural products and biofuels in agroecosystems 28**
**2.2 Setting limits on raw materials for biofuel production in agroecosystems 31**
**2.3 Potential of renewable energy production based on organic raw materials of agricultural production in Ukraine 35**

## 2.1.The concept of diversified production of agricultural products and biofuels in agroecosystems

The concept of development of agricultural production, which proceeds from the fact that agriculture is an environmentally safe, diversified (multifunctional) production of natural food products with a wide use of organic and moderate use of mineral fertilizers, biological protection products and varieties of crops zoned in Ukraine, is promising for Ukraine. This concept ensures: the development of animal husbandry, which serves as a processing industry for crop products, and is a source of financial income and jobs. When adopting such a concept, technical and technological support for agricultural production should be carried out on the basis of domestic equipment, which should be purchased at the own expense of financially stable agricultural enterprises with the feasible participation of the state.

It will also be ensured stable development of rural areas, increase in biological diversity in agroecosystems when producing high-quality organic food products. In the future, this will lead to financial stabilization of diversified agricultural enterprises, and, accordingly, payments to the budget.

As an example of the concept of environmentally friendly, diversified agricultural production, it is shown a block diagram of diversified production of agricultural products with the production of livestock products at fig. 2.1, and at fig. 2.2 it is shown the block diagram of diversified agricultural production without livestock production for a 6-field crop rotation with a total area of 300 hectares. The presented schemes provide for: cultivation of field crops of crop rotation with the production of grain and sugar beet; harvesting of straw of grain crops and rapeseed stalks; leaving crushed corn stalks in the field in the form of mulch; production of feed for animal husbandry and aquaculture; production of animal products and aquaculture; methane (anaerobic) fermentation of manure or droppings with the production of heat and electricity from biogas; preparation and use of straw of grain crops and rapeseed stalks for thermal needs in the form of briquettes, rolls or chaff; use of grain straw, rapeseed stalks and fermented manure or manure for compost production; production of substrate for growing champignons or oyster mushrooms and mushroom production; production of diesel biofuels from rapeseed; use of glycerin sludge for thermal needs or its anaerobic fermentation.

The above mentioned structural models provide for the production of diesel

biofuels and bioethanol in the agroecosystem in the amount necessary to ensure the operation of mobile equipment, biogas, generator gas, and solid biofuels from straw (straw rolls, pellets, and briquettes).

In these models of agroecosystems, biogas is used to generate electricity and heat. Part of the plant biomass in the form of rolls or chaff is used to generate heat. Part of the plant biomass (straw) is used for the production of pellets from which generator gas is produced. Structural models of agroecosystems provide for the implementation of all agrotechnical processes at the expense of their own energy resources. The presented models of agroecosystems provide environmental sustainability by maintaining the humus balance and economic efficiency by maximizing profits.

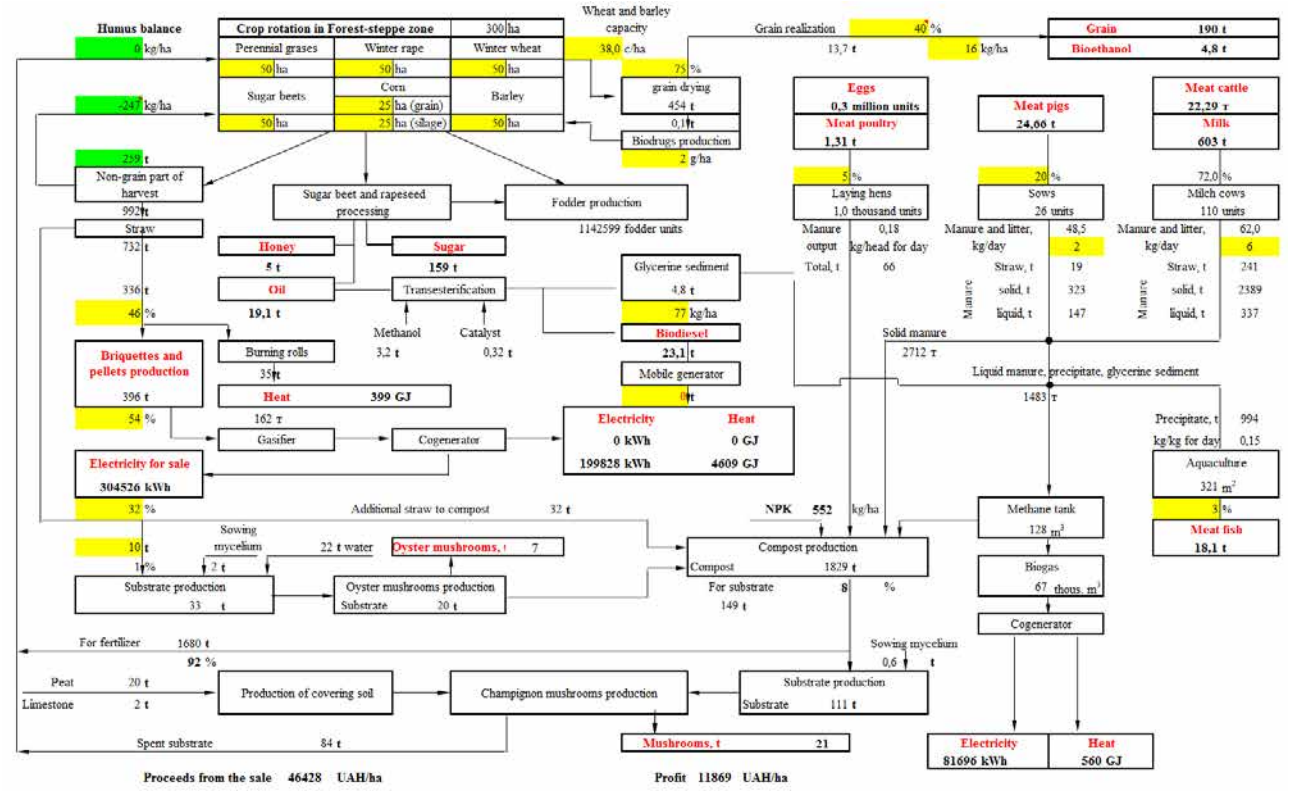


**Fig. 2.1. Block diagram of diversified production of agricultural products and biofuels in the agroecosystem with the production of livestock products**

Straw burning provides energy that can be used for heating poultry, livestock and administrative premises, as well as drying grain. Fermentation of manure and bird droppings requires the arrangement of methane tanks and ensures the production of biogas. The use of a cogeneration unit running on biogas makes it possible to obtain 26% of electricity and 66% of heat from the total energy value of biogas. The resulting electricity can be used for the operation of a biogas unit and other needs. Thermal energy in the form of heated water can be used for heating and hot water supply.

Consumption of liquid fuel by agricultural production ranges from 50 to 110 l/ha, including gasoline from 10 to 30 l/ha. The allocation of one of the crop rotation fields for growing rapeseed will make it possible to produce from 100 to 110 liters of diesel biofuel per hectare, and since rapeseed is an excellent honey plant, it will also produce about 5 tons of honey. Depending on the situation on the market of rapeseed

and diesel fuel, the farm can decide on the sale of rapeseed and the purchase of diesel fuel, as well as the production of diesel biofuels, or make another compromise decision. During the production of diesel biofuels, glycerol sediment is formed, which is advisable to use as a liquid fuel in thermal processes, which will ensure the production of additional energy.

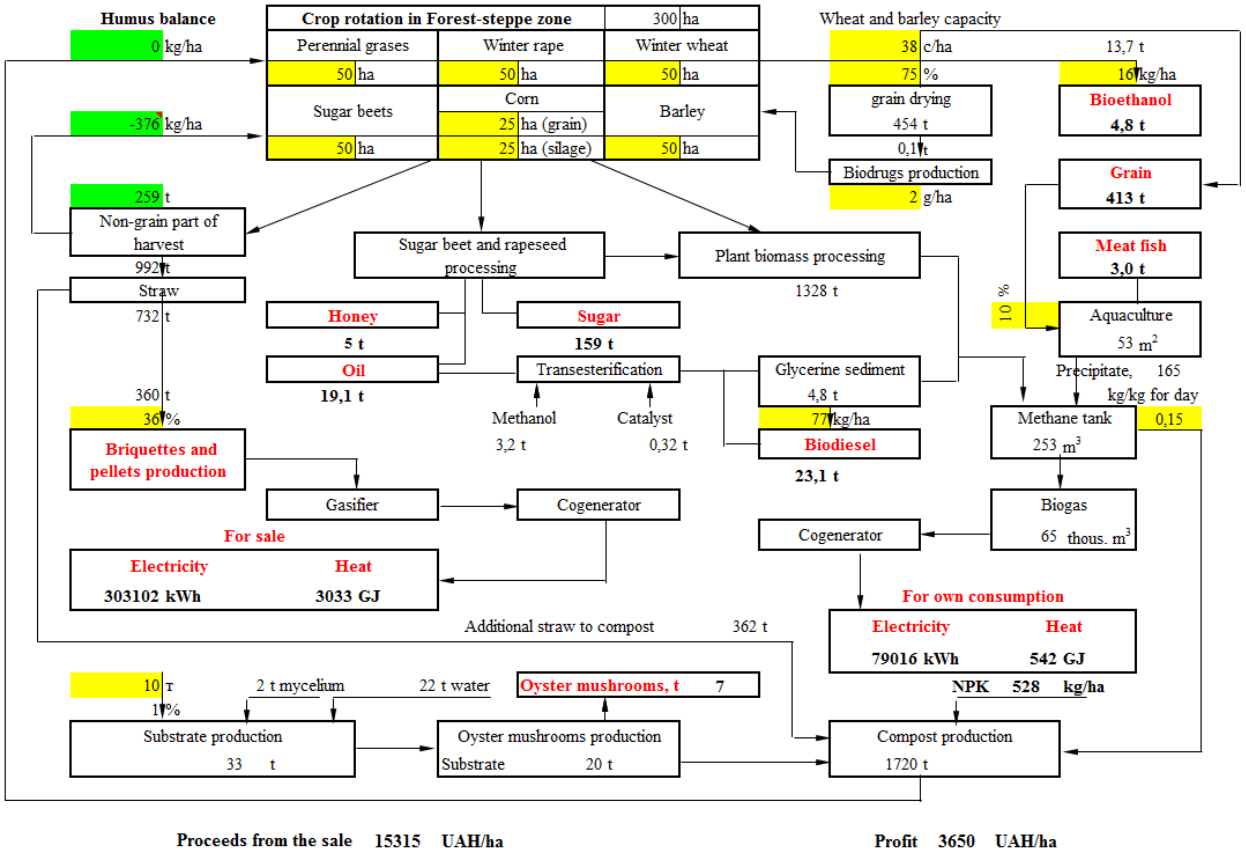


**Fig. 2.2. Block diagram of diversified production of agricultural products and biofuels in the agroecosystem without production of livestock products**

A wide network of distilling plants makes it possible to ensure the production of bioethanol in sufficient volumes for the operation of motor transport in agriculture. The demand for grain for the production of bioethanol does not exceed 10% of the total volume of sold grain or 4% of the volume of grain produced in the agroecosystem.

However, the use of the energy potential of biomass is limited by the lack of agro-industrial technologies for generating energy and appropriate machinery and equipment that are adapted to the operating conditions of specific agroecosystems (table 2.1). Moreover, it should be taken into account that reducing energy consumption, increasing the productivity of relevant machinery and equipment, their reliability indicators and compliance with agrotechnical requirements are the main directions for improving mechanization tools and equipment in technological processes of agricultural production.

Attracting accumulated solar energy to the energy balance of biological fuels as renewable resources is one of today's most urgent tasks. However, the spread of the use of biological energy resources is a rather complex process that requires additional costs to give them consumer qualities. Fuel consumers have been technologically and

technically attuned to the use of concentrated non-renewable energy sources over the past century. The transition to the use of renewable biological energy resources requires significant capital expenditures, but the annual shortage of fuel for basic field work and the need to preserve the natural environment require focusing on the development of methods and technical means to ensure the energy autonomy of agricultural production.

**Table 2.1. Mechanical and technological features of biofuel and energy production in agroecosystems**

| Advantages | Problems |
|---|---|
| **Biogas production** | |
| – production of renewable energy and environmentally friendly organic fertilizers;<br>– improving the sanitary and epidemiological state of the environment;<br>– a wide variety of raw materials that can be used for the operation of biogas units. | – stratification of the substrate mass, which significantly reduces the efficiency of methane release;<br>– high energy consumption for mixing the substrate. |
| **Obtaining thermal energy** | |
| – renewable energy production;<br>– availability of a large resource potential of raw materials available for conversion to thermal energy. | – there is no structure of the technological process of conversion (burning or processing) of the non-grain part of the crop, straw;<br>– there are no technical means for small-scale straw burning;<br>– unresolved problems of uniformity of straw combustion in the unit furnace. |
| **Production of diesel biofuels** | |
| – production of environmentally friendly fuel for diesel engines;<br>– availability of a large resource potential for the production of diesel biofuels. | – complexity of diesel biofuel production technologies;<br>– high energy consumption for mixing the emulsion. |

Processes, machinery and equipment for generating energy from agricultural raw materials should be based on waste-free production cycles based on the integrated use of natural raw materials.

In addition, it is important to formalize and assess the impact of the volume of raw materials used as energy resources on the efficiency of the agroecosystem.

## 2.2. Setting limits on raw materials for biofuel production in agroecosystems

For solid biofuels, the potential of raw materials of plant origin will be:

$$SE = \sum_{i=1}^{n} S_i u_i \left[k_S^i - \left(k_S^{iL} + k_C^i\right)\right] - \sum_{j=1}^{m} N_j T_j m_S^j, \quad (2.1)$$

where $SE$ – yield of straw, which can be used to increase the level of energy autonomy, t; $n$ – the number of crops types, un.; $S_i$ – area of growing $i$-crop; $u_i$ – yield of $i$-crop, t/ha; $k_S^i$ – coefficient of the yield of $i$-crop straw; $k_S^{iL}$ – coefficient taking into

account straw losses while harvesting and storage; $k_C^i$ – coefficient taking into account the supply of straw to restore the balance of humus; $m$ – number of species of animals and birds; $N_j$ – population of animals and birds of the $j$-species; $T_j$ – stall period of animals population and birds of the $j$-species, days; $m_S^j$ – need for straw for bedding of the corresponding animal or bird species, t/head per year.

The structure of straw use for the above two agroecosystems with and without livestock production is shown in fig. 2.3 and 2.4.

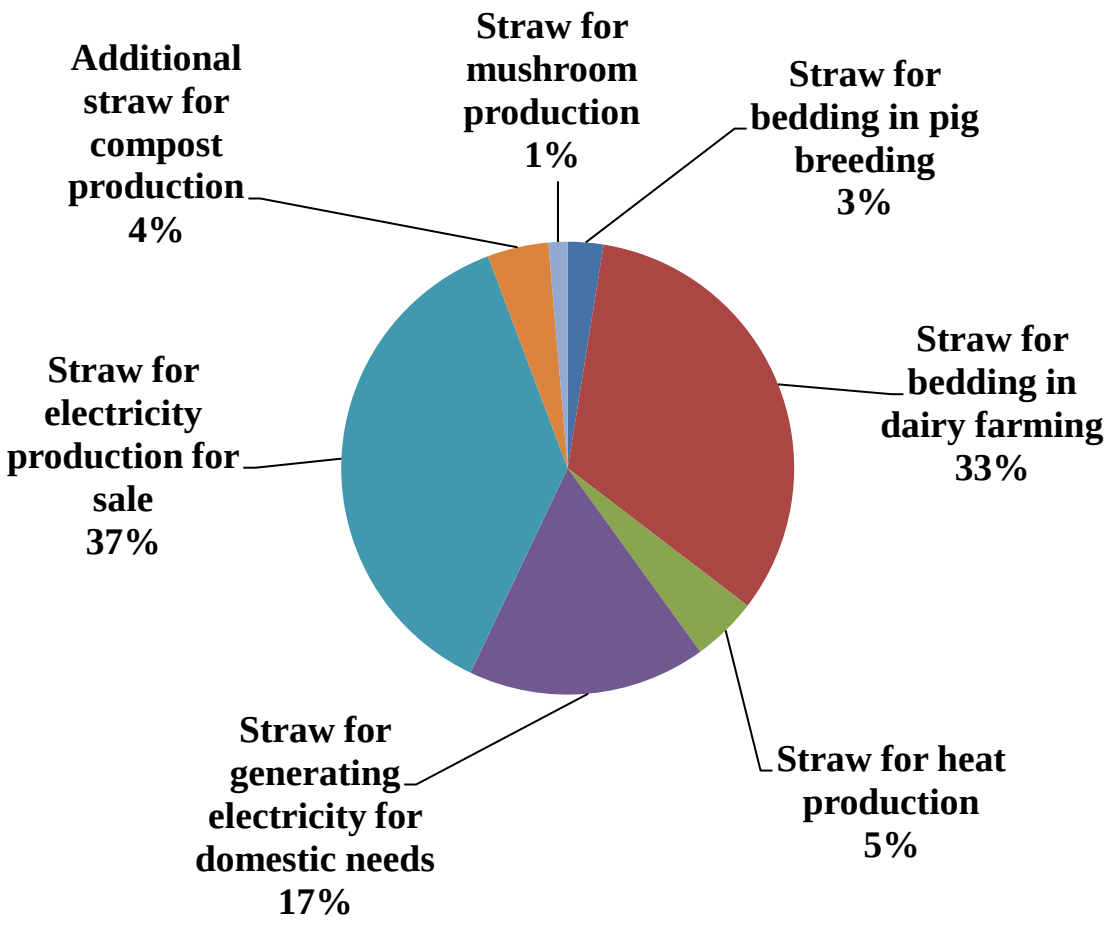


**Fig. 2.3. The structure of the straw use for the agroecosystem with livestock production**

Biomass potential of biogas production:

$$BE = k_{UM} k_{BG} \sum_{j=1}^{m} N_j T_j \left(m_M^j + m_W^j + m_S^j\right), \qquad (2.2)$$

where $BE$ – biogas output, m$^3$; $k_{UM}$ – manure recycling rate in biogas plants; $k_{BG}$ – biogas yield factor in biogas units, m$^3$/t; $m_M^j$ – mass of excrement of the $j$-th animal or bird species, t/head per day; $m_W^j$ – mass of moisture entering the excrement of the $j$-th animal or bird species, t/head per day.

It is possible to determine the needs of the agroecosystem for diesel biofuels and bioethanol on the bases of specific costs of the corresponding types of fuel per 1 ha of arable land and determine the area of cultivation of crops to provide raw materials for the production of the corresponding type of fuel:

$$S_{BD} = \frac{N_D \sum_{i=1}^{n} s_i}{u_{BD} k_{UCD} k_{BD}}, \quad (2.3)$$

where $S_{BD}$ – the area required for growing crops, which will provide the agroecosystem with raw materials for the production of diesel biofuels, ha; $N_D$ – diesel biofuel consumption rate, t/ha; $u_{BD}$ – yield of a crop suitable for the production of diesel biofuels, t/ha; $k_{UCD}$ – crop utilization rate for diesel biofuel production; $k_{BD}$ – diesel biofuel yield factor.

$$S_{BE} = \frac{BE}{u_{BE} k_{UCE} k_{BE}}, \quad (2.4)$$

where $S_{BE}$ – the area required for growing crops providing the agroecosystem with raw materials for the production of bioethanol, ha; $BE$ – bioethanol demand, t; $u_{BE}$ – yield of a crop suitable for bioethanol production, t/ha; $k_{UCE}$ – crop recycling rate for bioethanol production; $k_{BE}$ – bioethanol yield factor.

On the basis of existing indicators, which characterize agricultural production in Ukraine while recent years in general, there were also made the calculations on defining the straw volume limits, used for heating needs. This dependence defined as a percentage of the total amount of straw is as follows:

$$C^{\%} = -0.57D + 48.66, \quad (2.5)$$

where: $C^{\%}$ – is the straw amount limit from the total amount which can be used for heating needs, %; $D$ – annual humus deficiency, kg/ha.

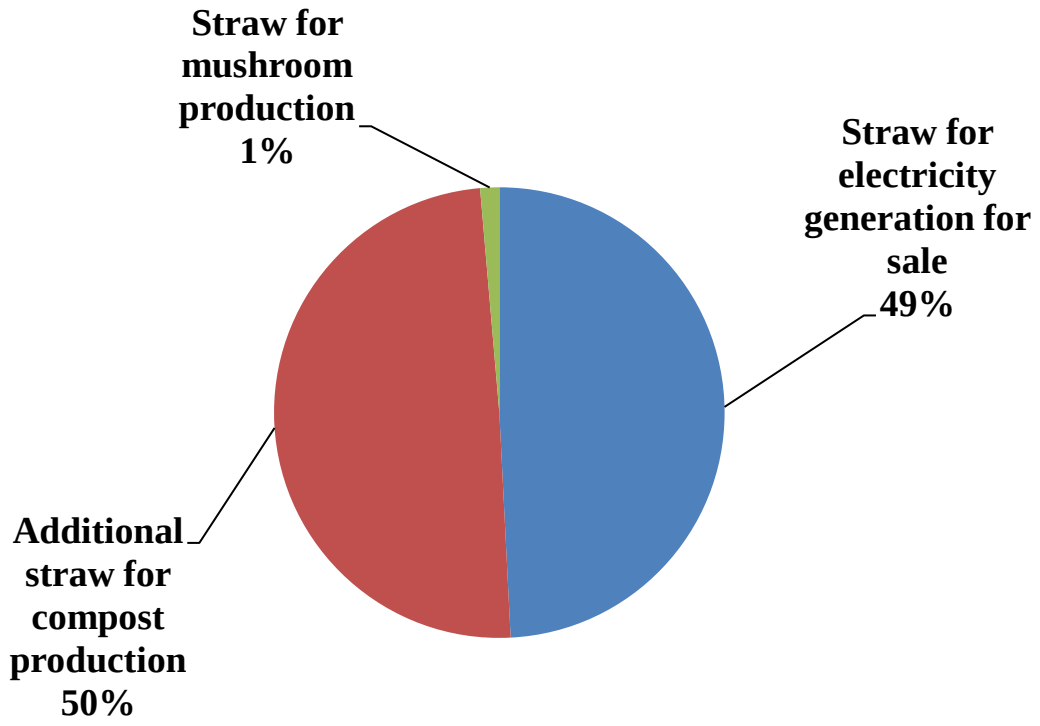


**Fig. 2.4. The structure of the straw use for the agroecosystem without livestock production**

It should be noted that with a general shortage of humus in the range from 80 to

90 kg/ha, it is no longer possible to use straw for thermal needs, provided that soil fertility is preserved. The maximum volume of straw that can be used for thermal needs, with a zero humus balance, is about 50 %.

Potential of biomass that can be used to produce generator gas is:

$$GG = k_{GG}\left(\sum_{i=1}^{n} S_i u_i \left[k_S^i - \left(k_S^{iL} + k_C^i\right)\right] - \sum_{j=1}^{m} N_j T_j m_S^j\right), \qquad (2.6)$$

where $GG$ – generator gas output, $m^3$; $k_{GG}$ – coefficient of generator gas output from straw biomass of the $i$-th crop, $m^3/t$.

The results of calculating the volume of electricity and heat for sale to other consumers based on the resources of plant biomass of agroecosystem are shown in fig. 2.5.

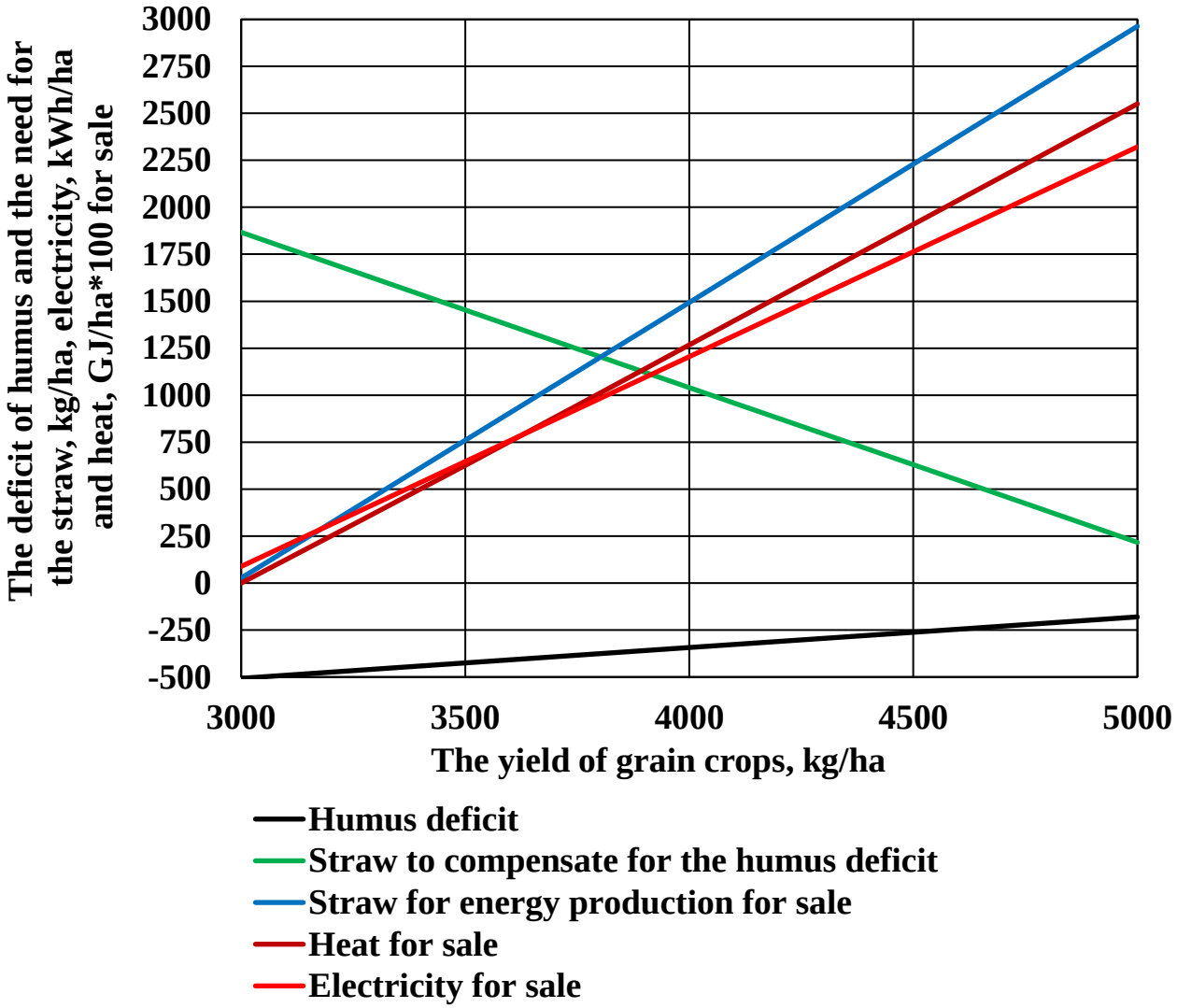


**Fig. 2.5. Dependence of the humus deficit, the need for straw to compensate for the loss of humus, the amount of straw for energy production for sale, as well as the volume of electricity and heat for sale on the average yield of grain crops for the agroecosystem without livestock production**

The analysis showed that the production of heat and electricity is largely determined by the yield of grain crops. An increase in the yield of grain crops from 3000 to 5000 kg/ha causes an increase in the intake of organic matter into the soil to a

greater extent than its mineralization, and accordingly the deficit of organic matter and humus decreases from 507 to 180 kg/ha.

When the yield of grain crops increases from 3000 to 5000 kg/ha, the volume of plant biomass (mainly straw) to compensate for the lack of organic matter and humus decreases from 1867 to 217 kg/ha. This leads to an increase in the possible volumes of plant biomass for energy production for sale from 27 to 2963 kg/ha, and, accordingly, the production of electricity from 48 to 2301 kWh/ha and heat from 0 to 25.5 GJ/ha, while meeting their own needs for heat and electricity by burning biogas in a cogeneration plant.

Thus, the development of the production and use of bioenergy systems in agricultural production should be aimed at the production and use of diesel biofuels and bio-oil, the production of bioethanol, the production and use of biogas and pyrolysis gas (pyrogas), the use of straw and crushed wood for thermal needs, the production of briquettes from non-grain waste and sawdust.

Processes, machines and equipment for obtaining energy from agricultural raw materials should be based on waste-free production cycles based on the integrated use of natural raw materials.

### 2.3.Potential of renewable energy production based on organic raw materials of agricultural production in Ukraine

Agricultural production has a significant impact on increasing greenhouse gas emissions, thanks to greenhouse gas emissions in animal husbandry and partly due to the use of fossil fuels and electricity generated on the basis of fossil fuels. The calculations performed showed the possibility of ensuring the balance of humus in the agroecosystem without animal husbandry, with the exception of aquaculture. In this case, taking into account the conversion coefficients of greenhouse gas emissions to equivalent $CO_2$ emissions (21 units for methane and 310 units for nitric oxide), the reduction of equivalent $CO_2$ emissions due to internal fermentation and during manure collection and storage will amount to 1452.2 kg/year per head for fattening cattle, 199.74 kg/year per head for fattening pigs and 6.62 kg/year per head for fattening broilers. At the same time, the production of aquaculture products is characterized by the absence of greenhouse gas emissions, which makes such production extremely promising from the point of view of preserving the environment.

The analysis is based on statistical data on the number of animals (table 2.2) and statistical data on the structure of areas and gross harvest of field crops in Ukraine (table 2.3), demonstrated in Statistical Yearbook of Ukraine for 2019. The need for straw for bedding and feeding animals was determined on the basis of animal population.

The consumption of heat and electricity by agricultural and food production was taken according to Statistical Yearbook of Ukraine for 2019.

The calculation of the biomethane yield was carried out on the basis of data given in table 2.4, taking into account the data from Biteco [https://biteco-energy.com], concerning the indicators of biomass moisture, organic matter content, organic matter decomposition level and methane content in biogas.

**Table 2.2. Livestock population and initial data for calculating the need for straw for bedding and feeding the animals**

| Name | Livestock, thousand heads | Stall-feeding period, days | Norms of straw demand for bedding, kg/head per day | Average norms of straw demand for feeding, kg/head per day |
|---|---|---|---|---|
| Cows | **1,789** | **210** | **6** | **4** |
| Young cattle | **1,303** | **210** | **6** | **2** |
| Pigs | **5,727** | **365** | **2** | **–** |
| Sheep and goats | **1,205** | **210** | **1** | **0.4** |
| Poultry | **220,500** | **365** | **–** | **–** |

**Table 2.3. Area structure and gross collection of field crops in Ukraine**

| Crop | Harvested area, thousand hectares | Gross collection, thousand tons | Yield, t/ha |
|---|---|---|---|
| **Winter and spring wheat** | **6,812** | **28,328** | **4.16** |
| **Rye** | **115** | **333** | **2.90** |
| **Winter and spring barley** | **2,609** | **8,917** | **3.42** |
| **Oats** | **182** | **422** | **2.32** |
| **Corn for grain** | **4,987** | **35,880** | **7.19** |
| **Millet** | **93** | **170** | **1.83** |
| **Buckwheat** | **69** | **85** | **1.23** |
| **Rice** | **11** | **55** | **5.00** |
| **Legumes** | **347** | **710** | **2.05** |
| **Sugar beet** | **221** | **10,204** | **46.17** |
| **Sunflower** | **5,959** | **15,254** | **2.56** |
| **Rapeseed** | **1,279** | **3,280** | **2.56** |
| **Soybeans** | **1,613** | **3,699** | **2.29** |
| **Potatoes** | **1,309** | **20,269** | **15.48** |
| **Vegetables** | **452** | **9,688** | **21.43** |
| **Forage crops** | **1,419** | **16,329** | **11.51** |
| **Total** | **27,477** | **153,623** | **–** |

Estimated humus balance based on the structure of areas and gross harvest of field crops in Ukraine in 2019 is shown in table 2.5.

It was also found that the biological yield of plant biomass is 64.3 million t. The structure of straw use in Ukraine based on the structure of areas and gross harvest of field crops in Ukraine in 2019 is shown in fig. 2.6. As a result of the analysis, it was found that ensuring a positive humus balance could be achieved when using straw in the amount of 11.7 million t for humus deficiency compensation needs. At the same time, the excess amount of straw that can be used for energy needs may amount to 7.5 million t.

**Table 2.4. Initial data for calculating the biomethane yield**

| Name | Biomass yield, million tons | Biomass moisture, % | Organic matter content, % | Organic decomposition level, % | Methane content in biogas, % |
|---|---|---|---|---|---|
| Cows | **20.7** | **91.5** | **85** | **28** | **55** |
| Young cattle | **7.1** | **90** | **85** | **40** | **55** |
| Pigs | **13.6** | **94** | **85** | **40** | **60** |
| Sheep and goats | **0.7** | **70** | **80** | **45** | **55** |
| Poultry | **0.0** | **72** | **75** | **30** | **55** |
| Glycerine precipitate | **14.1** | **85** | **75** | **50** | **65** |

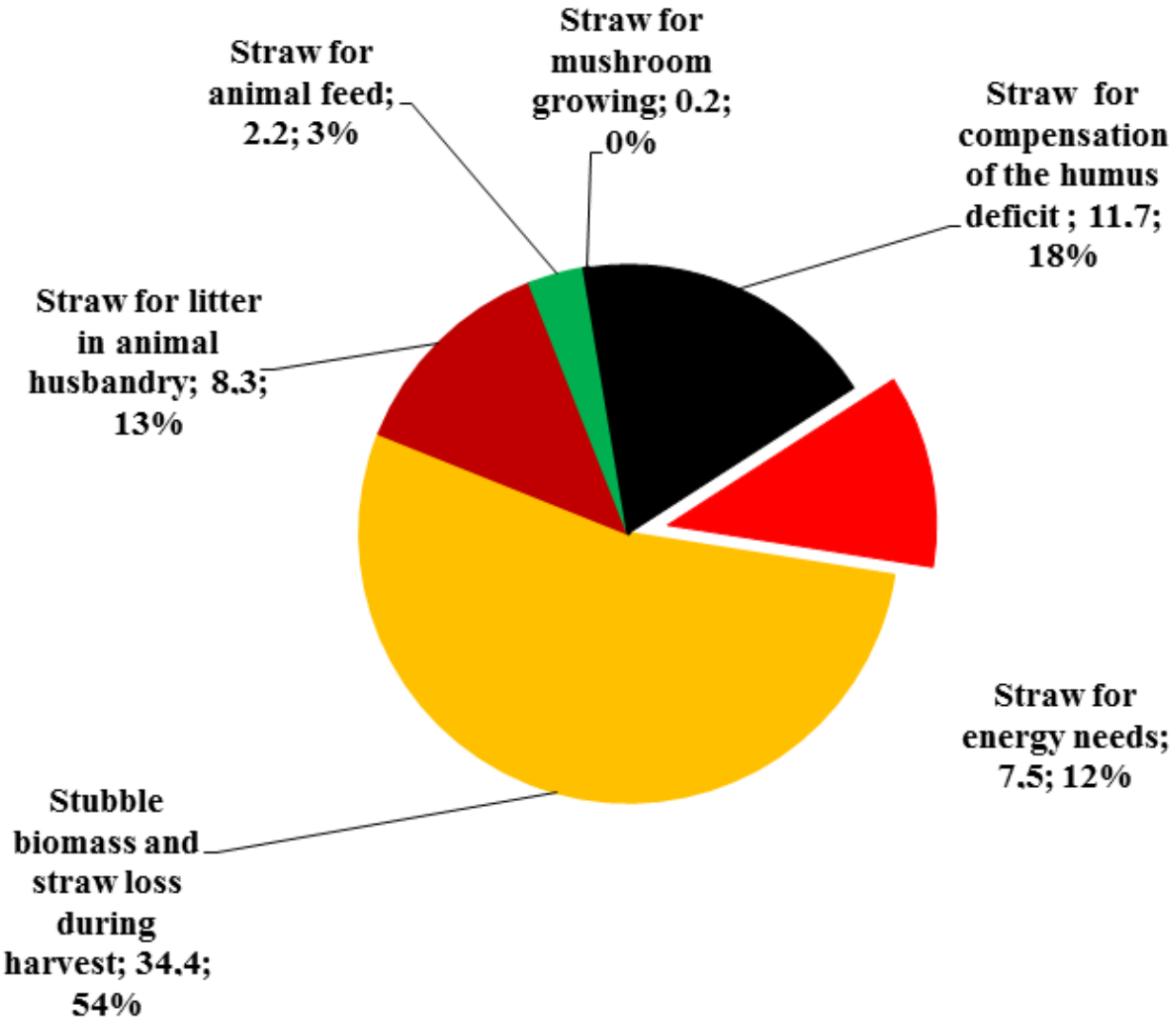


**Fig. 2.6. The structure of straw use in Ukrainian agriculture in million t**

Thus, the amount of plant biomass that can be used for energy needs, according to the data on the structure of areas and the gross harvest of field crops in Ukraine in 2019, can be about 12% of the total biological yield of plant biomass. However, it should be noted that there is a significant relationship between the total humus balance and the amount of plant biomass that can be used for energy needs (fig. 2.7). So, for example, even if the negative total humus balance is 112 kg/ha, the use of plant biomass

for energy needs becomes impossible due to the need to spend plant biomass to eliminate the negative humus balance.

**Table 2.5. Estimated humus balance based on the structure of areas and gross harvest of field crops in Ukraine in 2019, kg/ha**

| | |
|---|---|
| Mineralization of humus by field crops | **1,312** |
| Humus intake due to humification of root residues | **832** |
| **Humus deficiency** | **480** |
| Humus intake due to biomass humification of: | |
| stubble and straw lost during harvesting | **183** |
| weeds and green manure | **93** |
| manure and droppings | **135** |
| Total humus intake | **1,244** |
| **Total humus balance** | **-64** |

The analysis also showed that the maximum amount of straw for energy needs cannot exceed 19.2 million t with a deficit-free humus balance in crop rotation due to the need to use straw for other priority needs, which is 29.8% of the biological yield of plant biomass of field crops.

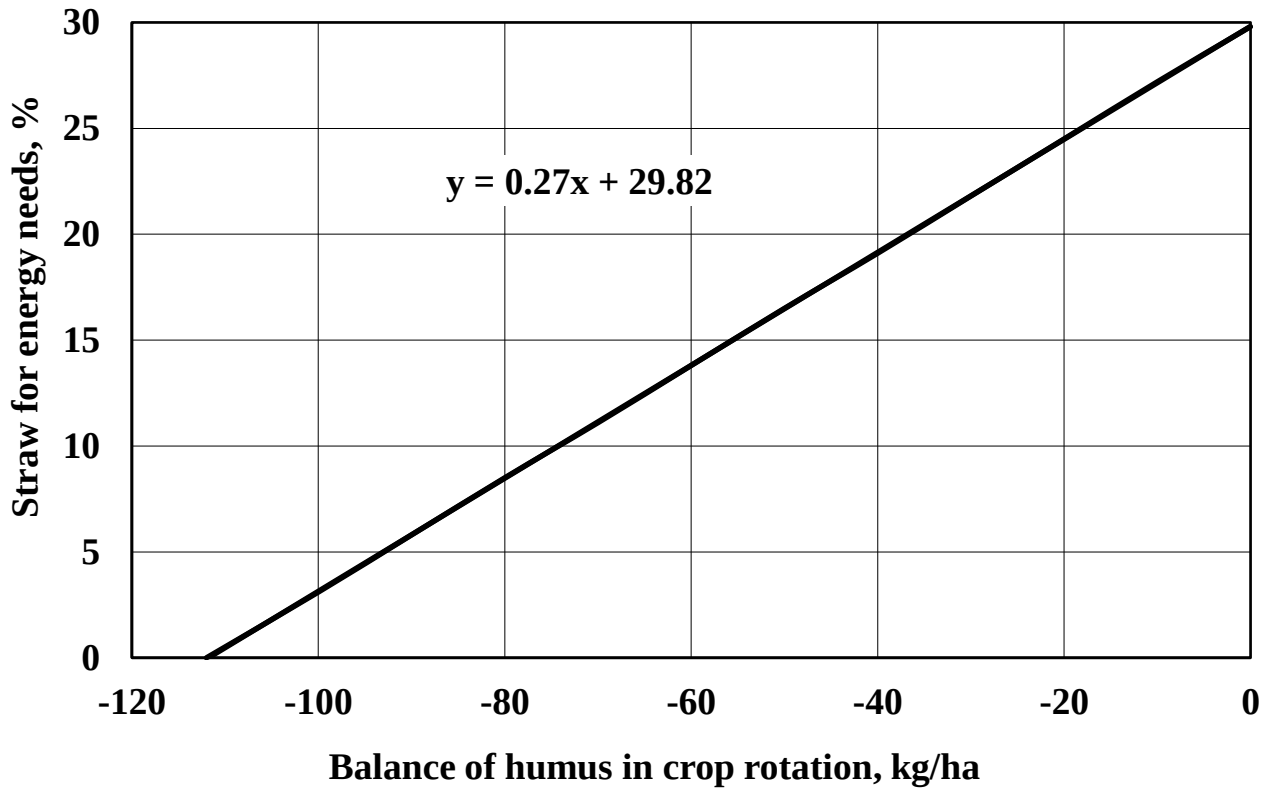


**Fig. 2.7. Relationship between relative volumes of straw for energy needs and the general balance of humus in crop rotation**

It is also established that for the areas and structure of the gross harvest of field crops in Ukraine, which has developed recently, an increase in the use of straw for

energy needs can be ensured only by increasing green manure crops in crop rotation (cover crops in crop rotation).

The analysis showed (fig. 2.8) that only if at least 40% of the sown area in the crop rotation will be under green manure, it is possible to use the maximum amount of straw for energy needs, namely 29.8% of the biological yield of plant biomass of field crops.

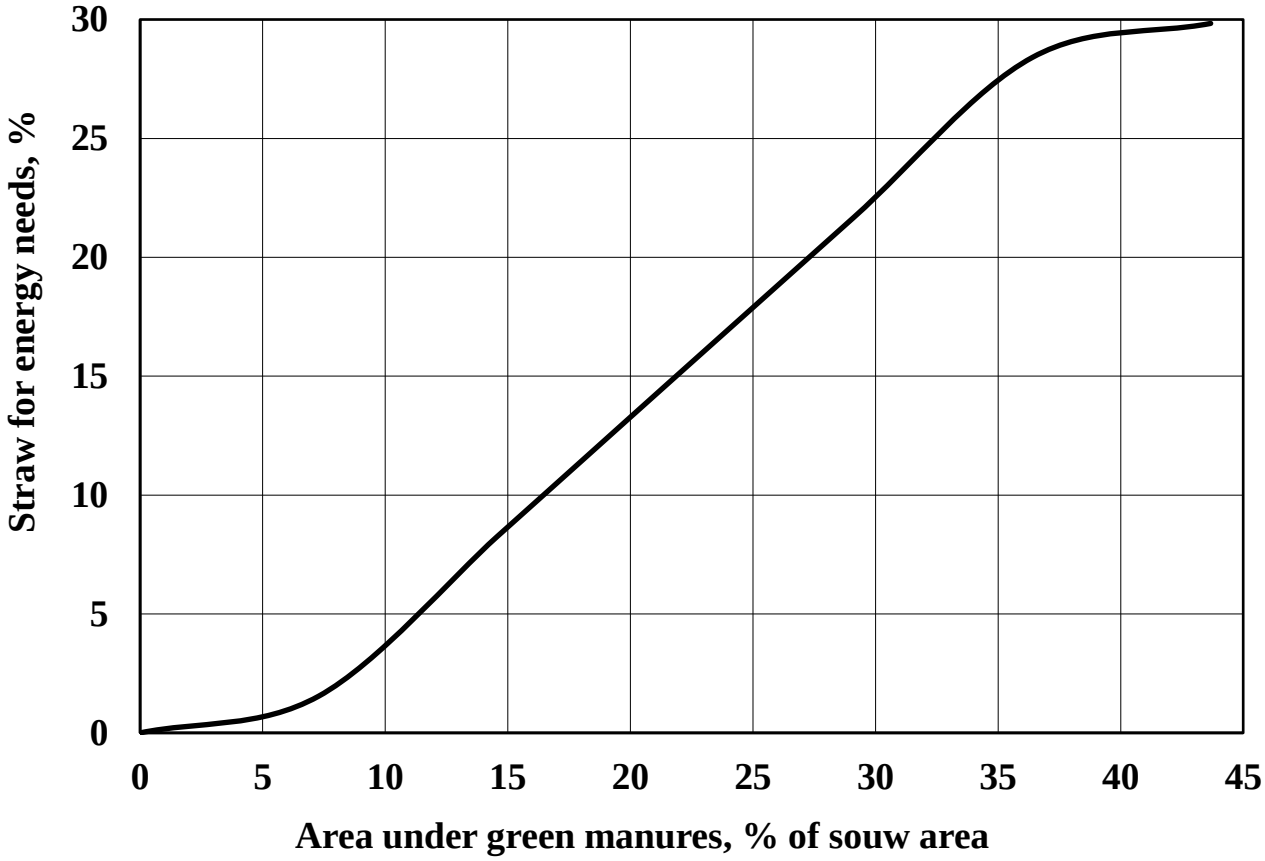


**Fig. 2.8. Relationship between relative volumes of straw for energy needs and the area under green manures in crop rotation**

Analysis of the possibilities of replacing diesel fuel of petroleum origin with diesel biofuels based on renewable resources of oilseeds showed that processing of rapeseed and soybean grain will not completely replace diesel fuel of petroleum origin, which is consumed in agricultural production (fig. 2.9). To do this, it is necessary to additionally attract 7.8% of the total production of sunflower grain. Glycerin precipitate (glycerol), which is formed in the production of diesel biofuels, is included in the total biomass balance for the biomethane production.

It is also established that due to the insignificant volume of gasoline consumption in agricultural production, only 1.4% of the total corn grain production is needed to replace it with bioethanol. The increase in the required volume of bioethanol production compared to the consumption of gasoline in agricultural production (fig. 2.10) is due to the fact that the calorific value of gasoline is 1.6 times greater than that of bioethanol. The required amount of gasoline for bioethanol denaturation, based on the relative demand of 3%, is 123 t.

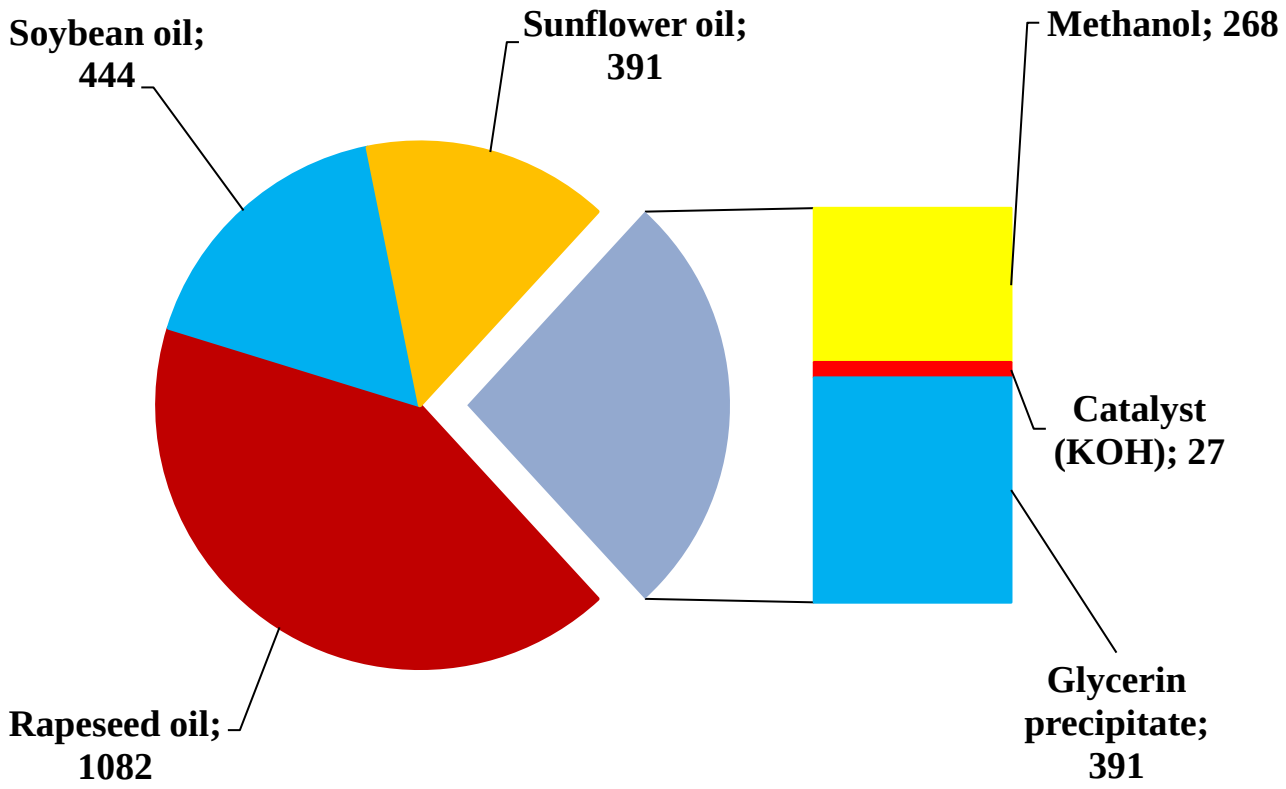


**Fig. 2.9. The potential structure of raw material flows in the production of diesel biofuels in thousands of tons**

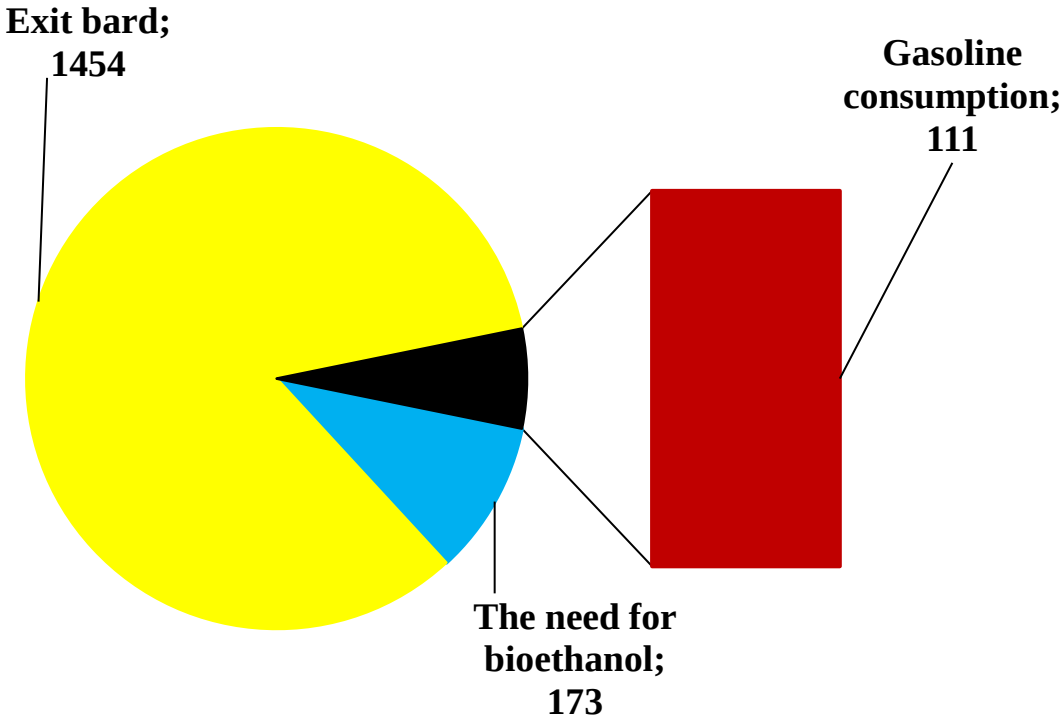


**Fig. 2.10. The potential structure of raw material flows in the production of bioethanol in thousands of tons**

Calculations have shown that the potential production of biomethane based on organic biomass of manure, droppings and glycerol can reach about 1 billion $m^3$, which is 4 times higher than the consumption of natural gas in agricultural production in

Ukraine.

The use of gasifiers to produce generator gas with the production of heat and electricity based on it in conjunction with biomethane cogeneration makes it possible to fully meet the heat needs of agricultural and food production and meet the needs of agricultural production in electricity.

According to the calculations, the total heat production during the transformation of generator gas and biomethane into electric energy amounted to 90 million GJ. On the other hand, heat consumption by agricultural and food production, according to Statistical Yearbook of Ukraine for 2019, was only 39 million GJ. Excess of low-temperature heat in the amount of 51 million GJ can be used for heating domestic and social infrastructure facilities, and also encourages the need to develop more efficient methods for converting generator gas and biomethane into electricity (fig. 2.11).

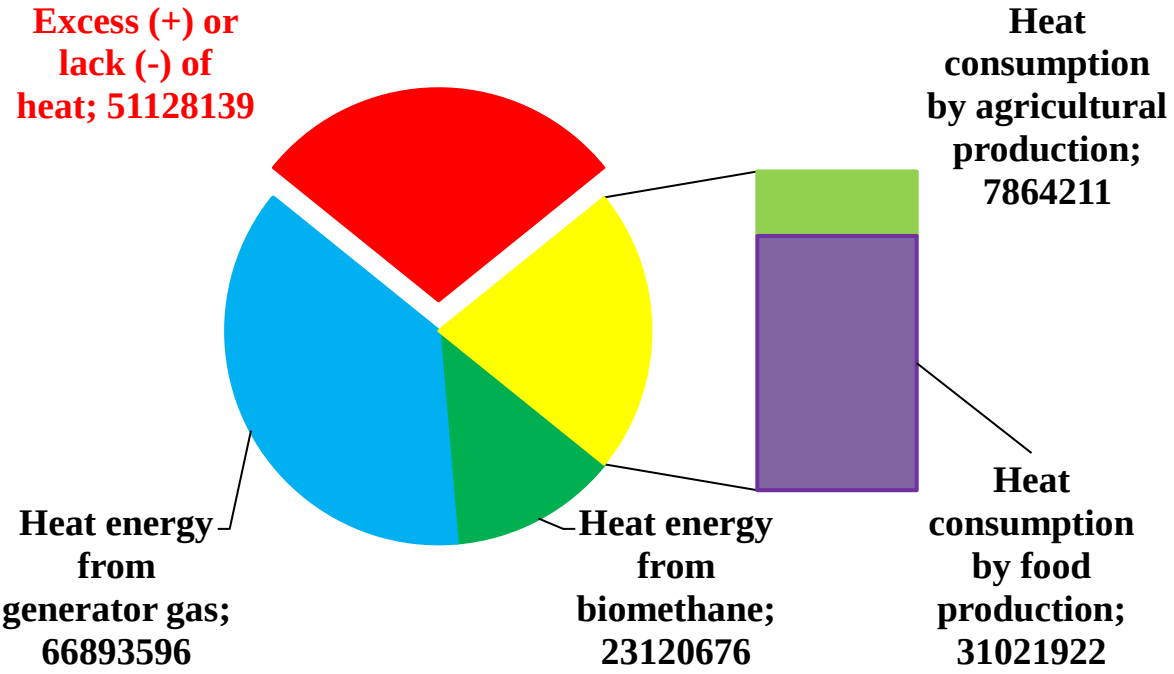


**Fig. 2.11. Potential production and consumption of heat based on biomethane and generator gas in Ukrainian agriculture in GJ**

As for generating electricity from generator gas and biomethane, it can be predicted that 5,464 million kWh of the produced electricity will be by 932 million kWh less than the total demand for agricultural production (2,405 million kWh) and food production (3,991 million kWh) according to Statistical Yearbook of Ukraine for 2019 (fig. 2.12), but by 3,059 million kWh more than the needs of agricultural production. The use of excess electricity does not create technical problems, unlike low-temperature excess thermal energy, because it can be transferred to the general electrical network.

Unlike the production of pellets and briquettes from plant biomass, which must be transported to consumers, the production of electric energy significantly simplifies the supply of electric energy to consumers through electric networks.

At the same time, there is also no need to create a number of intermediary structures for the sale of pellets and briquettes.

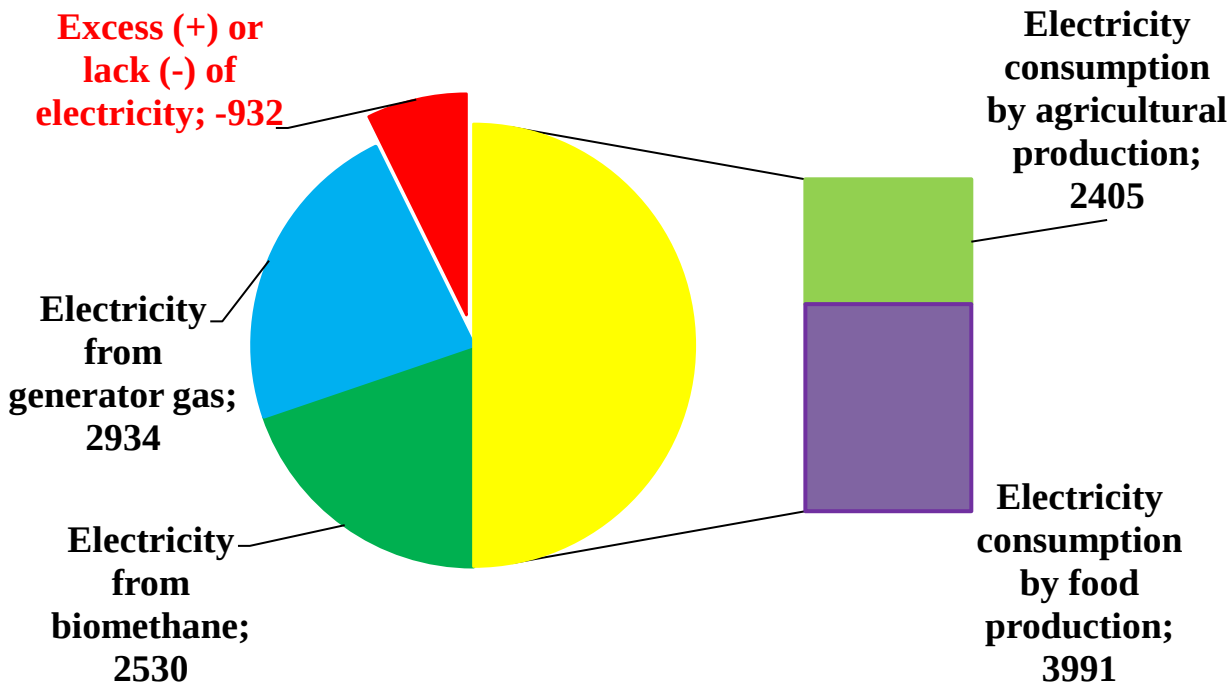


**Fig. 2.12. Potential production and consumption of electricity based on biomethane and generator gas in Ukrainian agriculture in million kWh**

Thus, Ukraine's agricultural production can fully ensure energy autonomy based on its own raw material base.

**Questions for self-assessment:**

1. What is the essence of the concept of diversified production of agricultural products and biofuels in agroecosystems?
2. What are the main tasks of agricultural production?
3. Why is it important to increase biological diversity in agroecosystems?
4. What blocks are included in the block diagram of an agroecosystem with biofuel production?
5. What are the areas of diversified production of agricultural products and biofuels in agroecosystems?
6. What limits the use of the energy potential of biomass in agricultural production?
7. What are the main mechanical and technological features of biofuel and energy production within the agroecosystem?
8. What are the main advantages and disadvantages of biogas production and use in agricultural production?
9. What are the main advantages of producing thermal energy from raw materials of agricultural origin?
10. What are the difficulties and advantages of producing liquid biofuels in agricultural production?
11. What do the limit values of raw materials for biofuel production depend on?
12. What is the contribution of biofuel production to the structure of income from agricultural production?

13. Describe the possibilities of energy production based on one hectare of crop rotation.

14. Describe the structure of straw use in crop rotation.

15. What is the relationship between the area under green manure and the relative amount of straw for energy needs?

16. Describe the potential production and consumption of heat and electricity in the agricultural production of Ukraine based on biofuels.

**References:**


1. Golub G. A., Chuba V. V., Lutak V. A., Yarosh Y. D., Kukharets S. M. Researching of indicators of agroecosystem without external energy supply. *Journal of Central European Agriculture*. 2021. Vol. 22, No. 2. P. 397–407.

2. Golub G. A., Chuba V. V., Tsyvenkova N. M., Marus O. A., Yarosh Y. D. Bioenergy potential of Ukrainian agriculture. *International Journal of Renewable Energy Research*. 2021. Vol. 11, No. 3. P. 1223–1229.

3. Golub G. A., Kukharets S. M. Choice of model for assessment of humus condition of soil environment of agroecosystems. *Bulletin of Sumy National Agrarian University. Series: Mechanization and Automation of Production Processes*. 2016. Iss. 3 (28). P. 190–194.

4. Golub G. A., Kukharets S. M., Yarosh Y. D., Kukharets V. V. Integrated use of bioenergy conversion technologies in agroecosystems. *INMATEH – Agricultural Engineering*. 2017. Vol. 51, No. 1. P. 93–100.

5. Golub G. A., Kukharets S. M., Yarosh Y. D., Zavadska O. A. Structural models of agroecosystems and calculation of their energy autonomy. *Engineering for Rural Development* : proceedings of the 18th International Scientific Conference, Jelgava, 22–24 May 2019. Jelgava, 2019. P. 1344–1350.

6. Golub G. A., Skydan O. V., Kukharets V. V., Yarosh Y. D., Kukharets S. M. The estimation of energetically self-sufficient agroecosystem's model. *Journal of Central European Agriculture*. 2020. Vol. 21, No. 1. P. 168–175.

7. Renewable energy in agriculture / G. A. Golub, O. V. Skydan, S. M. Kukharets, N. M. Tsyvenkova, O. A. Marus, Y. D. Yarosh, V. V. Chuba, M. Yu. Pavlenko ; ed. by G. A. Golub, O. V. Skydan. Kyiv ; Zhytomyr : NULES of Ukraine ; Polissia University, 2023. 400 p.

8. Kukharets S. M. Increasing the energy autonomy of agroecosystems. Mechanical and technological bases : monograph. Zhytomyr : ZhNAEU, 2016. 192 p.

9. Kukharets S. M., Golub G. A. Obtaining energy from raw materials of agricultural origin. *Scientific Bulletin of Tavria State Agrotechnological University*. 2016. Iss. 6, Vol. 1. P. 80–98.

10. Kukharets S. M., Golub G. A., Skydan O. V., Osypchuk O. Yu. Technical and technological proposals for obtaining energy from raw materials of agricultural origin. *Bulletin of Zhytomyr National Agroecological University*. 2015. No. 2 (50), Vol. 1. P. 369–385.

11. Weiser C., Zeller V., Reinicke F., Wagner B., Majer S., Vetter A., Thrän D. Integrated assessment of sustainable cereal straw potential and different straw-based energy applications in Germany. *Applied Energy*. 2014. Vol. 114. P. 749–762.

# 3. DIESEL BIOFUEL PRODUCTION

**Lecture Plan:**


**3.1. Technologies for the production of oil and diesel biofuels 44**
**3.2. Assessment of the raw material base of agro-industrial production of diesel biofuels with two-stage expression of seed oil 46**
**3.3. Production of oil for the production of diesel biofuels from algae 49**
**3.4. Technical support of diesel biofuel production 51**
**3.5. Theoretical foundations of diesel biofuel production 64**
**3.6. Economic efficiency of diesel biofuel production 67**


## 3.1. Technologies for the production of oil and diesel biofuels

Currently, there is a wide variety of technologies for the production of vegetable oil and diesel biofuels, but not all of them are widely used due to problems with the creation of equipment and their low efficiency. Conventionally, all technologies can be divided into two groups (fig. 3.1 and 3.2): industrial and agro-industrial (a shortened version of industrial technologies that are socially adapted to meet the needs of agricultural production in oil and diesel biofuels).

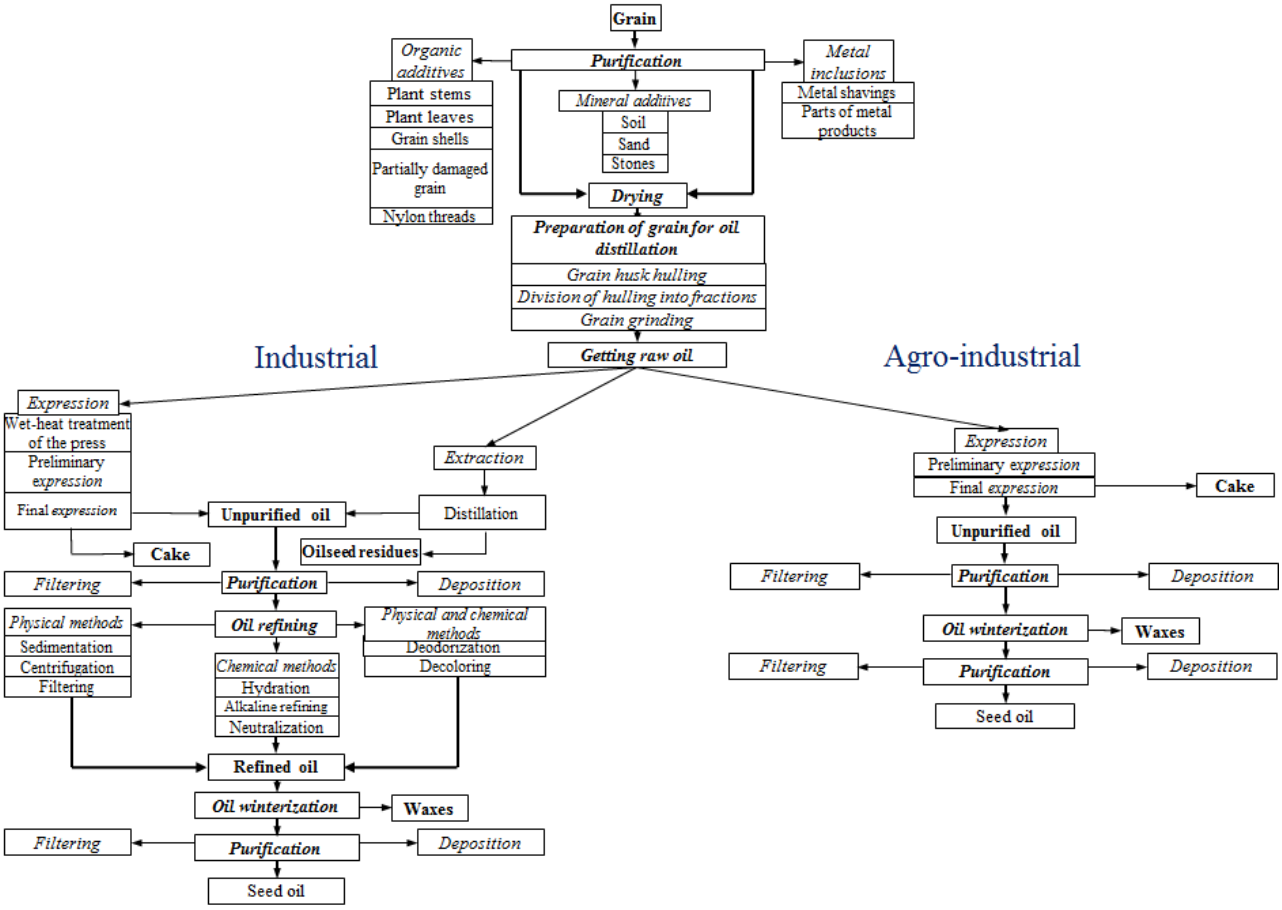


**Fig. 3.1. Seed oil production scheme**

The technology of seed oil production includes the following main stages: preparation of grain for oil production; production and purification of oil mass, and

production of diesel biofuels, in addition – esterification and purification of methyl ether (diesel biofuel).

Industrial technology for the production of seed oil is traditionally used in fat and oil plants that process oilseeds. It consists of the following stages: acceptance and purification of grain from additives, grain drying, production and purification of oil mass, refining; winterization and re-purification of oil.

Advantages of industrial technology for the production of seed oil and diesel biofuels: high quality of products produced, longer shelf life of oil and products produced from it, higher yield of crude oil mass due to the use of the extraction method.

The disadvantages of industrial technology include significant energy costs, complexity of equipment, and loss of useful nutrients during refining.

Advantages of agro-industrial technology for the production of vegetable oil and diesel biofuels: fewer production stages (there are no extraction operations and wet-heat treatment during the production of raw oil), simplicity and availability of equipment, the resulting oil has a natural taste, smell and color, the cost of production is lower due to lower electricity costs.

The disadvantages of agro-industrial technology are as follows: the resulting vegetable oil has a lower quality, contains free fatty acids, phospholipids, and has a shorter shelf life.

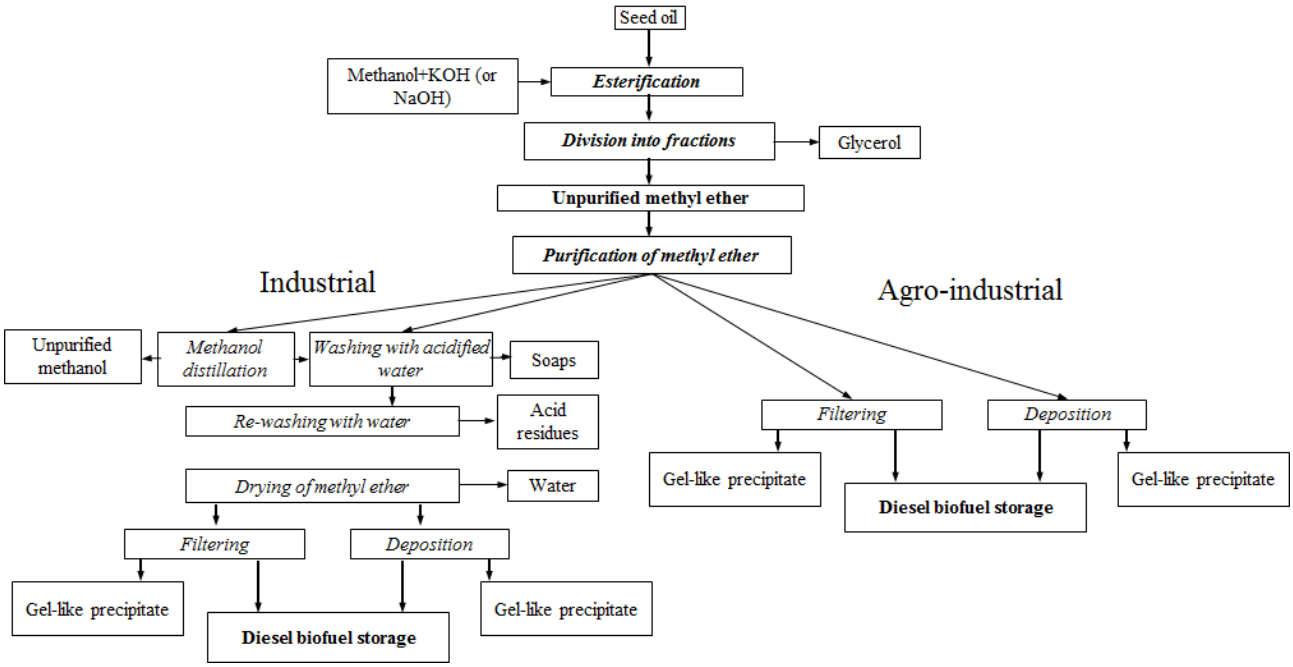


**Fig. 3.2. Diesel biofuel production scheme**

The main processes of industrial technology for the production of diesel biofuels: esterification; division into fractions (diesel biofuel – light fraction and glycerin sediment – heavy fraction), distillation of methyl alcohol; washing of diesel biofuels with acidified water and its dewatering.

**Esterification** is the process of interaction of a mixture of fatty acids (animal or plant origin) with alcohol (methyl, ethyl, etc.) using an alkaline catalyst (KOH, NaOH) to accelerate the reaction, which results in diesel biofuels and glycerol precipitate

(glycerol, alcohol residues, etc.).

The esterification reaction follows the following approximate expression:

$$C_{57}H_{98}O_6 + 3\ CH_3OH = C_{57}H_{102}O_6 + C_3H_8O_3$$

where $C_{57}H_{98}O_6$ – seed oil; $CH_3OH$ – methyl alcohol; $C_{57}H_{102}O_6$ – methyl ether (diesel biofuel); $C_3H_8O_3$ – glycerin precipitate.

Taking into account the molar mass of the input and output components, the yield of diesel biofuels from seed oil is approximately equal to the amount of seed oil. However, in practice, it is somewhat smaller and ranges from 85 to 95%.

The need to distill methyl alcohol is due to the fact that its presence in diesel biofuels leads to the destruction of rubber engine parts and damage to paint and varnish surfaces.

Washing with acidified water is necessary to remove the catalyst that leads to sediment. Repeated flushing of diesel biofuels with water is carried out to remove the acid that enters it during the first washing. Dewatering of diesel biofuels is necessary to remove moisture that enters it during washings, because the presence of water in the fuel leads to incomplete combustion, reduced engine power, corrosion and the formation of carbon deposits in the engine cylinders.

Industrial production technology is traditionally used in large and industrial enterprises, with an annual output of diesel biofuels from 20,000 to 100,000 t/year.

The advantages of industrial technology for the production of diesel biofuels include its high quality, which makes it possible to use diesel biofuels both in mixtures and without adding traditional diesel fuel. The main disadvantages of such production are the complexity of technological equipment, significant electricity costs, and high production costs.

Agro-industrial diesel biofuel production technology is widely used for the production of diesel biofuels with an annual volume of 100 to 5,000 t/year. It consists of esterification, division into fractions (diesel biofuel – light fraction and glycerol sediment or glycerol – heavy fraction, which is a byproduct in the production of diesel biofuel) and purification of diesel biofuel (distillation of methanol and purification from gel-like sediment by filtration or precipitation).

The advantages of agro-industrial technology in comparison with industrial technology include lower energy consumption, simplicity and availability of equipment, lower cost of products received.

### 3.2. Assessment of the raw material base of agro-industrial production of diesel biofuels with two-stage expression of seed oil

Agro-industrial technology for the production of diesel biofuels is a technologically simplified industrial technology that is adapted for farms with the production of diesel biofuels for their own use. At the same time, the issue of increasing the economic efficiency of diesel biofuel production from vegetable oils in such conditions remains unsolved.

The technology of production of diesel biofuel with two-stage expression of seed oil by pressing includes the first cold expression and the second hot expression (fig. 3.3).

Agro-industrial production of diesel biofuel includes the following operations: cleaning grain from impurities, drying to a given norm of moisture content, expression, during which raw oil of the first (cold) pressing is obtained and cake with a high oil content is subjected to repeated (hot) pressing.

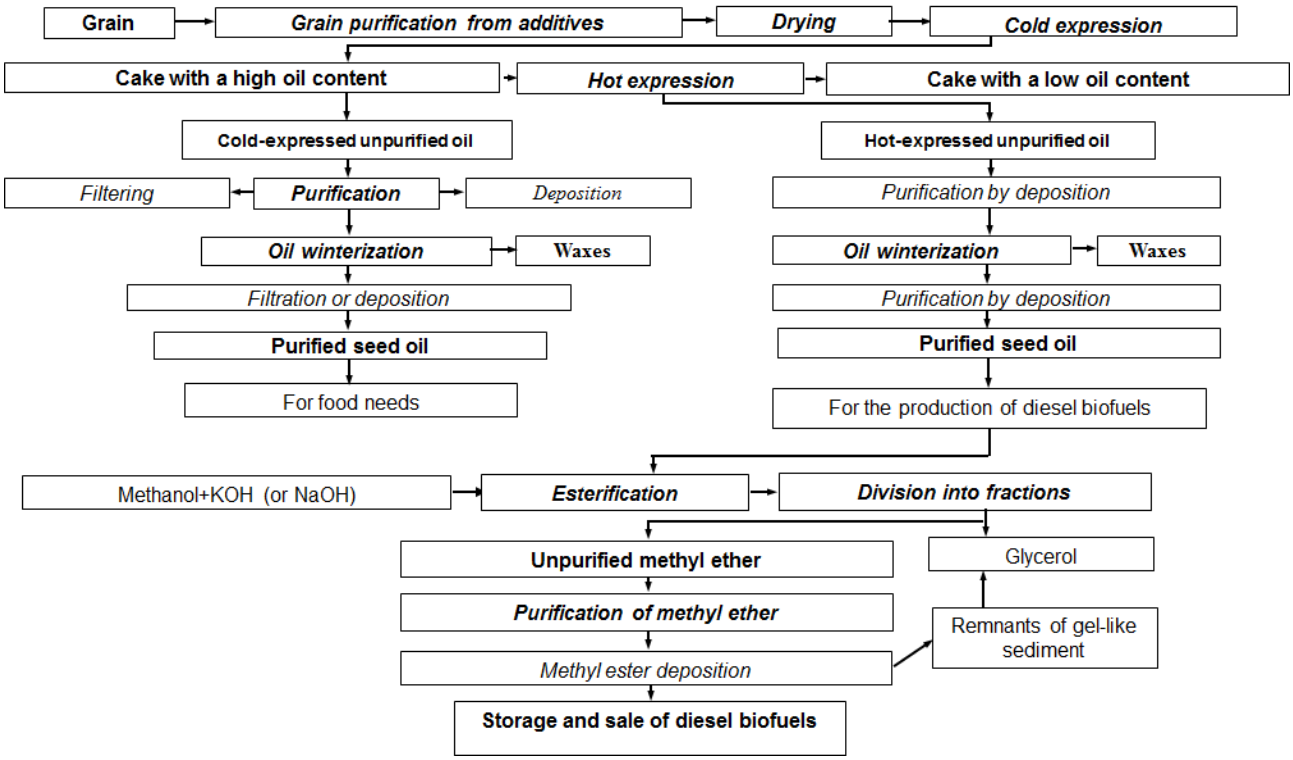


**Fig. 3.3. Scheme of agro-industrial production of cold-expressed oil and diesel biofuels from hot-expressed oil**

Cold-pressed oil is purified by filtration or precipitation, subjected to winterization, re-filtered or precipitated, and used for food purposes. Hot-expressed oil is purified by precipitation, subjected to winterization to remove waxes, re-purified by precipitation and used as raw materials for the production of diesel biofuels, namely: with the addition of potassium methylate, the esterification process is carried out, divided into fractions, the resulting methyl ether is purified by precipitation and pumped into a diesel biofuel storage tank.

When expressing we have the equation of the oil mass balance:

$$M_O = M_{OC} + M_{OH}, \quad (3.1)$$

where $M_O$ – total mass of oil that can be obtained by pressing oilseed grain, kg; $M_{OC}$ – weight of first (cold) expressed oil, kg; $M_{OH}$ – weight of second (hot) expressed oil, kg.

Multiplying the oil mass balance equation by the price of each component, we get:

$$M_O C_O = M_{OC} C_{OC} + M_{OH} C_{OH}, \quad (3.2)$$

where $C_O$ – oil price, UAH/l; $C_{OC}$ – price of first (cold) expressed oil, UAH/l; $C_{OH}$ – price of second (hot) expressed oil, UAH/l.

Dividing by the mass of the oilseed grain, we get:

$$\frac{M_O}{M} C_O = \frac{M_{OC}}{M} C_{OC} + \frac{M_{OH}}{M} C_{OH}, \text{ or } k_O C_O = k_{OC} C_{OC} + k_{OH} C_{OH}, \quad (3.3)$$

where $M$ – grain weight of the oilseed crop, kg; $k_O$– total oil yield factor, %; $k_{OC}$ – coefficient of yield of first (cold) expressed oil, %; $k_{OH}$ – second (hot) expressed oil yield factor, %.

Based on the oil mass balance equation and taking into account that$k_{OH} = k_O - k_{OC}$, it can be written:

$$k_O C_O - k_{OC} C_{OC} = (k_O - k_{OC}) C_{OH}, \quad (3.4)$$

From where the maximum price of second (hot) expressed oil, at which cash profits from the sale of oil will not decrease, will be:

$$C_{OH} = \frac{k_O C_O - k_{OC} C_{OC}}{k_O - k_{OC}}. \quad (3.5)$$

The analysis shows that the marginal price of second (hot) expressed oil decreases with increasing price of first (cold) expressed oil and with increasing coefficient of yield of cold-expressed oil. In principle, it is possible to obtain zero values of the marginal price of second (hot) expressed oil at a high price of cold-expressed oil and at higher yield coefficients of first (cold) expressed oil 20% (fig. 3.4).

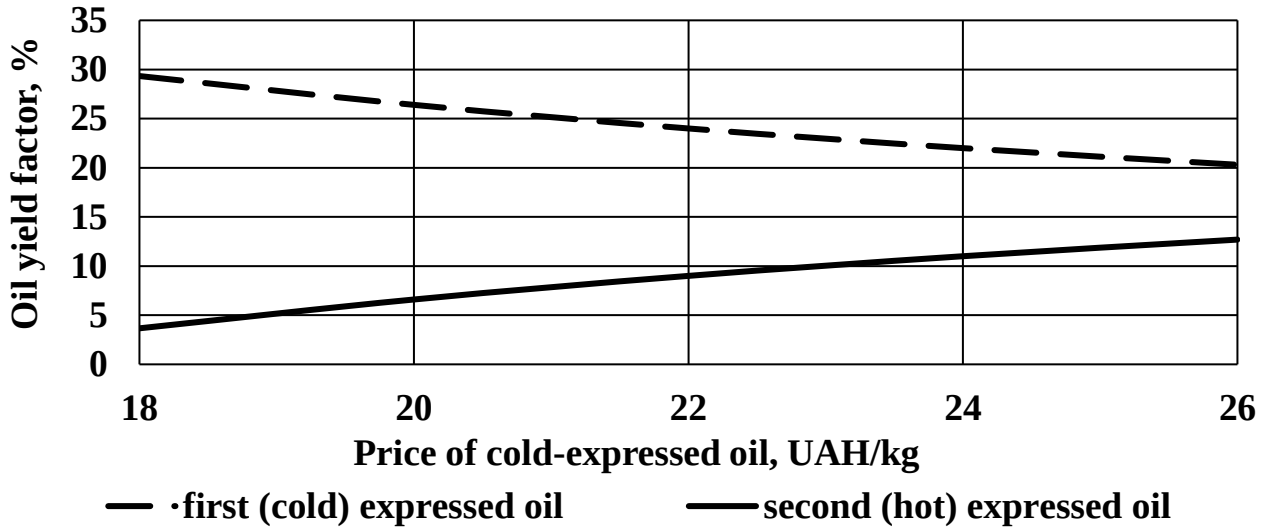


**Fig. 3.4. Dependence of the yield coefficients of first (cold) and second (hot) expressed oil on the price of first (cold) expressed oil at zero value of the price of second (hot) expressed oil**

It is established that with an increase in the price of first (cold) expressed oil, the zero limit price of second (hot) expressed oil can be achieved at lower values of the yield coefficient of first (cold) expressed oil and at higher values of the yield coefficient of second (hot) expressed oil. So, for example, if the price of first (cold) expressed oil is 18 UAH/kg, the maximum price of second (hot) expressed oil will have a zero value if the yield coefficient of first (cold) expressed oil is 29% and the yield coefficient of second (hot) expressed oil is 4%. At the price of first (cold) expressed oil of 26 UAH/kg, a similar situation will occur with a yield coefficient of first (cold) expressed oil of 20% and a yield coefficient of second (hot) expressed oil of 13%.

In the case when the yield coefficients of the first (cold) and second (hot) expressed oil are the same and are $k_{OC} = k_{OH} = \frac{k_O}{2}$, the price of second (hot) expressed

oil, depending on the price of first (cold) expressed oil, will be:

$$C_{OH} = 2C_O - C_{OC}. \quad (3.6)$$

Thus, to obtain seed oil, it is necessary to use two – stage pressing, and it is advisable to use high-quality first (cold) expressed oil for food needs, and inexpensive, compared to first (cold) expressed oil, second (hot) expressed oil-for the needs of diesel biofuel production.

### 3.3. Production of oil for the production of diesel biofuels from algae

Recently, it has become widespread the production of oil for the production of diesel biofuels from algae, which accumulate fats during photosynthesis to a level of 2 to 37% by weight of dried algae and have a higher rate of biomass accumulation when compared to plants.

Systems for the production of algae biomass are quite complex, but despite this, such systems existed earlier in agricultural production for the production of algae-based feed (fig. 3.5).

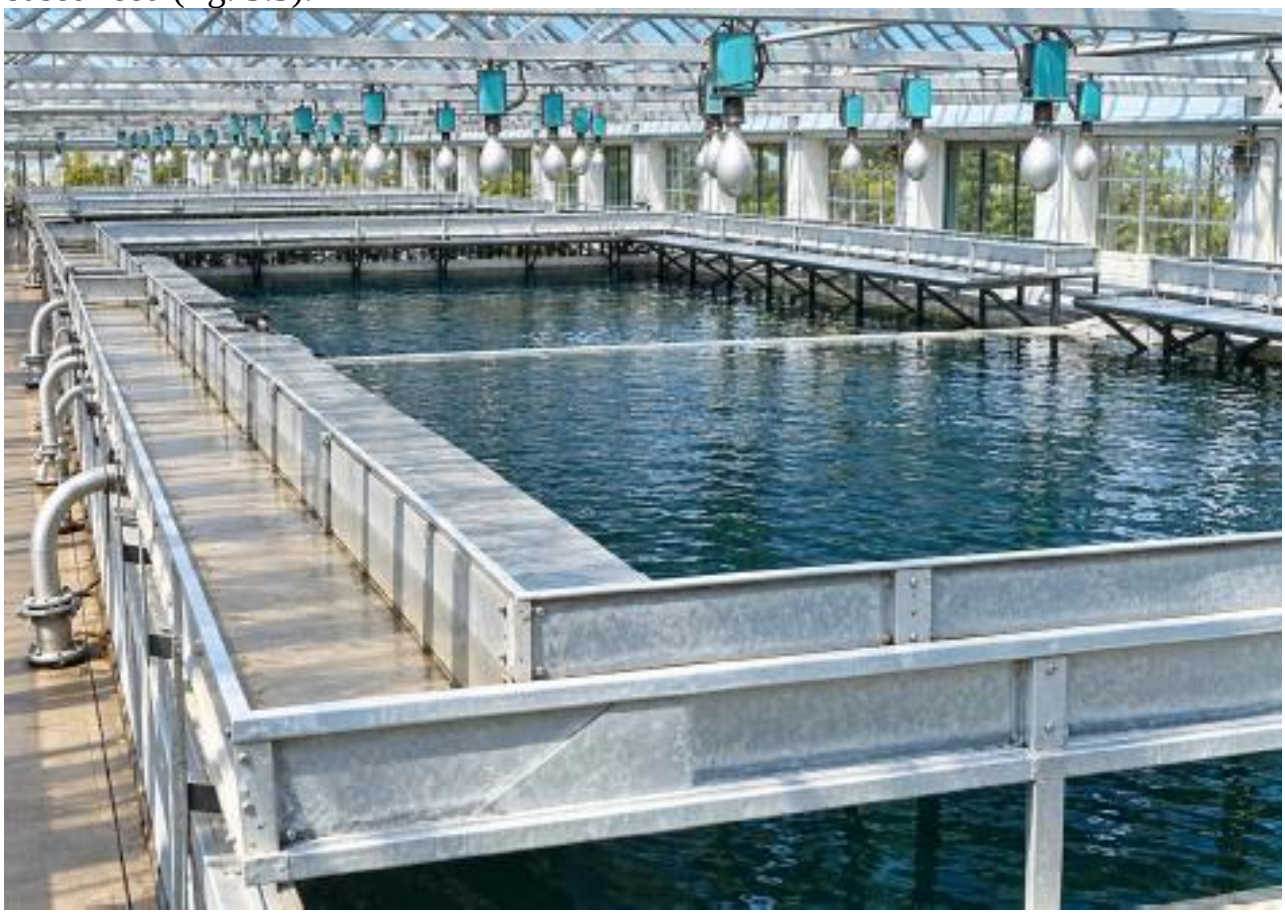

**Fig. 3.5. Algae production plant for pig feeding on a farm named after Dzerzhinskiy, in Pokrovskyi District, Dnipropetrovsk Region**

Currently, installations for the production of oilseeds have become much more compact due to the use of tubular photobioreactors, the scheme and general view of which is shown in fig. 3.6 and 3.7, as well as the use of other types of reactors.

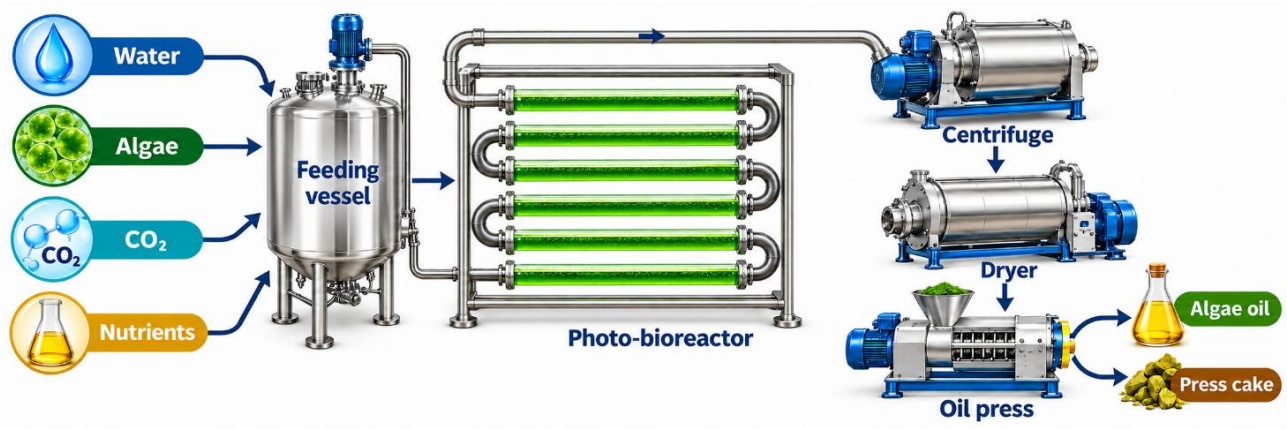


**Fig. 3.6. Diagram of an algae production plant with a tubular photobioreactor**

Regardless of the design of the photobioreactor for algae production, the technological process of oil production involves the preparation of a water-based nutrient solution, to which nutrients and carbon dioxide are added to ensure the photosynthesis process. The nutrient solution is inoculated with the appropriate type of algae.

After passing the appropriate time for growing algae, water is separated from them by means of a centrifuge, after which they are dried, and then, using a press or by extraction from the dry mass of algae, oil, which is used for the production of diesel biofuels, is separated.



**Fig. 3.7. General view of an algae production plant with a tubular photobioreactor [source: Płaczek M., Patyna A. and Witczak S. Technical evaluation of photobioreactors for microalgae cultivation. E3S Web of Conferences 19, 02032 (2017) DOI:10.1051/e3sconf/20171902032 EEMS 2017, pp. 1-10] and general view of algae-derived oil**

Such plants require scientific justification to optimize their parameters and technical and economic assessment of the efficiency of diesel biofuel production and are becoming increasingly widespread in the world.

### 3.4. Technical support of diesel biofuel production

Recently, the development of equipment for the production of diesel biofuels was carried out by scientists of the National Research Center "Institute of Mechanization and Electrification of Agriculture", the National University of Life and Environmental Sciences of Ukraine, Bila Tserkva National Agrarian University, Odesa State Agrarian University and others, which tried to improve the equipment using various mixing methods in the esterification process, because the better the mixing, the better the diesel biofuel produced will be. In the esterification process, the following types of mixing are used: mechanical mixing, hydrodynamic and hydro mechanical mixing.

For the agro-industrial production of diesel biofuels in the National Research Center "Institute of Mechanization and Electrification of Agriculture" of the National Academy of Agrarian Sciences, it was designed a periodic unit UVME-1000 (fig. 3.8) with a capacity of 1,000 l/h., in which mixing takes place using a frame agitator. The disadvantage of this unit is that a separate tank with a pump is used for each technological operation.




**Fig. 3.8. Plant for producing diesel biofuels from vegetable oils UVME-100, with a capacity of 1,000 t/year**

In addition to the UVME-1,000 periodic action unit, the unit of continuous action

UB-TP20, with the capacity from 5 to 20 l/h, was developed (fig. 3.9), in which mixing occurs by passing seed oil and an alkaline catalyst through a tubular esterifier. However, this unit is intended for use in the industrial production of diesel biofuels.



**Fig. 3.9. Equipment for the production of diesel biofuels UB-TR20 with a capacity of 5 l/h.**

At the same time, an experimental plant for the production of diesel biofuels with a capacity of 100 l/h was developed at the National University of Life and Environmental Sciences of Ukraine under the leadership of Professor V.A. Dubrovin (fig. 3.10), on the basis of which an industrial plant with a capacity of 300 t/year was implemented (fig. 3.11). In these installations, mixing is carried out using a mechanical blade mixer.

The disadvantage of this equipment, as in the previous versions, is the use of a separate container with auxiliary equipment for each stage of diesel biofuel production, in addition, mixing takes place using a blade mixer, which worsens the esterification process compared to a frame mixer.

In Ukraine, there are enterprises that produce equipment for the production of diesel biofuels or sell imported equipment of various capacities with and without automation, as well as use structural materials of different quality, which affects the cost of equipment.



**Fig. 3.10. Equipment for the production of diesel biofuels with a capacity of 100 l/h**



**Fig. 3.11. Equipment for the production of diesel biofuels with a capacity of 300 t/year**

A known method for the production of fatty acid methyl ether and equipment for its implementation (fig. 3.12), where methyl alcohol is supplied to the mixing container 4 from the container 3, and a catalyst is supplied from the container 2. In the container 4, methyl alcohol is mixed with the catalyst using a mechanical mixer 5. The fat that is in the container 1 and the mixture of potassium methylate from the container 4 with the help of the pump 6 enter the reaction zone 7, where the esterification process takes place in the mixing device 8. The resulting emulsion enters the distiller 9, where it undergoes evaporation, as a result of which methyl alcohol is released through the methyl alcohol diverter 10, and the resulting methyl ether - through the corresponding zones of the distiller 11. Non-esterified substances are separated and collected in the phase separation device 12. If necessary, some of the non-esterified substances are returned through the pipeline by pump 13 to the fat content area 1.

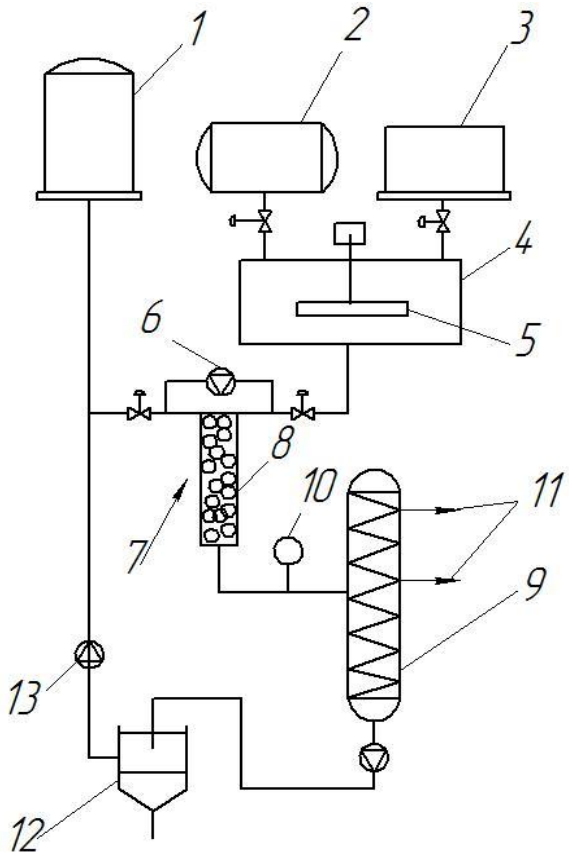


**1 – fat container; 2 – catalyst container; 3 – methyl alcohol container; 4 – mixing container; 5 – mechanical mixer; 6 – high pressure pump; 7 – reaction zone; 8 – mixing device; 9 – distiller; 10 – methyl alcohol diverter; 11 – diesel biofuel diversion zones; 12 – separation device; 13 – pump for pumping out non-esterified substances**

**Fig. 3.12. Diagram of equipment for the production of diesel biofuels using a static mixing device (Ukrainian patent for invention 44931)**

The advantages of this equipment are the use of highly efficient turbulence for the esterification process. The disadvantage is that this equipment is difficult to use and has a low yield of diesel biofuel, because during evaporation, losses of diesel biofuel will occur.

There is a well-known hydrodynamic plant for producing diesel biofuels (fig. 3.13), in which the electric motor 1 drives the hydraulic pump 2, which in turn sucks oil from the tank 13 into the main line (a) through an open tap 3. In this case, the tap 4 must be open, and the taps 5, 8, 10 must be closed. After that, the tap 10 is opened and diesel fuel is conveyed through it from the tank 9 to the mixer-ejector 11. With the help of the tap 4, the working pressure in the discharge line 12 is regulated, which is controlled by a pressure gauge 7.

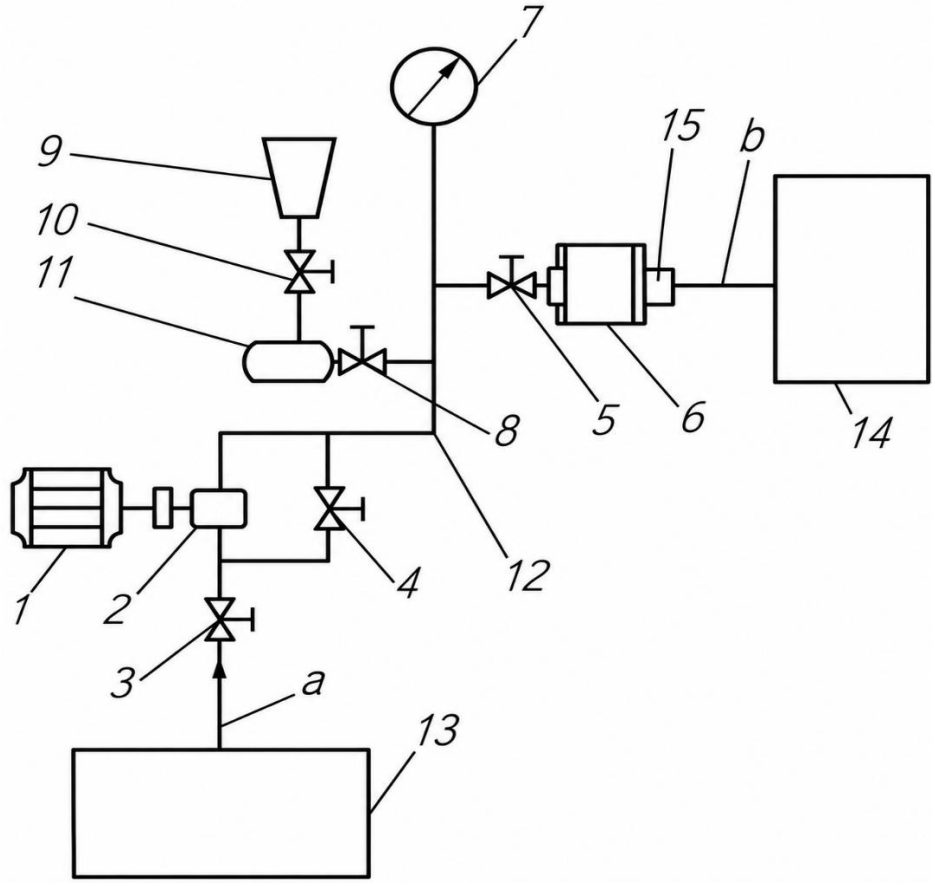


**Fig. 3.13. Hydrodynamic installation for the production of diesel biofuels according to the patent of Ukraine for utility model 31463 (designations are in the text)**

Diesel fuel under pressure passes through the discharge line 12 and enters the cavitator 6, where there is an intense saturation of diesel fuel with rapeseed oil. From the output 15 of the cavitator, the hydrodynamic mixture is conveyed through the main line (b) to the process tank 14. After saturation of diesel fuel with rapeseed oil, the taps 8, 10 are closed, and the installation is turned off.

The advantages of the equipment are the simplicity of the design and, accordingly, its accessibility. The disadvantages of this unit are that it is designed for hydrodynamic mixing of rapeseed oil with diesel fuel, and it is not designed for working on a mixture of rapeseed oil with potassium methylate.

It is proposed an improved modular plant for the production of diesel biofuels (fig. 3.14), which works as follows: there must be oil in the tank 1, methanol in the closed tank 2, and an alkaline catalyst in the measuring hopper 3.

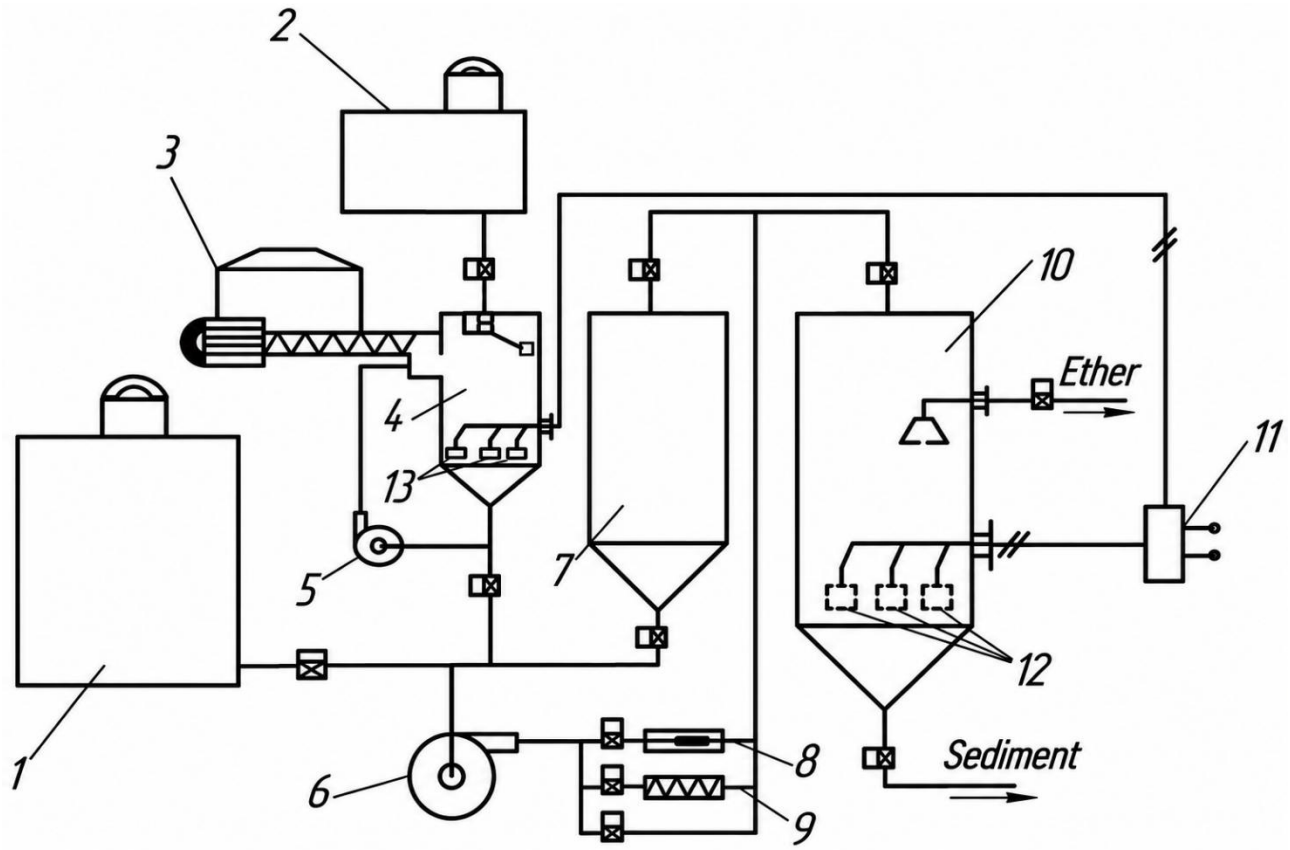


**1 – oil container; 2 – methyl alcohol container; 3 – catalyst dispenser; 4 – methyl alcohol and catalyst mixing reactor; 5 – optional circulation pump; 6 – main circulation pump; 7 – reactor; 8 – cavitation chamber; 9 – heat exchanger; 10 – sump tank; 11 – ultrasound generator; 12 – ultrasonic sump emitters; 13 – ultrasonic reactor emitters**

**Fig. 3.14. Modular installation for the production of diesel biofuels (Ukrainian utility model patent 36284)**

Container 4 is filled with the required volume of methanol. At the same time, the mixing pump 5, the alkaline catalyst dispenser 3 and ultrasonic emitters 13 are switched on. Methanol circulation and activation ultrasonic treatment of the reagent solution continue after the supply of the alkaline catalyst by the dispenser 3 is stopped for another set period. Then, the circulation pump 6 is switched on, which fills the reactor 7 with a mixture of methyl alcohol and seed oil to a given volume. After that, the circulation continues through the cavitation chamber 8, and if necessary through the heat exchanger 9, after which the entire volume is pumped into the sump 10, where ultrasonic emitters 12 are turned on to form sediment.

The advantages of this unit are the possibility of using it in agro-industrial production, the presence of ultrasonic emitters in the sump, mixing reactor of methyl alcohol and alkaline catalyst ensures rapid sediment formation, the installation of an additional circulation pump allows mixing chemical reagents efficiently.

The disadvantage of this unit is the high cost due to additional tanks, ultrasonic emitters and an additional circulation pump, which makes it difficult to compete in the market with simpler equipment designed for use in agro-industrial production.

It is also designed a modular plant for the production of diesel biofuels

(fig. 3.15), which operates as follows: when the drive motor 2 is turned on, a hydraulic pump 3 is driven, which sucks rapeseed oil from the tank 1.

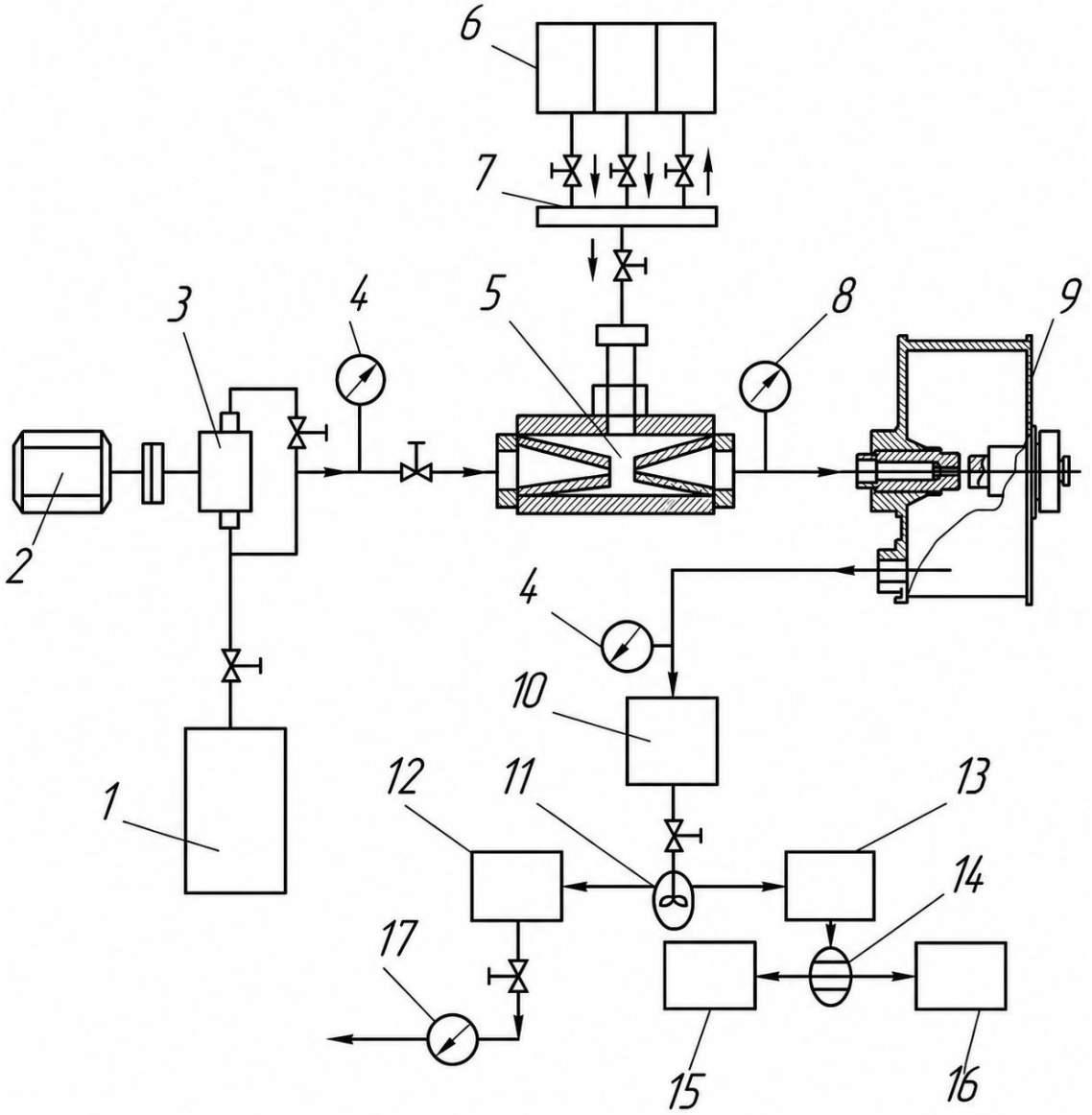


**1 – process tank (for rapeseed oil); 2 – electric motor; 3 – hydraulic pump; 4 – pressure gauge; 5 – dispenser mixer; 6 – tank; 7 – collector; 8 – temperature sensor; 9 – hydrodynamic dispersant; 10 – container; 11 – separator; 12 – diesel biofuel tank; 13 – container for water-glycerin mixture; 14 – filter cleaner; 15 – glycerin container; 16 – moisture tank; 17 – diesel biofuel flow meter**

**Fig. 3.15. Modular installation for the production of diesel biofuels (Ukrainian utility model patent 37619)**

The working pressure is regulated in the main line by a pressure gauge 4. Rapeseed oil under pressure passes through the pressure line and enters the dispenser mixer 5. At the same time, when the taps are open, diesel fuel, methyl alcohol and catalyst enter the collector 7, where they are previously mixed and sucked into the vacuum cavity of the dispenser 5. The pre-saturated mixture enters the hydrodynamic cavitator 9, where the mixture of components with rapeseed oil is deeply dispersed at the molecular level. The resulting mixture is piped to the process tank 10, and then to

the separator 11, where it is divided into fractions of diesel biofuel and water-glycerin mixture, then each fraction enters tanks 12 and 13. Glycerin is drained into a container 15, and water into a container 16. Diesel biofuel from the tank 12 is piped through the flow meter 17 for further use.

The advantages of this unit are high-quality mixing due to a hydrodynamic dispersant and the possibility of using it in seasonal work. The disadvantages are the complexity of the design, high production costs and its overall size.

It is also proposed to use equipment for the production of diesel biofuels, which works as follows: methyl alcohol is conveyed to the mixing tank 3 from container 1, and a catalyst is conveyed from container 2 to the grid 4 (fig. 3.16).

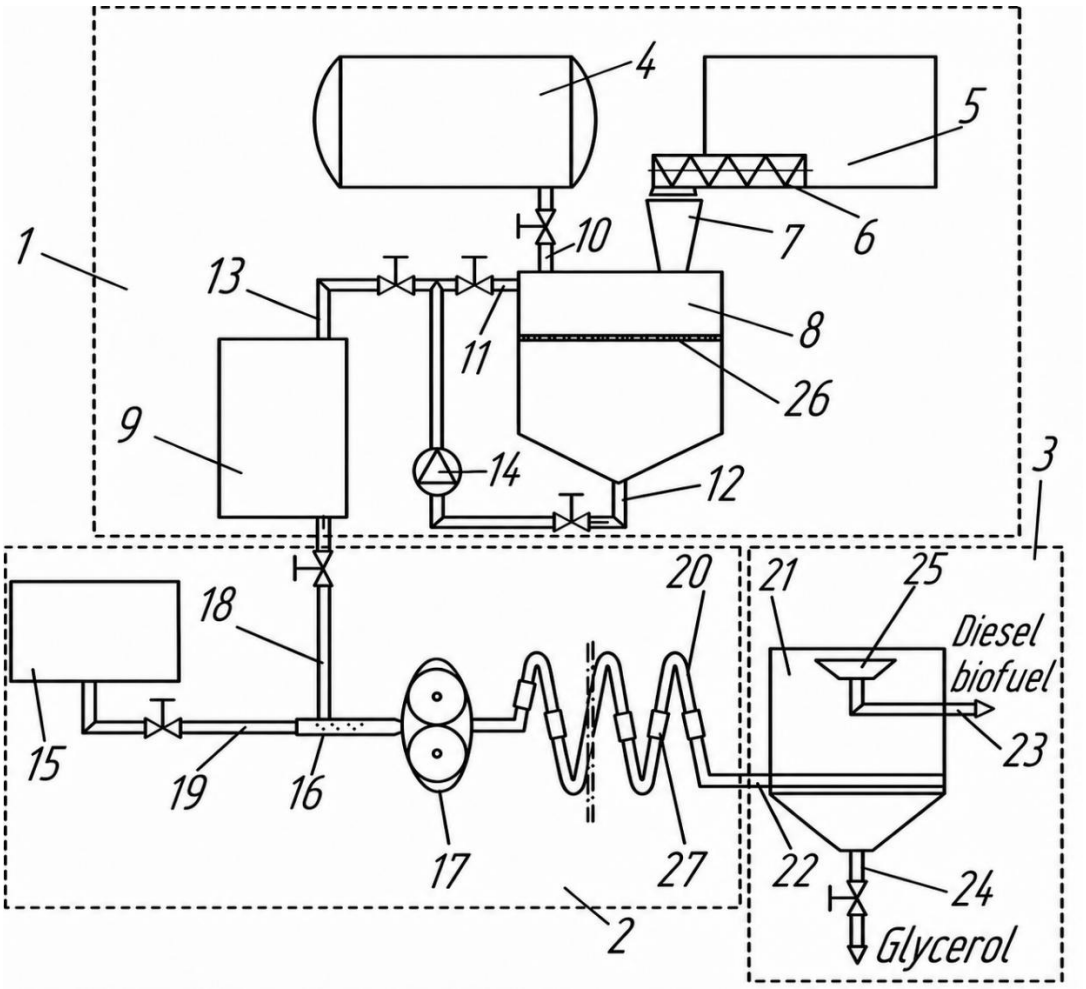


**1 – methyl alcohol container; 2 – catalyst container; 3 – tank for mixing methyl alcohol and catalyst; 4 – catalyst mesh; 5 – potassium methylate pump; 6 – storage container for potassium methylate; 7 – fat tank; 8 – pump for pumping fat and potassium methylate; 9 – tubular coil; 10 – turbolizer insert; 11 – gravity separator; 12 – funnel**

**Fig. 3.16. Equipment for the production of diesel biofuels (Ukrainian patent for invention 89320)**

In the tank 3, methyl alcohol is mixed with the catalyst by means of the pump 5. After mixing is completed, the formed potassium methylate enters the potassium methylate storage tank 6 with the help of the pump 5, from which it is then conveyed

by gravity to the pump 8. Seed fat is also conveyed by gravity from the container 7 to the pump 8. A mixture of potassium methylate with fat is pumped by the pump 8 to a tubular coil 9 for fat esterification, where it is mixed using turbolizer inserts 10. After passing the esterification of fat, the resulting emulsion enters the gravity separator 11, in which it is separated into diesel biofuels and glycerol sediment. Diesel biofuels are discharged from the gravity separator 11 through the funnel 12.

The advantage of this equipment is that it reduces the specific energy consumption of diesel biofuel production by intensifying the mixing process during fat esterification. It also has a low material consumption due to the use of hydro-mixing of methyl alcohol with a catalyst.

The disadvantages are that the heat that is released when the catalyst is dissolved with methyl alcohol to heat the fat before the production of diesel biofuels, the tubular coil has a high hydraulic resistance, which increases the energy consumption of the fat esterification process and is difficult to manufacture and install, in addition, the equipment does not provide proper quality indicators of diesel biofuels for a short time of settling in the stream.

The equipment described above has been improved by replacing tubular turbulators with cylindrical-conical expansion joints (fig. 3.17).

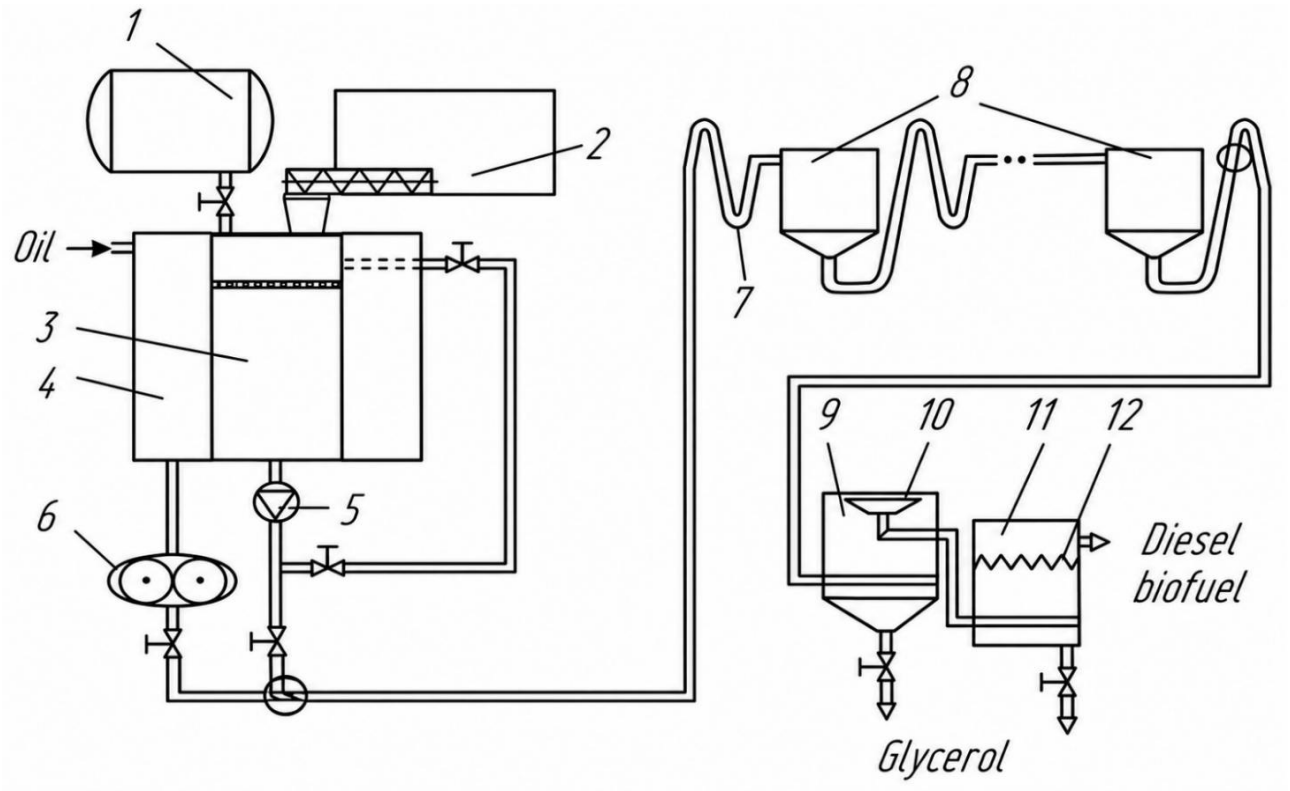


**1 – methyl alcohol container; 2 – catalyst container; 3 – fat tank; 4 – tank for mixing methyl alcohol and catalyst; 5 – potassium methylate pump; 6 – pump for pumping out fat and performing mixing in a hydraulic mixer; 7 – tubular coil; 8 – cylindrical-conical expansion joints; 9 – gravity separator; 10 – funnel; 11 – additional gravity separator; 12 – filter element**

**Fig. 3.17. Equipment for the production of diesel biofuels (Ukrainian patent for invention 94346)**

The advantages of this equipment are that high-quality mixing occurs due to the passage of fat and potassium methylate through a tubular coil with cylindrical-conical expansion joints.

The disadvantages are that this equipment must be used with a constant supply of raw materials to the reactor, which is ensured when producing large volumes of diesel biofuel. Periodic use of such equipment leads to complex and expensive technical equipment and maintenance.

It is well-known equipment for the production of diesel biofuels, which works as follows: to container 4, from container 1 of methyl alcohol, methyl alcohol is supplied (fig. 3.18). The catalyst from container 2 is conveyed into container 4 for dissolution. Pump 5 ensures complete dissolution of the catalyst in methyl alcohol. The pump 6 feeds fat from the container 3 and at the same time the pump 5 from the container 4 feeds a solution of potassium methylate to the hydraulic mixer 7. During pumping of the emulsion, the pump 6 feeds the mixture to the hydraulic mixer 8, which rotates due to the hydro-reactive force of the flows coming out of the nozzles 10 mixed on the rods 9 of the hydraulic mixer 8.

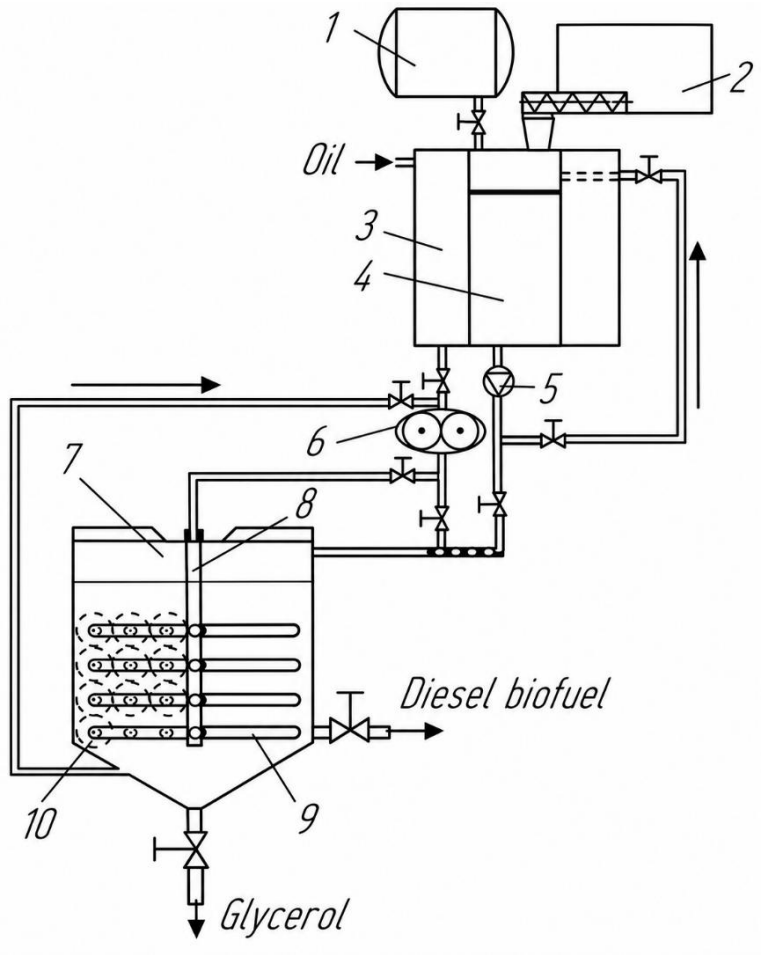




**1 – container with methyl alcohol; 2 – catalyst container; 3 – fat tank; 4 – tank for mixing methyl alcohol and catalyst; 5 – potassium methylate pump; 6 – pump for pumping out fat and performing mixing in a hydraulic mixer; 7 – hydraulic mixer; 8 – hydraulic mixer; 9 – hydraulic mixer rods; 10 – injectors**
**Fig. 3.18. Equipment for the production of diesel biofuels (Ukrainian patent for invention 100569)**

After undergoing fat esterification, the resulting emulsion remains in hydraulic mixer 7 until it is completely separated into diesel biofuel (DBF) and glycerol precipitate (GP).

The advantages of this equipment are its low overall size, affordable cost of equipment due to the use of hydro-mixing, and the possibility of using it in seasonal work.

The disadvantages are that the mixing of emulsions occurs in layers and a sufficient level of mixing of its layers is not provided.

The Industrial Institute of Crop Growing Mechanization (IICGM, Poland) has developed equipment for the production of diesel biofuels W500M (fig. 3.19) with a capacity of 500 liters per 1 cycle, in which mixing is used without the need to maintain the temperature regime. This equipment is designed for use in seasonal work and, if necessary, can be transported on a trailer (fig. 3.20) for use in farms.



**Fig. 3.19. Esterifier for the production of diesel biofuels in farm conditions (Poland)**



**Fig. 3.20. Mobile equipment for the production of diesel biofuels W500M**

A number of installations for the production of diesel biofuels were tested at the Ukrainian Research Institute of forecasting and testing of equipment and technologies for agricultural production named after L. Pogorelyi. One of them is a plant developed by us for the production of diesel biofuels directly in farms (fig. 3.21, fig. 3.22).

In this unit, a circular emulsion flow is created using a turbulization device, and the emulsion turbulization device itself is installed at the top of the gravity separator.

The developed equipment for the production of diesel biofuels works as follows: methyl alcohol is supplied to container 5 for dissolving the catalyst from container 1 of methyl alcohol. The catalyst from the container 2, using dispenser 4, is conveyed into the container 5 to dissolve the catalyst. Pump 6 for circulation and supply of the catalyst solution in methyl alcohol ensures complete dissolution of the catalyst in methyl alcohol. The pump 7 for circulation and supply of the emulsion conveys fat from the container 3 and at the same time the catalyst solution in methyl alcohol through the nozzle 14 to the gravity separator 9. During mixing of the emulsion, the pump 7 through the nozzle 11 takes the emulsion from the lower part of the gravity separator 9 and brings it to the nozzle 14. The retention of the circular flow of the emulsion in the upper part of the gravity separator 9 is ensured by the fact that the gap formed by the combined bases of the cones of the emulsion turbulation device and the

nozzle 14 for the emulsion supply and removal of diesel biofuels are attached to the float device 15. After complete fat esterification, the resulting emulsion remains in the gravity separator 9 until it is completely separated into fractions of diesel biofuels and glycerol sediment. Diesel biofuel is pumped out using the pump 8 through the slot of the emulsion turbulation device and the nozzle 14.

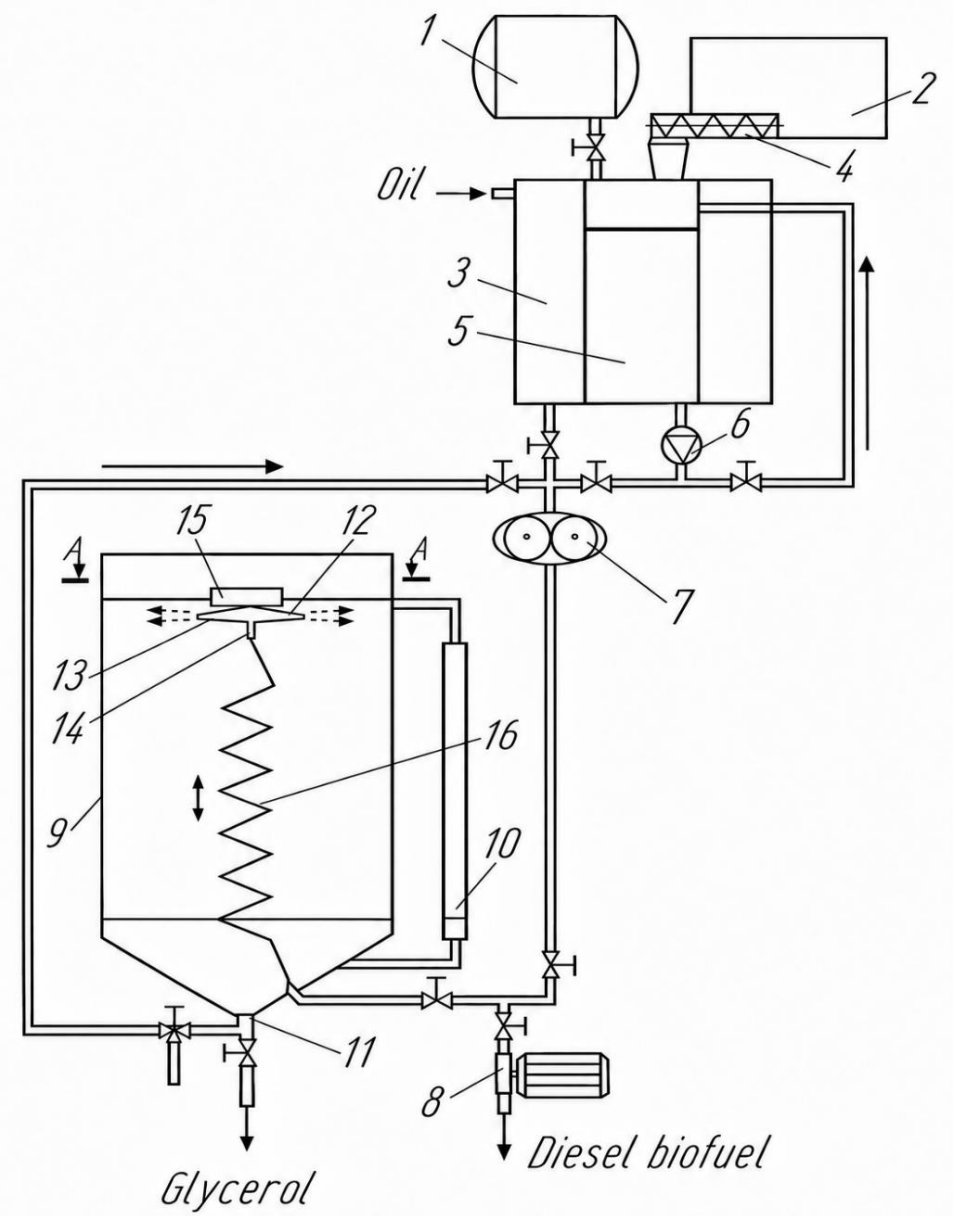


**1 – methyl alcohol container; 2 – catalyst container; 3 – fat container; 4 – catalyst dispenser; 5 – catalyst dissolution tank; 6, 7, 8 – pumps for circulation and supply of catalyst solution in methyl alcohol, for circulation and supply of emulsion and for pumping diesel biofuels; 9 – gravity separator; 10 – transparent measuring device; 11 – nozzle for mixing the emulsion and removing glycerin sediment; 12, 13 – upper and lower part of the emulsion turbulation device; 14 – nozzle for emulsion supply and removal of diesel biofuels; 15 – float device; 16 – coil spring**

**Fig. 3.21. Equipment for the production of diesel biofuels (Ukrainian patents for invention 116032 and 119306)**



**Fig. 3.22. The equipment for the production of diesel biofuels designed for farms**

The equipment provides quality indicators of diesel biofuels, as well as automatic pumping of diesel biofuels from the top layer of the gravity separator.

### 3.5. Theoretical foundations of diesel biofuel production

According to the expert assessment of the quality indicators of diesel biofuels, the kinematic viscosity and flash point are significant indicators of the quality of diesel biofuels produced. Their total weight is 60%, and therefore it is advisable to determine the quality assessment of diesel biofuels by the following expression:

$$I_Q = \alpha\left(\upsilon_F > \upsilon_N; \frac{\upsilon_F - \upsilon_N}{\upsilon_N}; 0\right) + \beta\left(T_{FF} > T_{FN}; \frac{T_{FN} - T_{FF}}{T_{FN}}; 0\right), \qquad (3.7)$$

where $I_Q$ – indicator of the deviation of the actual values of diesel biofuel quality

from the standard ones (generalized quality indicator), %; $\alpha$ – weight of the kinematic viscosity index of fuel, %; $\nu_F$, $\nu_N$ – actual and standard values of kinematic viscosity, mm$^2$/sec; $\beta$ – flash point weight, %; $T_{FF}$, $T_{FN}$ – actual and standard flash point values,°C.

It was found that the kinematic viscosity of diesel biofuels depends on the concentration of potassium methylate, and the flash point – on the time of settling with air access.

Experimental studies have shown (fig. 3.23), that with an increase in the concentration of potassium methylate during esterification of vegetable oil, the kinematic viscosity decreases. When adding 143 g or more of potassium methylate per liter of rapeseed oil, the kinematic viscosity will meet the requirements of DSTU 6081:2009.

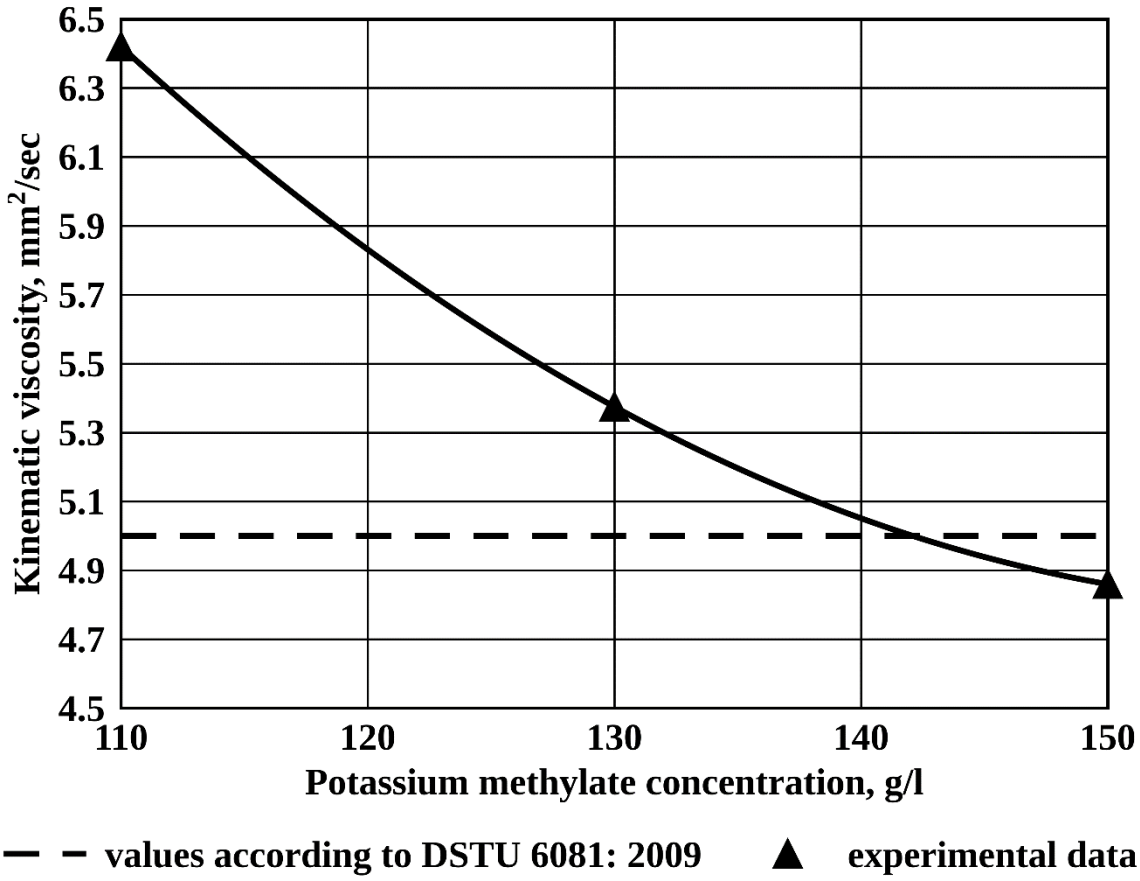


**Fig. 3.23. Dependence of kinematic viscosity on the concentration of potassium methylate**

With increasing settling time of the methyl ether (fig. 3.24) increases its flash point, which is explained by the gradual release of methyl alcohol residues. The required settling time of methyl ether to obtain a normalized flash point according to DSTU 6081:2009 is at least 148 hours.

To determine the yield coefficient of diesel biofuels, use the expression:

$$k_{DBF} = \frac{V_{DBF}}{V_O} 100\%, \quad (3.8)$$

where $k_{DBF}$ – diesel biofuel yield factor, %; $V_{DBF}$ – volume of diesel biofuel, l;

$V_O$ – oil volume, l.

To determine the performance of the certification process of seed oil in diesel biofuels, the expression is used:

$$Q = \frac{V_O k_{DBF}}{\tau_P + \tau_M + \tau_S}, \quad (3.9)$$

where $Q$ – productivity of the esterification process, m$^3$/h; $k_{DBF}$ – diesel biofuel yield factor, rel. units; $\tau_P$ – time of injection of a mixture of seed oil and potassium methylate into the reactor, h; $\tau_M$ – mixing time, h; $\tau_S$ – settling time of the mixture for diesel biofuel and glycerin sediment, h.

The consumed electricity is determined by the expression:

$$W = \frac{P_P \tau_P + P_M \tau_M}{1000} \quad (3.10)$$

where $W$ – electricity consumed, kWh; $P_P$ – actual pump power when pumping a mixture of seed oil and potassium methylate into the reactor, W, $P_M$ – actual pump power when mixing the mixture, W.

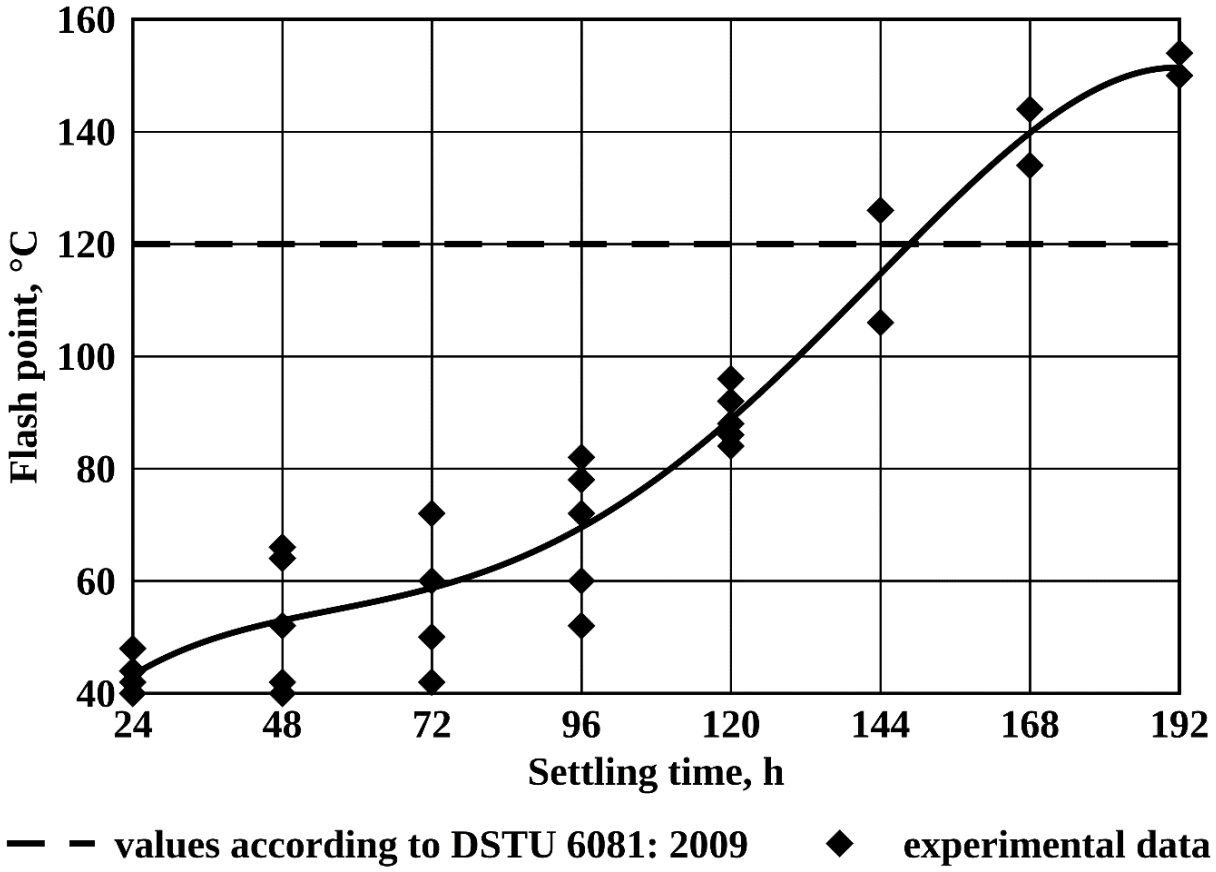


**Fig. 3.24. Dependence of the flash point on the settling time of methyl ether with air access**

Specific electricity costs for the production of diesel biofuels are determined by the expression:

$$E = \frac{W}{V_{DBF}} 1000 \quad (3.11)$$

where $E$ – specific electricity consumption, kWh/ m$^3$.

These dependencies allow determining the main quality and energy indicators of diesel biofuel production.

### 3.6. Economic efficiency of diesel biofuel production

From the comparison of the energy equivalents of the typical needs of agroecosystem in diesel fuel and biodiesel produced for the needs of the agroecosystem, the received ratio of the area under rapeseed needed for biodiesel production for the needs of agroecosystem to the total area of crop rotation will be:

$$\frac{S_R}{S_{CR}} = \frac{\alpha_{DF}\gamma_{DF}}{Y_R k_{RS} k_O k_{DBF} \gamma_{DBF}}, \quad (3.12)$$

where $S_R$ – the area under rapeseed necessary for the production of diesel biofuels for the needs of the agroecosystem, ha; $S_{CR}$ – total area of crop rotation, ha; $\alpha_{DF}$ – typical demand of the agroecosystem for diesel fuel, kg/ha; $\gamma_{DF}$ – calorific value of diesel fuel, MJ/kg; $Y_R$ – the yield of rapeseed, kg/ha; $k_{RS}$ – the yield ratio of rapeseed, rel. un.; $k_o$ – the ratio of the yield of oil from rapeseed, rel. un.; $k_{DBF}$ – coefficient of diesel biofuel output from oil, rel. un.; $\gamma_{DBF}$ – calorific value of diesel biofuel, MJ/kg.

The graphical dependence of the ratio of the area under rapeseed needed for biodiesel production for the agroecosystem needs to the total area of crop rotation on the yield of rapeseed and typical need of the agroecosystem in diesel fuel, for clarity, is shown in fig. 3.25.

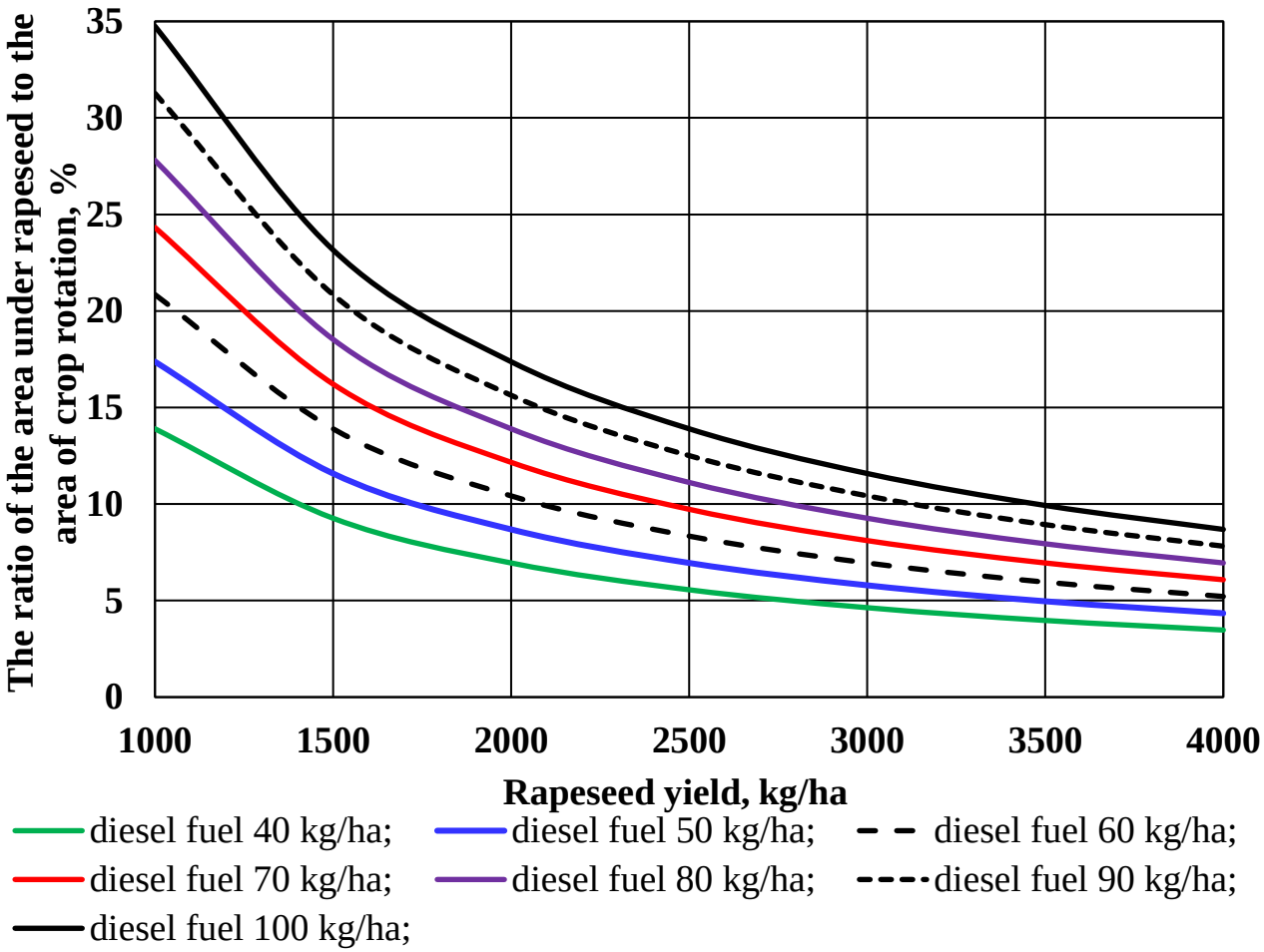


**Fig. 3.25. The dependence of the ratio of the area under rapeseed needed for biodiesel production for the needs of agroecosystem for total area of crop rotation to the typical needs of the agroecosystem in diesel fuel and rapeseed yield**

Thus, at the average typical need of the agroecosystem in diesel fuel from 60 to 80 kg/ha the ratio of the area under rapeseed needed for biodiesel production for the needs of agroecosystem for the total area of crop rotation with grain yield of rapeseed from 1500 to 2500 kg/ha is from 8.3 to 18.5%, or in average from 10.4 to 13.9%, which is less than the area of one field in a six-field crop rotation.

In agricultural production, it is advisable to use small units and mini-plants for the production of diesel biofuels with a capacity of 30 to 300 tons per year for their own needs. In this case, agricultural enterprises have the opportunity to save working capital and at the same time fully provide themselves with diesel biofuels, and the livestock industry with cake.

Production costs for the production of diesel biofuels using BDU-100 equipment with a capacity of 100 l/h during 2008-2013, are provided in the table 3.1. As it can be seen from the table, production costs for the production of diesel biofuels have actually doubled over the past 5 years due to an increase in the cost of equipment, the cost of electricity and wage growth.

**Table 3.1. Production costs for the production of diesel biofuels**

| Equipment brand | **BDU-100** | **2008** | **2009** | **2010** | **2011** | **2012** | **2013** |
|---|---|---|---|---|---|---|---|
| Productivity | l/h | **100** | | | | | |
| | t/year | **50** | | | | | |
| Investment | UAH | **29000** | **33263** | **35558** | **37941** | **39686** | **40281** |
| Depreciation charges | UAH/year | **2320** | **2661** | **2845** | **3035** | **3175** | **3222** |
| | UAH/t | **46.40** | **53.22** | **56.89** | **60.70** | **63.50** | **64.45** |
| Deductions for maintenance | UAH/year | **1740** | **1996** | **2133** | **2276** | **2381** | **2417** |
| | UAH/t | **34.80** | **39.92** | **42.67** | **45.53** | **47.62** | **48.34** |
| Cost of electricity | UAH/kW h | **0.43** | **0.52** | **0.60** | **0.73** | **0.73** | **0.79** |
| Energy costs | UAH/t | **3.88** | **4.73** | **5.44** | **6.66** | **6.66** | **7.20** |
| Number of service personnel | people | **1 (part-time worker)** | | | | | |
| Monthly salary of service personnel | UAH/month | **1101** | **1220** | **1430** | **1759** | **2086** | **2340** |
| Personnel salary fund | UAH/year | **18206** | **20174** | **23646** | **29616** | **34494** | **38694** |
| | UAH/t | **364.12** | **403.48** | **472.93** | **592.32** | **686.88** | **773.88** |
| Total expenses | UAH/t | **402.80** | **448.1** | **521.0** | **644.5** | **744.2** | **829.4** |
| General production costs | % | **5** | | | | | |
| | UAH/t | **20.14** | **22.41** | **26.1** | **32.23** | **37.21** | **41.47** |
| General economic expenses | % | **10** | | | | | |
| | UAH/t | **40.28** | **44.81** | **52.10** | **64.45** | **74.42** | **82.94** |
| Unit production costs | UAH/t | **463.22** | **515.34** | **599.20** | **742.18** | **855.79** | **953.83** |

Technical and economic indicators of diesel biofuel production (table 3.2) were determined at its oil output of 95%, rapeseed oil consumption of 53 t/year, glycerol sediment output of 10.7 t/year, and the ratio of methanol and oil of 0.14 rel. units and catalyst and methanol 0.1 rel. units, as well as, respectively, methanol consumption of 7.37 t/year and catalyst consumption of 0.74 t/year. The calorific value of diesel fuel was calculated at 42 MJ/kg, and diesel biofuels-37 MJ/kg.

The density of diesel biofuels was assumed to be 840 kg/m$^3$. The rate of depreciation deductions was taken at the level of 8%, and deductions for maintenance and repairs at the level of 6%.

The unit consumption of electricity was 9.1 kW h/t (installed power of 1 KW, power utilization factor of 0.8 rel. units). The amount of deductions to social funds from salaries was accepted at the level of 37.8%.

**Table 3.2. Technical and economic indicators of diesel biofuel production**

| Equipment brand | BDU-100 | 2008 | 2009 | 2010 | 2011 | 2012 | 2013 |
|---|---|---|---|---|---|---|---|
| Cost of methanol | UAH/t | **5000** | **5660** | **6424** | **8011** | **8596** | **7907** |
| Cost of the catalyst | UAH/t | **17800** | **20150** | **22870** | **28519** | **30600** | **28148** |
| Cost of reagents | UAH/t | **999.16** | **1131.05** | **1283.74** | **1600.82** | **1717.68** | **1580.01** |
| Price of glycerin sediment | UAH/t | **1355** | **1534** | **1741** | **2171** | **2329** | **2143** |
| Cost of glycerin sediment | UAH/t | **290.97** | **329.38** | **373.84** | **466.18** | **500.21** | **460.12** |
| Cost of oil | UAH/t | **2930** | **3857** | **4516** | **6197** | **6494** | **5814** |
| Cost of oil | UAH/t | **3085** | **4060** | **4762** | **6524** | **6836** | **6120** |
| Production cost of DBF | UAH/t | **4256** | **5377** | **6263** | **8400** | **8909** | **8193** |
| Cost of DF per year of DBF use | UAH/l | **5.19** | **6.43** | **8.97** | **9.51** | **9.27** | **13.98** |
| | UAH/t | **6175** | **7653** | **10683** | **11326** | **11034** | **16640** |
| Profit | UAH/t | **869** | **955** | **2682** | **944** | **148** | **5824** |
| Profit after tax | UAH/t | **609** | **668** | **1878** | **661** | **103** | **4077** |
| Profitability | % | **14.3** | **12.4** | **30.0** | **7.9** | **1.2** | **49.8** |
| Payback period | years | **0.95** | **1.00** | **0.38** | **1.15** | **7.68** | **0.20** |
| Average value | years | **1.89** | | | | | |

As can be seen from the table, the price of seed oil in 2013 was 2 times higher than in 2008, the price of methyl alcohol and catalyst increased by 1.7 times over the same period, and the price of diesel fuel increased by 2.5 times. And this, in turn, affects the level of profitability of diesel biofuel production and profit. As the prices of petroleum products increase every year, the cost of raw materials and chemical components also increases, and this in turn affects the level of profitability of diesel biofuel production and profit.

Thus, it is advisable to assess the economic efficiency of diesel biofuel production taking into account the individual characteristics of a particular farm.

**Questions for self-assessment:**

1. What are the main operations of the technological process when using industrial technology for the production of seed oil?
2. What technological operations are missing in the agro-industrial technology of diesel biofuel production when compared to industrial one?
3. What percentage of oil is produced in agriculture using agro-industrial technology?
4. Describe the technological scheme of agro-industrial production of diesel biofuels using two-stage oil expression.
5. What are the main operations of the diesel biofuel production process?
6. What are the main advantages of small plants for agro-industrial production of diesel biofuels?
7. What is the need to use two-stage expressing to produce seed oil?
8. How can the price of second (hot) expressed oil be determined depending on the price of first (cold) expressed oil if the yield coefficients of first (cold) and second (hot) expressed oil are the same?
9. What are the main disadvantages of using two-stage oil production?
10. How is the economic efficiency of diesel biofuel production achieved when using two-stage expression?
11. Describe the dependence of the price of second (hot) expressed oil on the price of first (cold) expressed oil.
12. What are the main disadvantages of existing units for diesel biofuel production?
13. What substances should be removed from diesel biofuels?
14. What reactors are used for the production of diesel biofuels? Describe them.
15. What are the main advantages of small plants for agro-industrial production of diesel biofuels?
16. How is the economic efficiency of diesel biofuel production achieved?
17. What factors determine the cost of diesel biofuel production?
18. What is the most effective way to mix a mixture of oil and potassium methylate?
19. What is the esterification process?
20. What is the yield of diesel biofuel from seed oil?
21. What indicators are used to assess the quality of diesel biofuels produced?
22. How does the kinematic viscosity of diesel biofuels change depending on the concentration of potassium methylate?
23. How does the flash point of diesel biofuel change depending on the time of its settling with air access?
24. How is the yield factor of diesel biofuels determined?
25. How is the performance of the certification process for seed oil in diesel biofuels determined?
26. How are the unit costs of electricity for the production of diesel biofuels determined?
27. Describe the operation of diesel biofuel production equipment with the use of hydro-mechanical mixing.

**References:**


1. Golub G. A., Pavlenko M. Yu., Chuba V. V., Kukharets S. M. Production and use of diesel biofuels based on vegetable oils. Kyiv : NULES of Ukraine, 2015. 119 p.
2. Golub G. A., Pavlenko M. Yu., Osaulenko S. V. Efficiency of diesel biofuel production in the conditions of farms. *MOTROL. Commission of Motorization and Energetics in Agriculture*. 2014. Vol. 16, No. 4. P. 263–268.
3. Golub G. A., Pavlenko M. Yu. Estimation of raw material base of diesel biofuel production at two-stage extraction of vegetable oil. *Scientific Bulletin of the National University of Life and Environmental Sciences of Ukraine. Series: Machinery and energy of agro-industrial complex*. 2014. Iss. 194, Part 1. P. 175–181.
4. Golub G. A., Chuba V. V., Pavlenko M. Yu. Directions for improving the production and use of diesel biofuels. *Collection of scientific works of VNAU*. 2012. Iss. 10, Vol. 1 (58). P. 20–23.
5. Golub G. A., Pavlenko M. Yu., Achkevich O. M. Technological scheme of production of compound feeds and diesel biofuel. *Bulletin of ZhNAEU*. 2015. No. 2 (50), Vol. 1. P. 364–368.
6. Golub G. A., Chuba V. V., Virjovka M. I. Features of installations for the production of diesel biofuels. *Industrial Hydraulics and Pneumatics*. 2011. No. 2 (32). P. 91–95.
7. Golub G. A., Pavlenko M. Yu., Osaulenko S. V. Economic efficiency of diesel biofuel production in the conditions of farms. *Bulletin of ZhNAEU*. 2014. No. 2 (45), Vol. 4, Part 2. P. 272–278.
8. Golub G. A., Pavlenko M. Yu., Olar N. Estimation of the raw material base for the production of diesel biofuels with two-stage extraction of vegetable oil. *MOTROL. Commission of Motorization and Energetics in Agriculture*. 2014. Vol. 16, No. 3. P. 26–33.
9. Golub G. A., Pavlenko M. Yu., Kukharets S. M. Efficiency of use of equipment for production of diesel biofuel. *MOTROL. Commission of Motorization and Energetics in Agriculture*. 2015. Vol. 17, No. 3. P. 11–16.
10. Golub G. A., Pavlenko M. Yu., Achkevich O. M. Improving the technological scheme of production of compound feeds and diesel biofuels. *MOTROL. Commission of Motorization and Energetics in Agriculture*. 2015. Vol. 17, No. 4. P. 187–191.
11. Kukharets S. M., Golub G. A., Hrus V. M. Analysis of the process of obtaining biodiesel fuel and substantiation of the main parameters of the separator reactor. *Modern problems of sustainable nature management* : collection of scientific works of Podolsk State Agrarian and Technical University. 2014. Special issue for the IX scientific-practical conference. P. 137–143.
12. Pavlenko M. Yu., Golub G. A. Energy intensity of hydromechanical mixing in the production of diesel biofuels. *Bulletin of Sumy National Agrarian University. Series "Mechanization and automation of production processes"*. 2014. Iss. 11 (26). P. 39–41.
13. Golub G. A., Dubrovin V. O., Pavlenko M. Yu., Chuba V. V. Production and use of biodiesel in agrosystems. *The 8th International Research and Development*

*Conference of Central and Eastern European Institutes of Agricultural Engineering* : proceedings. Poznan ; Puszczykowo, 2013. P. 49–53.

14. Golub G. A., Pavlenko M. Yu., Chuba V. V. The relationship between the power of the pump for mixing vegetable oil and the parameters of the disk mixer. *Scientific Bulletin of the National University of Life and Environmental Sciences of Ukraine. Series: Machinery and energy of agro-industrial complex*. 2015. Iss. 240. P. 343–348.

15. Golub G. A., Kukharets S. M., Pavlenko M. Yu. Prospects for the use of circulating mixing equipment in the production of diesel biofuels. *Scientific Bulletin of the National University of Life and Environmental Sciences of Ukraine. Series: Machinery and energy of agro-industrial complex*. 2015. Iss. 240. P. 377–382.

16. Golub G. A., Kukharets S. M., Chuba V. V., Pavlenko M. Yu., Yarosh Y. D. Modelling of the hydro-mechanical mixer parameters. *INMATEH – Agricultural Engineering*. 2018. Vol. 54, No. 1. P. 105–112.

17. Golub G. A., Marus O. A., Chuba V. V., Pavlenko M. Yu. Research of the hydro-mechanical mixer parameters for diesel biofuel production with using Box-Benghken experiment plan. *Agricultural Engineering International: CIGR Journal*. 2019. Vol. 21, No. 4. P. 121–131.

18. Golub G. A., Chuba V. V., Marus O. A. Determination of fuel consumption by machine-tractor unit during field tests. *Scientific Bulletin of the National University of Life and Environmental Sciences of Ukraine. Series: Machinery and energy of agro-industrial complex*. 2015. Iss. 224. P. 303–309.

19. Golub G. A., Chuba V. V. Research of heating of diesel biofuel before injection into engine cylinders. *Technical and technological aspects of development and testing of new equipment and technologies for agriculture of Ukraine* : collection of scientific works. 2015. Iss. 19 (33). P. 271–275.

20. Golub G. A., Chuba V. V., Zubko V. M. Diesel biofuel heating modes in the fuel tank. *Bulletin of Sumy National Agrarian University. Series "Mechanization and automation of production processes"*. 2014. Iss. 11 (26). P. 70–74.

21. Golub G. A., Chuba V. V. Operational parameters of the engine when using diesel biofuel. *Scientific Bulletin of the National University of Life and Environmental Sciences of Ukraine. Series: Machinery and energy of agro-industrial complex*. 2014. Iss. 196, Part 1. P. 23–31.

22. Golub G. A., Chuba V. V. Modeling of operational performance of MTU on diesel biofuel. *MOTROL. Commission of Motorization and Energetics in Agriculture*. 2014. Vol. 16, No. 3. P. 66–73.

23. Golub G. A., Chuba V. V. Estimation of fuel consumption in the use of diesel biofuels. *Mechanization and electrification of agriculture* : interdepartmental thematic scientific collection. 2014. Iss. 99, Vol. 2. P. 76–83.

24. Golub G. A., Chuba V. V. Mathematical modeling of operational indicators of the machine-tractor unit on diesel biofuel. *Scientific Bulletin of the National University of Life and Environmental Sciences of Ukraine. Series: Machinery and energy of agro-industrial complex*. 2014. Iss. 194, Part 1. P. 181–187.

25. Golub G. A., Chuba V. V. MTU operational parameters when working on diesel biofuel. *Mechanization, greening and conversion of biological raw materials in animal husbandry*. 2012. Vol. 2 (10). P. 23–32.

26. DSTU 3868-99. Diesel fuel. Specifications. [Valid from 1999-09-01]. Official ed. Kyiv : Derzhstandart of Ukraine, 1999.

27. DSTU 6081:2009. Motor fuel. Esters of methyl fatty acids of oils and fats for diesel engines. Technical requirements.

28. Nadykto V., Didur V., Fedorenko V. Influence of Biodiesel on the Operational Performance of Machine-Tractor Units. *Tekhnika i tekhnolohiyi APK*. 2008. No. 1. P. 27–29.

29. Semenov V. G., Chernenko S. M., Atamas S. M. Determination of lower heat of combustion of biodiesel according to chromatographic data. *Scientific works of Kremenchug State University named after M. Ostrogradsky*. 2010. Vol. 2, Part 1. P. 87–91.

30. Semenov V. G. Analysis of diesel performance on petroleum and alternative fuels of vegetable origin. *Collection of scientific papers of the National Technical University "KhPI"*. 2002. No. 3. P. 177–197.

31. Correlating Chemical Structure and Physical Properties of Vegetable Oil Esters / J. de A. Rodriguez Jr., F. de P. Cardoso, E. R. Lachter et al. *Journal of the American Oil Chemists' Society*. 2006. Vol. 83, No. 4. P. 353–357.

32. Dunn R. O. Effects of minor constituents on cold flow properties and performance of biodiesel. *Progress in Energy and Combustion Science*. 2009. Vol. 35. P. 481–489.

33. Golub G. A., Kukharets S. M., Yarosh Y. D., Kukharets V. V. Integrated use of bioenergy conversion technologies in agroecosystems. *INMATEH – Agricultural Engineering*. 2017. Vol. 51, No. 1. P. 93–100.

34. Golub G. A., Kukharets S. M., Chuba V. V., Pavlenko M. Yu., Yarosh Y. D. Rationale for the parameters of equipment for production and use of biodiesel in agricultural production. *Eastern-European Journal of Enterprise Technologies*. 2017. Vol. 2/1 (86). P. 28–33.

35. Golub G. A., Chuba V. V., Kepko O. I. Research on temperature preparation of diesel biofuel in an energy vehicle fuel tank. *INMATEH – Agricultural Engineering*. 2018. Vol. 56, No. 3. P. 101–108.

36. Golub G. A., Kukharets S. M., Yarosh Y. D., Chuba V. V., Medvedskyi O. V. Modeling of the disk nozzle parameters in biodiesel production. *International Journal of Renewable Energy Research*. 2018. Vol. 8, No. 4. P. 2096–2105.

37. Golub G. A., Chuba V. V., Yarosh Y. D. The study of the biofuel-operated diesel engine with heating. *International Journal of Renewable Energy Research*. 2019. Vol. 9, No. 3. P. 1283–1290.

38. Golub G. A., Chuba V. V., Marus O. A. Modeling of transition processes and fuel consumption by machine-tractor unit using biofuel. *INMATEH – Agricultural Engineering*. 2019. Vol. 58, No. 2. P. 45–56.

39. Golub G. A., Skydan O. V., Kukharets V. V., Yarosh Y. D., Kukharets S. M. The estimation of energetically self-sufficient agroecosystem's model. *Journal of Central European Agriculture*. 2020. Vol. 21, No. 1. P. 168–175.

# 4. USE OF DIESEL BIOFUEL

**Lecture Plan:**

**4.1. Basic properties of diesel biofuel based on vegetable oils as a motor fuel 74**
**4.2. Operational parameters of the diesel engine operation when using diesel biofuel 77**
**4.3. Kinematic viscosity of diesel biofuel 79**
**4.4. Improving the efficiency of using diesel biofuel 82**
**4.5. Production inspection of the MTU operation using a two-stage heating system for diesel biofuel 89**
**4.6. Organizational aspects of diesel biofuel use 91**
**4.7. Economic efficiency of using diesel biofuel 93**

## 4.1. Basic properties of diesel biofuel based on vegetable oils as a motor fuel

Diesel biofuel is a fuel produced from vegetable oils or animal fats, which in its characteristics is similar to diesel fuel and can be used in diesel engines, both in mixtures with diesel fuel and in pure form.

The main technical problem with the widespread introduction of diesel biofuel is the need to adapt existing diesel engines to this type of fuel due to the difference in some physical properties of this type of fuel compared to diesel fuel (table 4.1).

Data analysis in table 4.1 shows that diesel biofuel is closest in energy capacity and chemical composition to diesel fuel, so their use requires minimal changes in the power supply system of a diesel engine.

The advantages of diesel biofuel over diesel fuel include:

– renewable raw material base;
– significantly lower carbon dioxide emissions, like greenhouse gas, into the atmosphere;
– better lubricating properties, which reduces weariness of the high-pressure fuel pump and increases its service life;
– higher fire safety, as it has a higher auto-ignition temperature;
– higher cetane rating;
– almost complete absence of sulfur in the fuel;
– no harm if it enters the environment, as it is processed by soil microorganisms within 3-4 weeks;
– the possibility of its use both in its pure form and in a mixture with diesel fuel in any proportions.

The disadvantages of diesel biofuel, which are difficult to eliminate in one way or another during the production process, include:

– higher kinematic viscosity;
– higher limit filtration and solidification temperature;
– aggressive effect on natural rubber and some elastomers;
– rather low oxidative stability in the open air;
– lower calorific value.

**Table 4.1. Physical properties of diesel fuel, diesel biofuel and rapeseed oil**

| Characteristics | Diesel fuel | Diesel biofuel | Rapeseed oil |
|---|---|---|---|
| Cetane rating, not less than | 45 | 51 | – |
| Density, kg/m$^3$ | 860 | 860–900 | 952 |
| Kinematic viscosity, mm$^2$/sec | 3.0–6.0 | 3.5–5 | 78.7 |
| Overclocking temperature, °C<br>5%<br>50%<br>96% | <br>214<br>280<br>370 | <br>326<br>335<br>341 | <br>300<br>–<br>– |
| Water content (according to the Karl Fischer method), mg/kg | 52 | 500 | 310 |
| Mass fraction of sulfur, % not more than | 0.288 | 0.001 | 0.009 |
| Flash point in a closed crucible, not less than, °C | 40 | 120 | 324 |
| Maximum filterability temperature, °C not more than | -5 | +5 | – |
| Coking capacity of 10% of the residue, % not more than | 0.3 | 0.3 | <0.01 |
| Ash content, % max | 0.01 | 0.02 | <0.01 |
| Content, %<br>C<br>H<br>O | <br>87<br>12.6<br>– | <br>77.4<br>12.3<br>10 | <br>77<br>12<br>11 |
| Lower combustion value, MJ/kg | 42.5 | 37.1– 37.8 | 36 |

The lower caloric content of diesel biofuel by 13-15% is due to the lower carbon content of diesel biofuel, which leads to an increase in hourly and specific fuel consumption. The presence of 10-11% oxygen in diesel biofuel allows intensifying the combustion process and provides an increase in the combustion temperature in the engine cylinder. On the one hand, this helps to increase the indicator and effective efficiency of the engine, and on the other – to increase the content of nitrogen oxides in the exhaust gases.

The high kinematic viscosity of diesel biofuel affects the process of its filtration, passage through fuel lines, as well as the process of fuel spraying.

One of the most important characteristics of diesel fuel that provides fuel supply and filtration is its mobility at low temperatures. Low-temperature properties of fuel are estimated by the temperatures of turbidity, at which the gas composition of the fuel changes (along with the liquid phase, a solid phase appears), and solidification, at which the fuel completely loses mobility.

A significant influence on the properties of diesel biofuel has the type of vegetable oil from which it is obtained, because the content of fatty acids in each plant is different and varies quite widely, and even in plants of the same type can differ significantly depending on the variety and growing conditions. The composition of fatty acids of vegetable oil determines the calorific value, viscosity and density of

diesel biofuel, which in turn determine the application features and operational parameters of the machine-tractor unit (MTU).

Table 4.2 shows the main properties of diesel biofuel from oilseeds that are grown in Ukraine and have a significant impact on the use of diesel biofuel.

**Table 4.2. Properties of diesel biofuel produced from the main oilseeds of Ukraine**

| Type of vegetable oil | Indicators | | | |
|---|---|---|---|---|
| | Density,* kg/m$^3$ | Kinematic viscosity*, mm$^2$/sec | Flash point in an open crucible, °C | Volume yield of biofuel, % |
| **Rape** | **878** | **7.7** | **135** | **86.5** |
| **Flax** | **887** | **7.11** | **140** | **89.3** |
| **Soy** | **880** | **7.88** | **137** | **83.2** |
| **Camelina** | **885** | **8.0** | **136** | **85.4** |
| **Mustard** | **878** | **7.83** | **121**** | **86.5** |
| **Sunflower** | **885** | **7.94** | **123**** | **83.3** |

* – data obtained at temperature 20°C;

** – flash point in a closed crucible.

Analysis of the table shows that the indicators of diesel biofuel obtained from different vegetable oils do not differ significantly, but they should be noted some differences in the volume yield of diesel fuel from vegetable oils.

Table 4.3 shows the results of studies of the turbidity and solidification temperatures of diesel biofuel obtained from the most common vegetable oils.

**Table 4.3. Turbidity and solidification temperatures of diesel biofuel made from various vegetable oils**

| Indicator | Diesel biofuel based on | | |
|---|---|---|---|
| | soy oil | sunflower oil | rape oil |
| **Turbidity temperature, °C** | **10** | **9.6** | **7.9** |
| **Solidification temperature, °C** | **2.7** | **0.9** | **-0.8** |

The analysis shows that the maximum ambient temperature that allows the operation of a diesel engine without the use of heating diesel biofuel in the fuel tank is about 10 °C.

According to the analysis of the properties of diesel biofuel based on vegetable oils the following conclusions can be drawn:

– diesel biofuel based on methyl esters fatty acids and vegetable oils are most suitable as fuel for diesel internal combustion engines;

– when using diesel biofuel there will be an increase in its consumption compared to diesel fuel;

– the ambient temperature at which clean diesel biofuel can be used is higher than 10 °C.

### 4.2. Operational parameters of the diesel engine operation when using diesel biofuel

On the basis of the conducted experimental studies of the operation of the D-65N diesel engine on regulatory characteristics (fig. 4.1) it was established that when using diesel biofuel and their mixtures, the power and torque that the engine develops remain at the same level as when using diesel fuel, but there is an increase in hourly and specific fuel consumption. According to the conducted studies, the hourly fuel consumption in the maximum power mode when using diesel biofuel was 12.92 kg/h, diesel fuel – 11.5 kg/h, a mixture of 75% diesel fuel and 25% diesel biofuel – 11.84 kg/h, a mixture of 50% diesel fuel and 50% diesel biofuel – 12.27 kg/h. The specific fuel consumption for all these types of fuel was respectively 276 g/kWh, 254 g/kWh, 260 g/kWh and 268 g/kWh.

In particular, when switching from diesel fuel to using a mixture of 75% diesel fuel and 25% diesel biofuel, fuel consumption increases by an amount of 2 to 8%, when using 50% diesel fuel and 50% diesel biofuel – by an amount of 7 to 12%, and when using pure diesel biofuel – by an amount of 13.5 to 18% depending on the engine load.

Similar results were obtained when using diesel biofuel and their mixtures for engines of other brands.

Thus, during braking tests of the D-248 engine using diesel biofuel and its mixtures with diesel fuel, an increase in hourly fuel consumption from 4% to 18% was obtained, depending on the composition of the fuel mixture. When the engine was running on fuel mixtures with a share of diesel biofuel of 40%, 60%, 80% and 100%, the specific fuel consumption was 241, 243, 255 and 271 g/kWh, respectively, against 230 g/kWh when running on diesel fuel, which is by 3.5%; 6.5 %; 11.3% and 17.8% more than the specific consumption of diesel fuel. When the D-238 engine is running on diesel fuel, they were obtained the results that showed that when the same power is reached, fuel consumption when running on diesel biofuel increases by an amount of 12 to 20%.

Analysis of the obtained regulatory characteristics of the SMD-14N engine operation (fig. 4.2) on diesel fuel and diesel biofuel, as well as their mixtures with different concentrations, showed that there is a decrease in effective engine power by 12% against the background of a simultaneous increase in specific fuel consumption from 10 to 17%, depending on the concentration of diesel biofuel in the fuel mixture.

Most researchers attribute the increase in fuel consumption, which does not correspond to the difference in the calorific value of diesel biofuel and diesel fuel, to differences in the density and kinematic viscosity of this type of fuel.

Higher by 10% density and 1.5 times kinematic viscosity of diesel biofuel cause an increase in the range of the fuel torch by 14% and an increase in the diameter of sprayed fuel droplets, which leads to a violation of mixture formation and an increase in the auto-ignition delay period, resulting in a decrease in the effective combustion pressure, which leads to a decrease in the combustion efficiency of diesel biofuel.

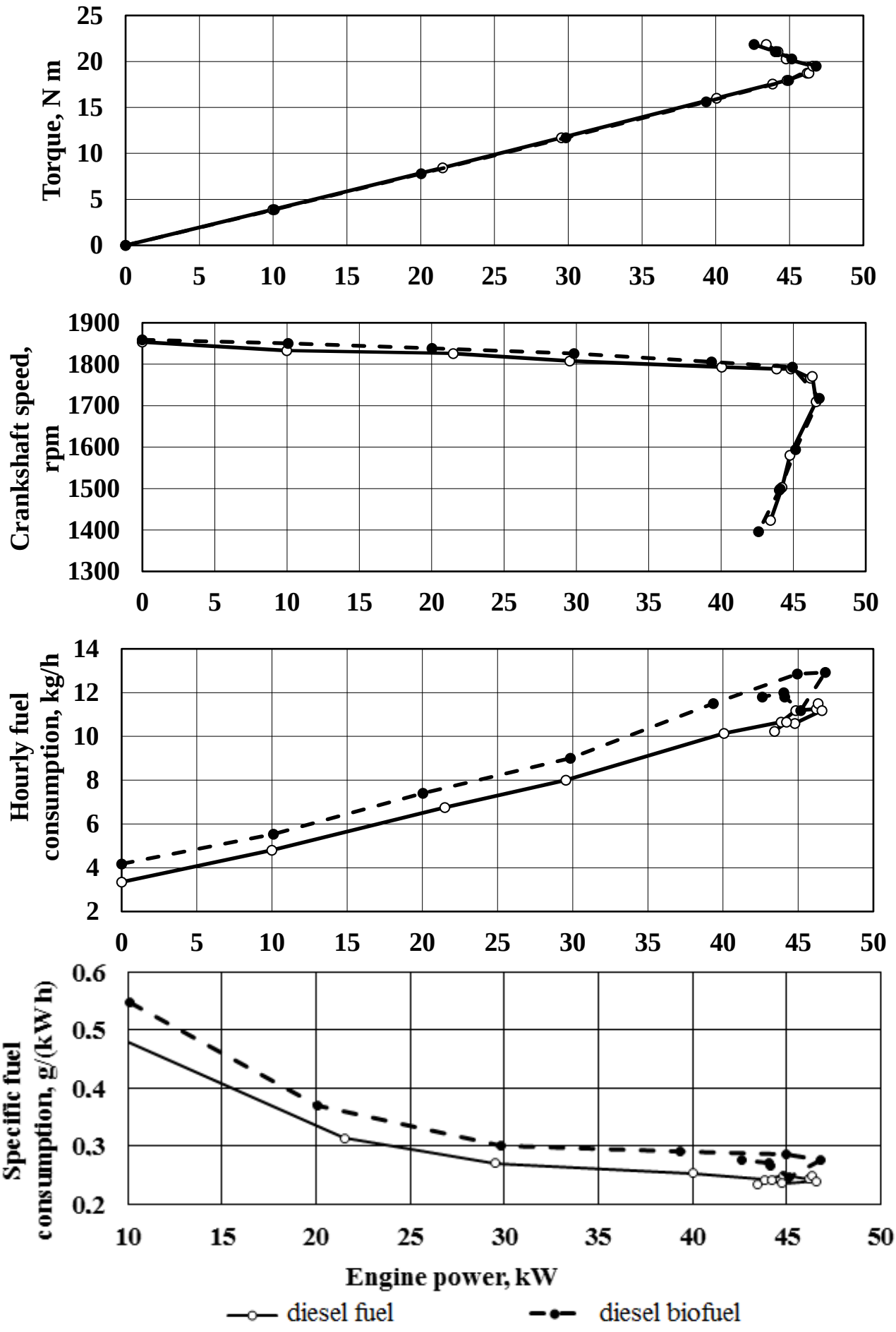


**Fig. 4.1. Regulatory characteristics of the D-65N engine**

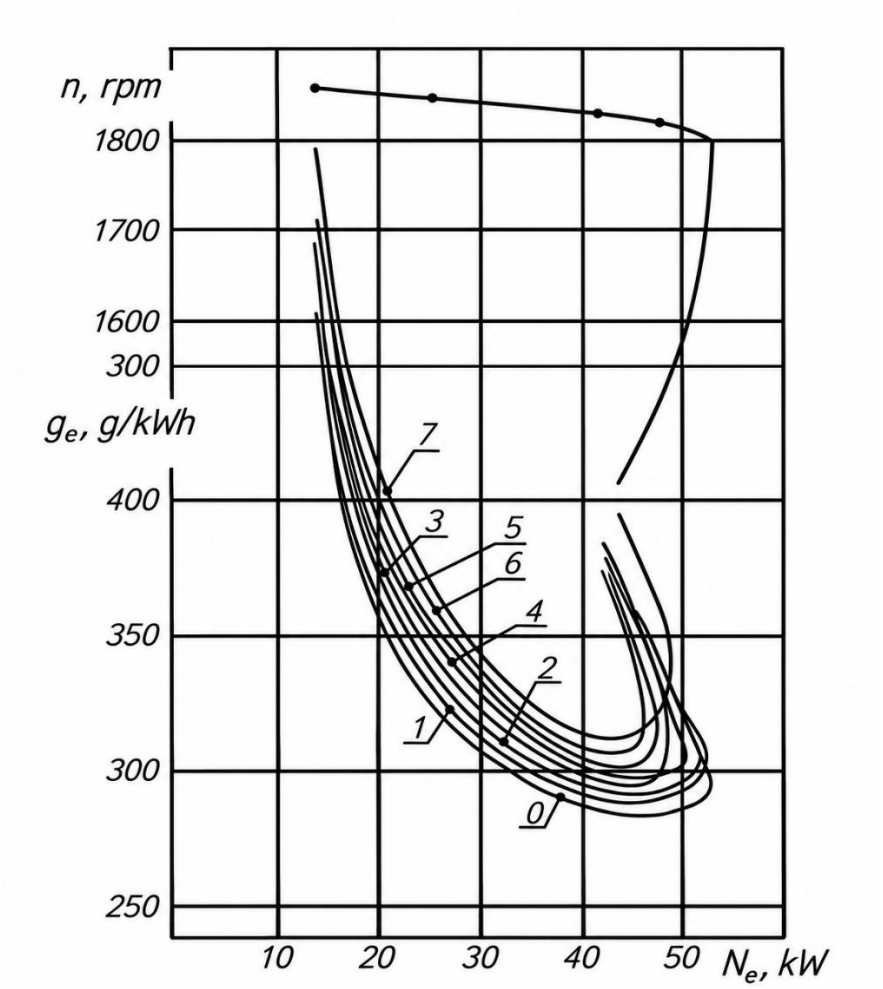


**0 – diesel fuel (DF); 7– diesel biofuel (DBF); 1 – 95 % DF+5 % DBF; 2 – 90 % DF+10 % DBF; 3 – 80% DF+20% DBF; 4 – 70 % DF+30 % DBF; 5 – 50 % DF+50 % DBF; 6 – 30 % DF+70% DBF**

**Fig. 4.2. Regulatory characteristics of the SMD-14N engine**

On the basis of a comparative analysis of the operational parameters of a diesel engine running on diesel biofuel and diesel fuel the following conclusions can be drawn:

– power and torque are almost unchanged when using diesel biofuel;

– there is an increase in fuel consumption by an amount exceeding the difference in the calorific value of diesel biofuel and diesel fuel of petroleum origin;

– the decrease in the combustion efficiency of diesel biofuel is largely due to the high kinematic viscosity of this type of fuel when compared to diesel fuel.

### 4.3. Kinematic viscosity of diesel biofuel

To increase the efficiency of using diesel biofuel, it is necessary to reduce its kinematic viscosity, which can be achieved by using its mixtures with similar fuel properties but lower kinematic viscosity. The closest fuel in its properties that can be used to create a mixture is diesel fuel of petroleum origin.

Table 4.4 presents the results of studies of the effect of temperature on the

kinematic viscosity of diesel biofuel based on rapeseed and soy oils, and fig. 4.3 shows the characteristics of changes in the kinematic viscosity of fuel mixtures of diesel biofuel with diesel fuel of petroleum origin.

The effective range of use of diesel biofuel, in which the kinematic viscosity will not significantly affect the operation of the diesel engine for mixtures with diesel fuel and pure diesel biofuel from soy oil, is at a temperature greater than 5°C, and for pure diesel biofuel from rapeseed oil at a temperature greater than 10°C.

Given that the kinematic viscosity decreases with increasing temperature and increases sharply with decreasing temperature, one of the most effective methods for reducing kinematic viscosity is the use of fuel heating.

**Table 4.4. Indicators of changes in the kinematic viscosity of fuel, mm$^2$/sec**

| Fuel type | Temperature, °C | | | | | |
|---|---|---|---|---|---|---|
| | 0 | 3 | 8.5 | 14.0 | 17.5 | 20 |
| Diesel fuel (DF) | 10.22 | 8.43 | 6.13 | 5.27 | 4.85 | 4.5 |
| Diesel biofuel from rape oil (PME) | 17.42 | 13.31 | 10.97 | 8.92 | 8.2 | 7.64 |
| Diesel biofuel from soy oil (CME) | 14.23 | 11.06 | 8.5* | 7.21 | 6.68 | 6.15 |

* – the data is recorded at a temperature of 8.2°C.

Fig. 4.4 presents comparative studies of changes in the density and viscosity indicators of diesel biofuel and diesel fuel of petroleum origin.

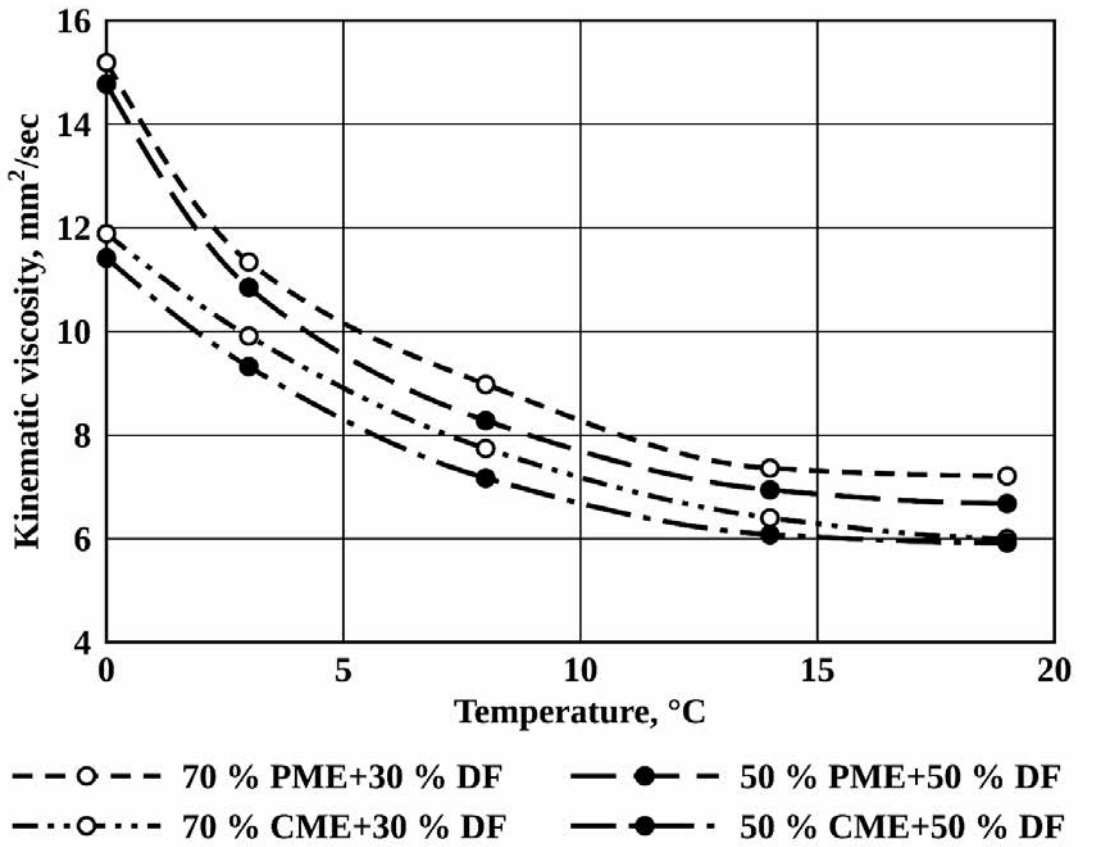


**Fig. 4.3. Dependence of kinematic viscosity of diesel biofuel mixtures with diesel fuel on temperature**

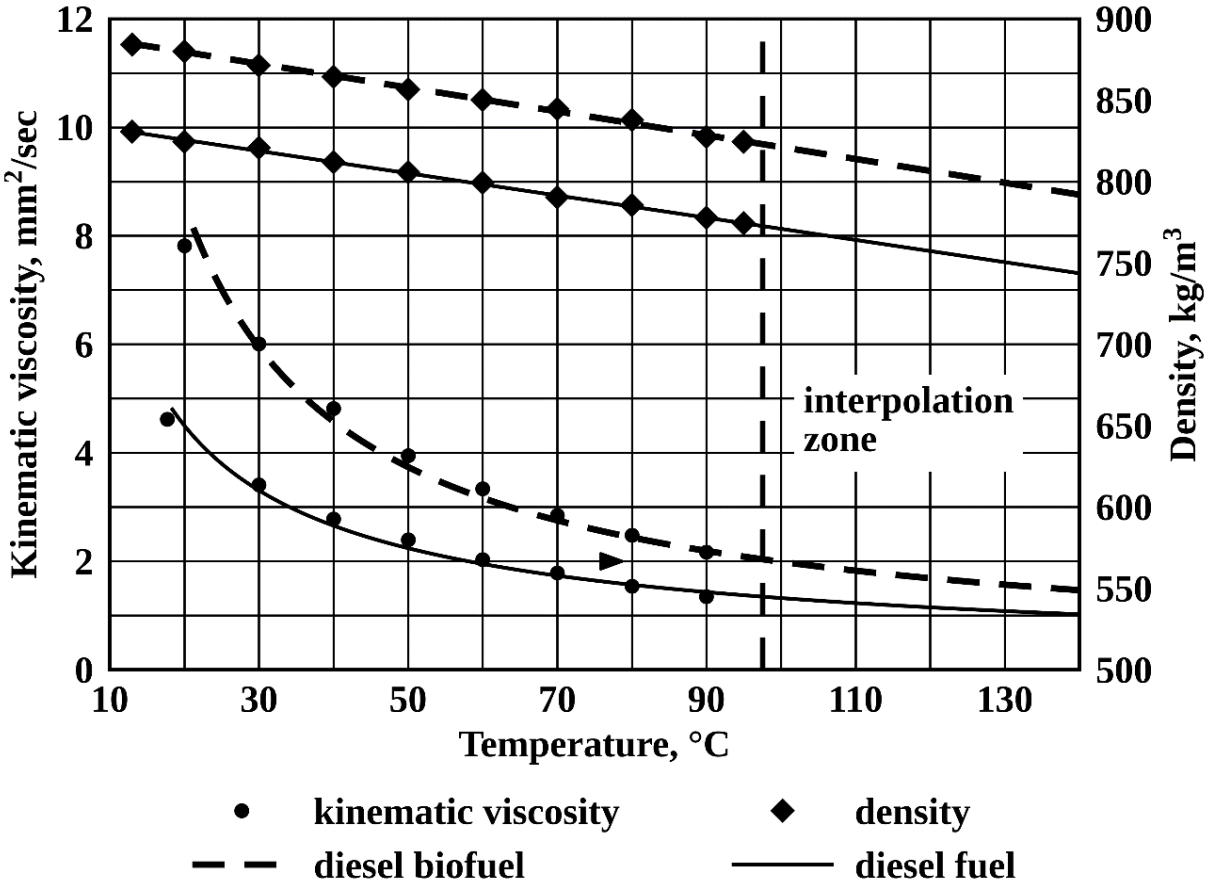


**Fig. 4.4. Dependence of kinematic viscosity and fuel density on temperature**

As the temperature increases, the kinematic viscosity of diesel biofuel decreases more intensively than that of diesel fuel. Thus, in the temperature range from 20°C to 95°C, the kinematic viscosity of diesel biofuel decreases by 4 times, and diesel fuel – by 3 times. The decrease in fuel density with increasing temperature is directly proportional. In the temperature range from 20°C to 95°C, the density of diesel fuel decreases by 5.6%, and diesel biofuel – by 6.2%. Achieving the same kinematic viscosity indicators of diesel biofuel and diesel fuel is possible at a temperature of diesel biofuel higher by 30-40°C.

Considering that the temperature of diesel fuel in the head of a high-pressure fuel pump reaches a temperature of 60°C and the kinematic viscosity of diesel fuel at this temperature is 2 $mm^2$/sec, a similar kinematic viscosity value for diesel biofuel can be achieved at a temperature close to 100 °C. To predict changes in the kinematic viscosity of fuels at temperatures greater than 100°C, an interpolation of the obtained experimental data was performed, which showed that the kinematic viscosity of diesel biofuel gradually decreases with increasing temperature, but the intensity of the viscosity drop significantly decreases.

Thus, the effective range of use of diesel biofuel, in which kinematic viscosity will not significantly affect the operation of a diesel engine, is at temperatures greater than 10°C for pure diesel biofuel and 5°C for its mixtures with diesel fuel. When the temperature increases from 20 to 95°C, the kinematic viscosity of diesel biofuel decreases by almost 4 times, but achieving the same kinematic viscosity indicators with diesel fuel is possible at a temperature of diesel biofuel higher by 30-40°C.

### 4.4. Improving the efficiency of using diesel biofuel

To check the effect of changes in the kinematic viscosity of diesel biofuel on the characteristics of its injection, it was performed a study on the change in the spray angle of the diesel fuel torch and diesel biofuel with a nozzle FSH 62005 (SMD-14 engine) in the air when the fuel temperature changes (fig. 4.5).

Experimental studies have shown that the spray angle of the fuel torch with an increase in fuel temperature from 10 to 100°C increased from 21 to almost 30°C, which is, by 40%, but did not reach the value of the spray angle for diesel fuel at 15°C. It should be noted that the heating temperature of diesel fuel does not significantly affect the change in the spray angle.

Thus, increasing the temperature of diesel biofuel before injection improves the characteristics of the spray torch, which leads to an improvement in the mixing process and complete combustion of diesel biofuel. However, when the heating temperature of diesel biofuel is 100°C, the value of the diesel fuel spray angle is not reached, which indicates that the effective heating range of diesel biofuel is at a slightly higher temperature.

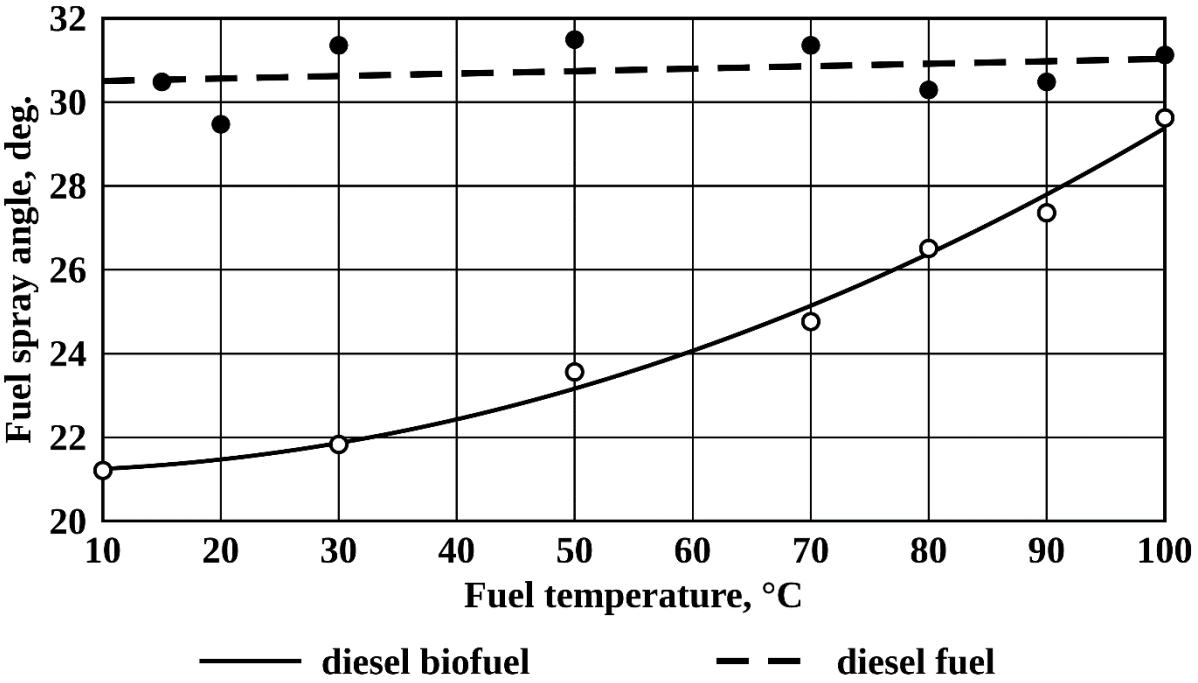


**Fig. 4.5. Changing the spray angle of the torch depending on the fuel temperature**

Taking into account the fact that the heating temperature of diesel biofuel is limited by the operating temperature of the high-pressure fuel pump, a two-stage heating system was developed to increase the efficiency of using diesel biofuel (fig. 4.6).

The proposed system allows expanding the temperature range of diesel biofuel use by preheating it in the fuel tank to a temperature of 35-40°C. At this temperature, the kinematic viscosity of diesel biofuel is less than 5 $mm^2$/sec and is filtered in coarse and fine fuel filters. An increase in the combustion efficiency of diesel biofuel is

achieved by subsequent more intensive heating after a high-pressure fuel pump before injection into the engine cylinders.

When using the proposed system, the diesel engine was started on diesel fuel, which is contained in the main fuel tank 1. On diesel fuel, the engine is heated to operating temperature, while the tank with diesel biofuel 2 is heated using a tubular heat exchanger 3, which is connected to the cooling system of the internal combustion engine. When the required temperature of the diesel engine and diesel biofuel is reached, the engine is switched to diesel biofuel. Then the fuel flows through the fuel lines to the coarse filter 4, fine filter 5 and then enters the high-pressure fuel pump 6. From the high-pressure fuel pump 6 through the high-pressure fuel lines 7, the fuel passes through the heating chamber 8, where it is heated to the required injection temperature due to the heat of the engine exhaust gases. Then the fuel is transmitted to the injectors 9, through which it is sprayed in the cylinders of the internal combustion engine 10. A bypass flap is installed in the exhaust manifold of the internal combustion engine, which allows directing part of the exhaust gases to the heating chamber 8 without throttling the exhaust manifold. The position of the bypass flap determines the amount of gases that pass through the heating chamber 8 and is controlled by the temperature control unit 11, taking into account changes in the speed of the internal combustion engine and the cyclic fuel supply.

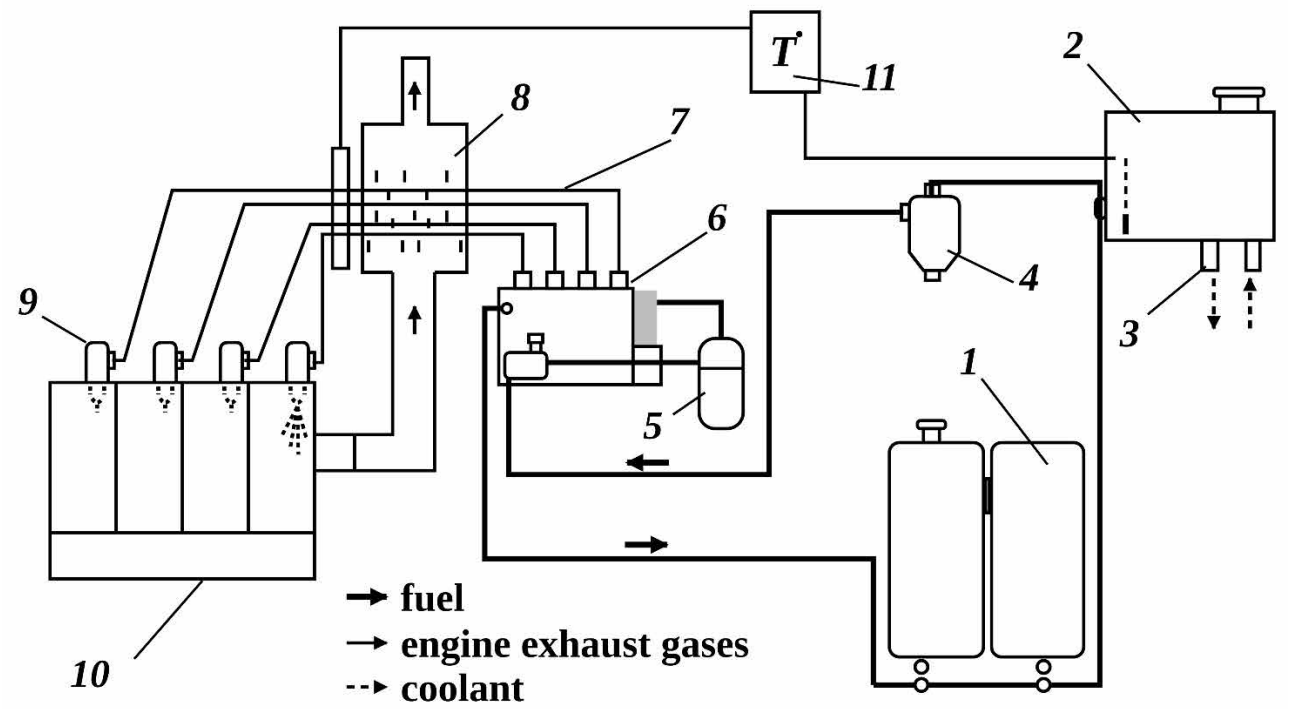


**1 – diesel fuel tank; 2 – diesel biofuel tank; 3 – heat exchanger; 4 – coarse filter; 5 – fine filter; 6 – high pressure fuel pump; 7 – high pressure fuel lines; 8 – heating chamber; 9 – engine injectors; 10 – engine; 11 – temperature control unit**

**Fig. 4.6. Two-stage diesel biofuel heating system**

When implementing the proposed scheme on the Kyi-14102 tractor, it is necessary to make changes in the standard system of low-pressure fuel lines. The return

line connecting the high-pressure fuel pump 6 to the main fuel tank 1 must be connected to the fuel supply line. The diesel biofuel tank 1 is connected to the main fuel supply line. The implementation of such a connection scheme makes it possible to obtain an annular fuel supply circuit. In the future, when closing the fuel taps of the diesel fuel tank and opening the tap of the diesel biofuel tank, the heated diesel biofuel enters the fuel supply line. When the engine is switched back to diesel fuel, the main line is completely filled with diesel fuel. This scheme was implemented on the PMZ-6 AKL and Kyi-14102 tractors (fig. 4.7), and was used for bench and field research.

The two-stage fuel heating system made it possible to determine the optimal temperature range for heating diesel biofuel before injection into the engine cylinders. During bench tests of the D-65N diesel engine operation, the dependences of changes in the specific consumption of diesel biofuel on the heating temperature at different engine loads were obtained (fig. 4.8).

The analysis shows that with an increase in the heating temperature, the specific consumption of diesel biofuel gradually decreases and reaches its minimum value, respectively: 318 g/kWh when the engine is loaded with 37 kW; 329 g/kWh when the engine is loaded with 28 kW, and 386 g/kWh when the engine is loaded with 19 kW in the temperature range from 115 to 120°C. It should be noted that the nature of the change in the dependence of the specific consumption of diesel biofuel on the heating temperature at different engine loads is similar, but the value of the heating temperature of diesel biofuel, at which the minimum fuel consumption is achieved, is in the range from 115 to 120°C.




**Fig. 4.7. The PMZ-6 AKL and Kyi-14102 tractors equipped with a two-stage fuel heating system**

When using heating diesel biofuel in the temperature range from 90 to 120°C, the viscosity of the injected fuel decreases, as a result, the injection characteristics improve (the fuel cutting angle increases, the range of the torch decreases, the diameter of the spray drops decreases), which leads to an improvement in the completeness of fuel combustion and a decrease in its specific consumption. When the fuel is heated above 125°C, there is a further decrease in the viscosity of the fuel, as a result of which

there is an excessive decrease in the diameter of the droplets when spraying fuel, which leads to a decrease in the range of the torch, a decrease in turbulent eddies of the fuel-air mixture in the cylinder, the formation of zones with excessive fuel concentration and insufficient air. In these zones, the rate of fuel combustion and the completeness of its combustion decreases, as a result, the specific fuel consumption increases.

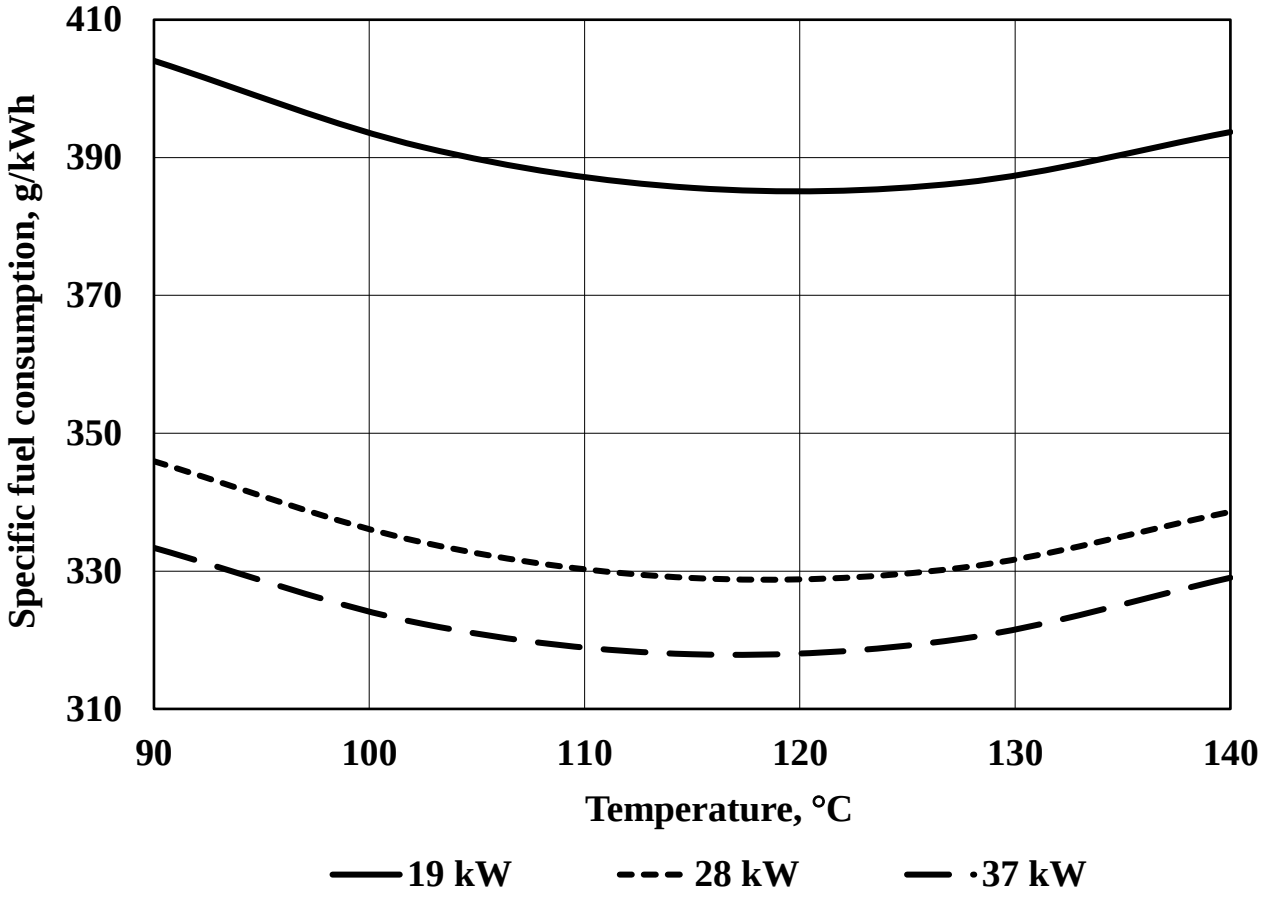


**Fig. 4.8. Dependence of the specific consumption of diesel biofuel on the heating temperature and engine load**

To check the influence of the heating temperature of diesel biofuel, comparative brake tests of the D-65N diesel engine were performed with the determination of technical, operational and environmental performance indicators of the diesel engine.

The obtained values of specific fuel consumption, carbon monoxide (*CO*) emissions, hydrocarbon compounds ($C_nH_m$) and nitrogen oxides ($NO_x$), allow estimating the effect of heating temperature on the combustion process of diesel biofuel in comparison with diesel fuel of petroleum origin.

The analysis of the obtained performance characteristics shows (fig. 4.9), that when running on diesel fuel, the engine developed a power of 46.31 kW with a crankshaft speed of 1,771 rpm and specific fuel consumption of 248 g/kWh, on diesel biofuel without heating – 46.13 kW at a crankshaft speed of 1,764 rpm and specific fuel consumption of 297 g/kWh, on heated diesel biofuel – 45.99 kW at a crankshaft speed of 1,759 rpm and specific fuel consumption of 280 g/kWh, which is by 19.75% and 12.9% more than diesel fuel consumption, respectively. The use of heating diesel

biofuel before injection into the engine cylinders can reduce the overspending of diesel biofuel from 3 to 10%, depending on the engine load.

In diesel engines, *CO* is formed in local areas with a rich mixture and then oxidized to carbon dioxide ($CO_2$) during expansion, since there is always an abundance of oxygen in the cylinder. Analysis of carbon monoxide emissions (fig. 4.10) shows that at a load of 10 kW, the specific *CO* emissions are almost the same and amount to 21.16 g/kWh on diesel fuel, 21.72 g/kWh on diesel biofuel without heating, and 22.92 g/kWh with heating. When the load is increased to 20 kW, the specific emissions for diesel fuel are reduced almost twice and three times for diesel biofuel. In the load range from 20 to 30 kW, specific *CO* emissions for diesel fuel remain almost unchanged and reach their minimum value close to 10 g/kWh. With a further increase in the load, there is a gradual increase in emissions to 13.33 g/kWh at maximum load.

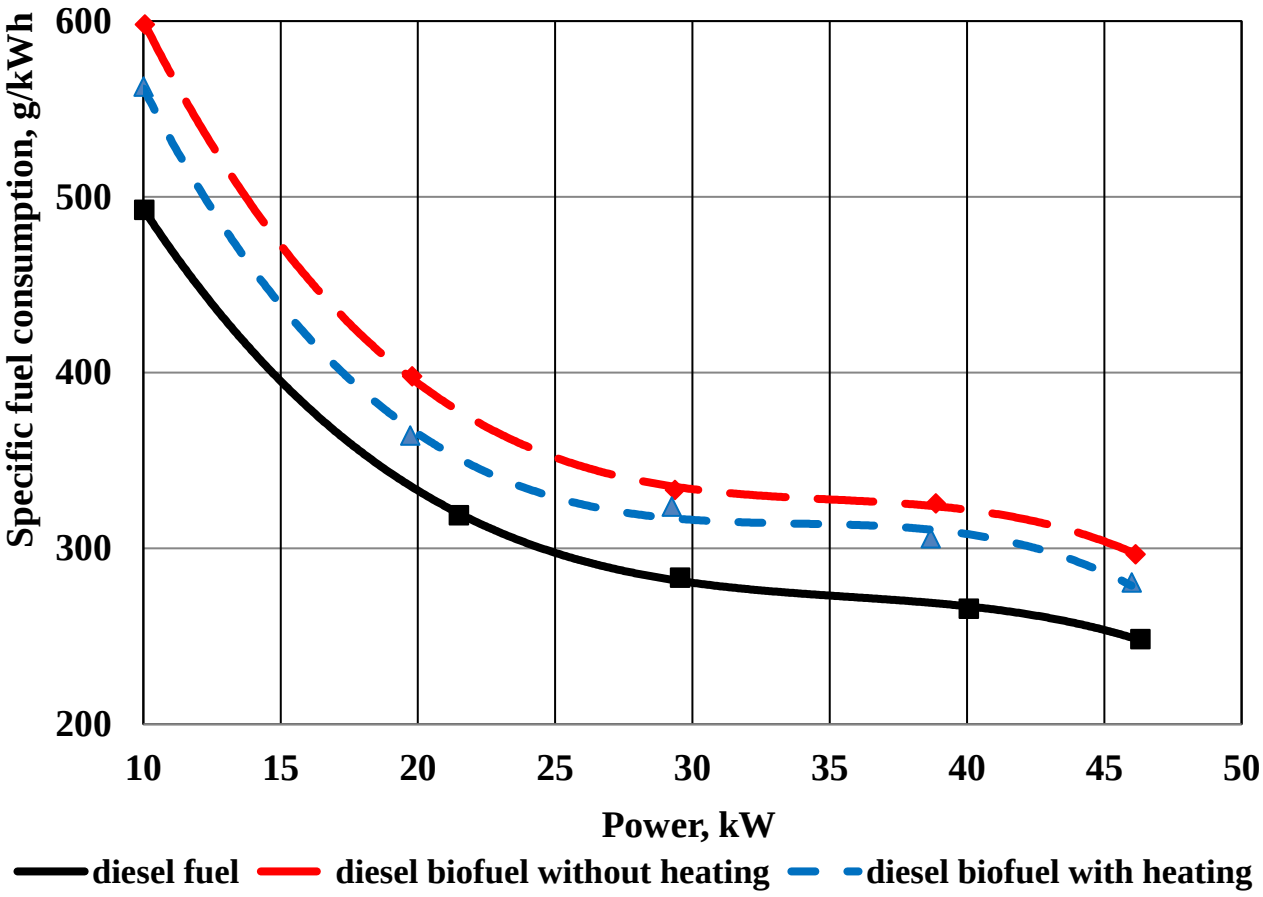


**Fig. 4.9. Change in specific fuel consumption depending on engine load**

As the load increases, specific *CO* emissions from diesel biofuel gradually decrease and reach their minimum without heating of 3.8 g/kWh and 4.72 g/kWh with heating at a load close to 39 kW. At maximum engine load, there is a sharp increase in the values of specific *CO* emissions to 23.17 g/kWh and 15.42 g/kWh when running on diesel biofuel without heating and with heating exceeding the emission values for diesel fuel by 81.3% and 15.6%. The reduction in specific *CO* emissions when using diesel biofuel compared to diesel fuel over almost the entire loading range is explained

by the presence of free oxygen in the structure of the biofuel molecule, which contributes to its more complete oxidation.

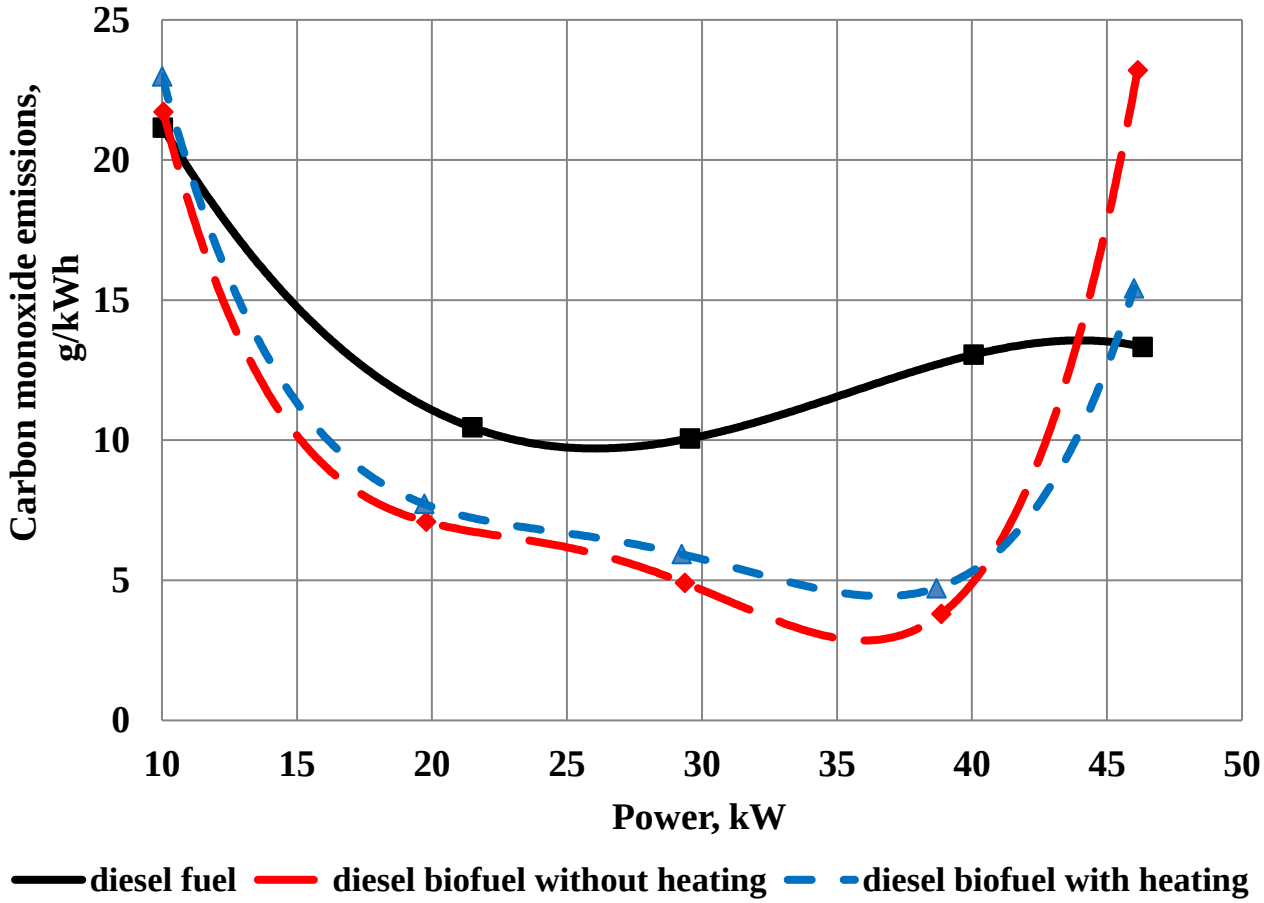


**Fig. 4.10. Change in specific carbon monoxide emissions depending on engine load**

Analysis of the characteristics of changes in specific emissions of hydrocarbon compounds (fig. 4.11) shows that the nature of changes in emission values in the range from 10 to 40 kW is almost the same and does not differ significantly from each other. As the load increases, the specific values of hydrocarbon compound emissions decrease. The specific $C_nH_m$ emission values for diesel biofuel without heating are slightly lower than for diesel fuel. At maximum load, it should be noted a sharp increase in specific emissions of hydrocarbon compounds for diesel biofuel without heating, which are 2 times higher than the values of emissions for diesel fuel.

Analysis of the obtained experimental dependencies (fig. 4.12) shows that the specific values of nitrogen oxides are almost identical, and do not differ significantly from each other. At maximum capacity, the specific $NO_X$ emissions for heated diesel biofuel exceeded the emission values for diesel fuel and non-heated diesel biofuel by 7.7% and 17%.

A sharp increase in the indicators of specific emissions of harmful compounds $CO$ and $C_nH_m$ of a diesel engine at maximum power when running on diesel biofuel without heating compared to the values for diesel fuel is associated with insufficient quality of cutting and mixing (fuel drops when cutting are larger than diesel fuel drops,

due to a higher kinematic viscosity value), which against the background of the maximum cycle fuel supply leads to an increase in the number of zones with insufficient oxygen around fuel droplets, where diesel biofuel molecules, having a larger molecular chain, do not have time to undergo complete destruction and oxidation, and, as a result, there is a deterioration in the completeness of fuel combustion and an increase in harmful emissions of carbon monoxide and hydrocarbons.

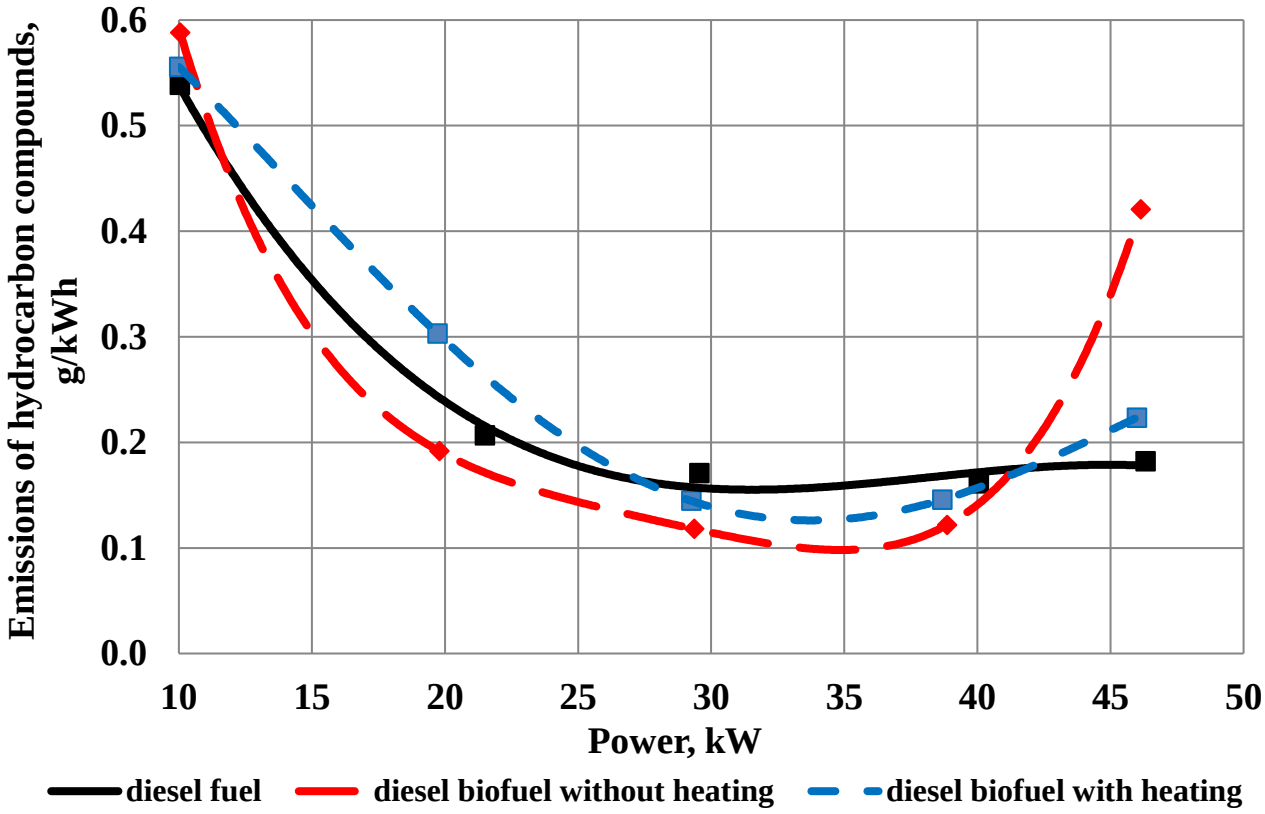


**Fig. 4.11. Change in specific emissions of hydrocarbon compounds depending on engine load**

The specific emissions values for diesel biofuel with heating are slightly higher over almost the entire load range than for diesel biofuel without heating. When diesel biofuel are heated to a temperature of 120°C, spraying and mixing improves, resulting in an increase in the completeness of combustion of the tail part of the fuel, consisting of high-molecular carbohydrates. This leads to an increase in the amount of harmful emissions and a decrease in hourly and specific fuel consumption when heating is applied. This is especially noticeable at the maximum engine load, when the cylinder has unfavorable conditions for complete combustion of fuel. Specific emissions of $CO$ and $C_nH_m$ in this mode for diesel fuel without heating were 50% and 90%, respectively, higher than for diesel biofuel with heating. A higher value of specific nitrogen oxide emissions for heated diesel biofuel is associated with an increase in the temperature of local fuel combustion zones due to an increase in the completeness of its combustion, which in turn contributes to the intensification of $NO_X$ formation.

As a result of research, it was found that the use of heating diesel biofuel to a

temperature of 120°C improves the completeness of fuel combustion, as a result, there is a decrease in the consumption of diesel biofuel, with a slight deterioration in harmful emissions. It should be noted that carbon monoxide emissions are reduced when using diesel biofuel. So, when the engine is loaded in the range from 30 to 40 kW, they are two times less than that of diesel fuel. Emissions of hydrocarbon compounds and nitrogen oxides have similar changes and do not differ significantly from each other. A significant difference from the general nature of changes in harmful emissions is observed at maximum engine load, due to the occurrence of unfavorable conditions for mixing and combustion of fuel, but this mode of operation is not typical for diesel engines when performing technological operations in agricultural production.

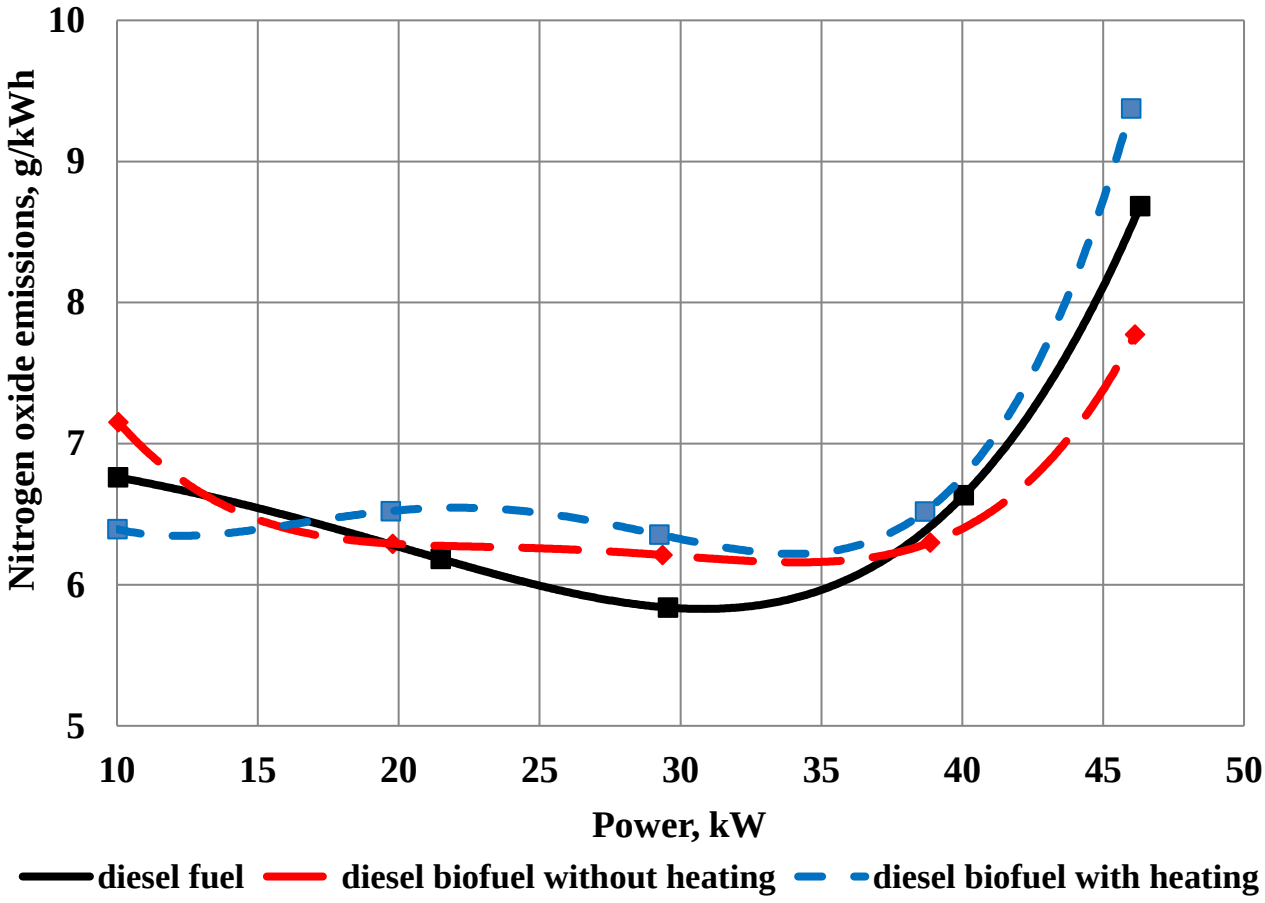


**Fig. 4.12. Change in specific nitrogen oxide emissions depending on engine load**

Thus, the optimal temperature range of heating diesel biofuel before injection into the engine cylinders is in the range from 115 to 120°C. This improves the completeness of fuel combustion and, as a result, there is a decrease in the consumption of diesel biofuel by an amount of 3 to 10%, depending on the load, with a slight deterioration in the specific indicators of harmful emissions.

### 4.5. Production inspection of the MTU operation using a two-stage heating system for diesel biofuel

Production testing of the efficiency of using diesel biofuel and a two-stage fuel heating system during MTU operation was performed on the basis of the PMZ-6 AKL

tractor with the D-65N engine when performing technological operations of pre-sowing cultivation and rolling of crops, as well as on the basis of the Kiyi-14102 tractor when performing technological operations of plowing, disking and sowing.

Analysis of the results of the MTU operation based on the PMZ-6 AKL tractor (table 4.5) showed that during the technological operation of continuous soil cultivation when working on diesel biofuel, an increase in fuel consumption by 17.7% was recorded when compared to fuel consumption on diesel fuel. The use of heating diesel biofuel to the temperature range of 110-125°C made it possible to reduce fuel consumption by 7.5%. When performing the technological operation of rolling crops, the consumption of diesel biofuel increased by 18.2%, and the use of heating diesel biofuel to a temperature of 100-110°C reduced fuel consumption by 4.7%. However, it should be noted that the optimal temperature range for heating diesel biofuel was not achieved during the technological operation of crop rolling.

**Table 4.5. Operating costs of MTU fuel based on the PMZ-6 AKL tractor**

| Operation type | Fuel type | | | Overspending of diesel biofuel, % |
|---|---|---|---|---|
| | Diesel fuel | Diesel biofuel | | |
| | Fuel consumption, kg/ha | Temperature range, °C | Fuel consumption, kg/ha | |
| **Continuous cultivation: PMZ-6 AKL + KPS -4** | **5.2** | **60–65** | **6.12** | **17.69** |
| | | **110–125** | **5.69** | **9.4** |
| **Crops rolling: PMZ-6 AKL + ZKKSH -6** | **1.43** | **40–55** | **1.69** | **18.18** |
| | | **100–110** | **1.61** | **12.58** |

Testing of the Kyi-14102 tractor with D-245 engine (fig. 4.13) was performed during autumn field work at ambient temperatures from minus 1 to plus 6°C, the heating temperature of diesel biofuel was maintained in the range from 115 to 120°C.



**Fig. 4.13. The Kyi-14102 tractor equipped with a two-stage system for diesel biofuel heating during field tests**

Analysis of the obtained results (table 4.6) shows that the overspending of diesel biofuel compared to diesel fuel was 8.58% during plowing, and 9.02% during disking, which is explained by the lower calorific value of diesel biofuel.

**Table 4.6. Operating costs of fuel of the MTU based on the Kyi-14102 tractor using a diesel biofuel heating system**

| Operation type | DBF used, l | Fuel type and consumption, kg/ha | | DBF overspending, % |
|---|---|---|---|---|
| | | DF | DBF | |
| **Plowing: KYI-14102 + PRO-3** | **200** | **15.85** | **17.21** | **8.58** |
| **Disking: Kyi-14102 +BDV-3** | **670** | **5.74** | **6.258** | **9.02** |
| **Seeding: Kyi-14102 + Great Plains-1.5** | **380** | **8.7** | **9.8** | **12.64** |

In most cases, the lower calorific value of diesel biofuel is assumed to be 37.5 MJ/kg, but it can vary significantly, so the lower calorific value of diesel biofuel must be determined separately in each specific case.

To check the adequacy of the obtained results, the lower calorific value of diesel fuel and diesel biofuel was tested by burning samples of fuel that was used during experiments in a calorimetric bomb. Studies have shown that the lower calorific value of diesel biofuel is by 8.25% less than that of diesel fuel, which confirms the adequacy of the data obtained during production tests of the Kyi-14102 tractor.

The conducted production tests of the MTA using a two-stage system for diesel biofuel heating showed that the overspending of diesel biofuel during technological operations is from 8.0% to 13%, while maintaining the performance and capacity of the MTU.

The presented results of the production testing allow asserting the efficiency of using a diesel biofuel heating system.

### 4.6. Organizational aspects of diesel biofuel use

Diesel biofuel behave quite aggressively towards structural materials, so it is advisable to follow the following rules when using them:

– diesel biofuel must meet the requirements of DSTU 6081:2009 "Motor fuel. Esters of methyl fatty acids of oils and fats for diesel engines. Technical specifications";

– diesel biofuel must be used within six months from the manufacture date;

– diesel biofuel storage tanks and fuel tanks should be periodically cleaned of sediment and micro-flora formations;

– to reduce the negative impact of diesel biofuel on engine oil, it is recommended to start operation and heat the engine to operating temperature using diesel fuel;

– it is also necessary to finish the work on diesel fuel in order to ensure the replacement of diesel biofuel in the fuel system for the implementation, in the future,

of the correct start of the engine;

– if diesel biofuel gets on the paintwork, it urgently needs to be changed or wiped dry, and it is also necessary to prevent diesel biofuel from getting on the rubber;

– when running on diesel biofuel, it is recommended to halve the service life of the engine oil and fuel fine filter;

– after every 50 hours of operation, it is necessary to perform the operation of draining sediment from coarse and fine fuel filters;

– do not allow the MTA to operate with fuel residues of less than 5% of the fuel tank volume;

– it is necessary to periodically drain 5% of the remaining fuel every 100 hours of operation in order to control the formation of sediment and micro-flora deposits;

– when the tractor is put into long-term storage or when there is a break in operation for more than a month, diesel biofuel must be drained from the fuel tank.

Analysis of the production experience of using diesel biofuel shows that most of the problems that limit the widespread use of diesel biofuel by agricultural enterprises are related to the need to comply with the requirements for storing diesel biofuel and monitoring its parameters, as well as the need to organize a high level of maintenance of equipment that is refueled with diesel biofuel.

The main problem with storing diesel biofuel is its ability to absorb moisture and dissolve dirt and paint coatings. This worsens the quality of diesel biofuel, therefore:

– fuel samples should be taken regularly to check for compliance with the DSTU 6081:2009 standard;

– it is not recommended to store diesel biofuel for a long time under the direct influence of high or low temperatures;

– fuel must be stored in clean and dry containers without sunlight;

– it is necessary to periodically monitor the water content in the fuel in order to avoid the risk of micro-organisms, peroxide formation and corrosive effects of water, including on fuel equipment elements;

– it is necessary to remove water from storage tanks before filling them with diesel biofuel;

– to minimize condensation of moisture during storage of diesel biofuel, it is necessary to keep the fuel tanks as full as possible, wash and drain them before filling and after emptying;

– when using fuel mixtures of diesel fuel and diesel biofuel they must be settled within 24 hours after mixing.

Before starting operation of a diesel biofuel engine, it is necessary to pay attention to the following maintenance work:

– it is necessary to flush and replace the coarse and fine fuel filters, remove slag deposits in the fuel system and equipment;

– replace rubber and technical products with those that are resistant to diesel biofuel;

– it is necessary to change the engine fuel supply advance angle in accordance with the manufacturer's recommendations when using diesel biofuel;

– it is recommended to store diesel biofuel at temperatures above plus 10°C.

### 4.7. Economic efficiency of using diesel biofuel

In agricultural production, the overall economic efficiency of new technologies and equipment is determined based on determining the amount of profit from their use.

It is well known that profit is defined as the difference between the selling price of a product and its cost price, taking into account depreciation. The cost of production includes components of costs associated with its production, namely the total cost of materials and raw materials, the cost of maintenance and repair of equipment, the cost of energy resources, and wages with accruals. The economic efficiency of using diesel biofuel in the operation of machine and tractor units in comparison with working on diesel fuel should be considered as the difference between the cost of fuel used and operating costs attributed to a unit of a certain amount of work performed. When calculating, we assume that conditional fixed expenses (wages with accruals for social benefits, depreciation charges, repair costs, the cost of services consumed, and other direct expenses) remain unchanged when replacing diesel fuel with diesel biofuel.

The annual economic efficiency of using diesel biofuel in the operation of MTU is:

$$E = C_{DF}(V_{DF} - V_{DF}^{A}) - V_{DBF}\left(C_{DBF} + \frac{1-k_{IRO}}{k_{IRO}R_{MO}}V_{MO}C_{MO}\right), \quad (4.1)$$

where $E$ – economic efficiency of using diesel biofuel in the operation of MTA, UAH; $C_{DF}$ – cost of diesel fuel, UAH/l; $V_{DF}$ – annual use of diesel fuel, l; $V_{DF}^{A}$ – annual volume of additional diesel fuel consumption when running on diesel biofuel, l; $V_{DBF}$ – annual use of diesel biofuel, l; $C_{DBF}$ – cost of diesel biofuel, UAH/l; $k_{IRO}$ – coefficient of reduction of engine oil life when using diesel biofuel, rel. units; $R_{MO}$ – engine oil life in units of used diesel fuel, l; $V_{MO}$ – oil volume in the diesel engine lubrication system, l; $C_{MO}$ – cost of engine oil, UAH/l.

When determining economic efficiency, it is necessary to take into account the increase in the consumption of diesel biofuel when compared to diesel fuel, which when using pure diesel biofuel reaches from 18 to 20%.

For the use of diesel biofuel in the operation of the MTU, the fuel systems of the engines of energy facilities must be upgraded, which will require additional capital investment. The two-stage heating system for the use of diesel biofuel reduces its consumption by 5-6% and expands the temperature range of diesel biofuel use.

Taking into account the abovementioned, the consumption of diesel biofuel can be determined based on the consumption of diesel fuel as follows:

$$V_{DBF} = k_{IN}(V_{DF} - V_{DF}^{A}), \quad (4.2)$$

where $k_{IN}$ – coefficient of increase in diesel biofuel consumption when compared to diesel fuel, rel. units.

Additional operating costs when using diesel biofuel are associated with a reduction in the service life of engine oil, fuel purification filters and additional costs of diesel fuel, which are associated with starting the engine on diesel fuel and with the need to heat the fuel tank of diesel biofuel at low ambient temperatures.

Diesel fuel consumption associated with starting the MTU engine is determined on the basis of the design features of the tractor by the expression:

$$V_{DF}^{En} = k_{St}(V_{FR} + V_{FF} + V_{Tu} + V_{P}), \quad (4.3)$$

where $V_{DF}^{En}$ – diesel fuel consumption for starting the engine, l; $k_{St}$ – depreciation factor, rel. units; $V_{FR}$ – fuel coarse filter volume, l; $V_{FF}$ – fuel fine filter volume, l; $V_{Tu}$ – internal volume of fuel lines, l; $V_P$ – internal volume of the high-pressure fuel pump head, l.

Diesel fuel consumption at ambient temperatures below 10 °C can be determined as follows:

$$V_{DF}^{H} = t_H G_H, \tag{4.4}$$

where $V_{DF}^{H}$ – variable diesel fuel consumption for starting the engine and heating fuel in the fuel tank, l; $t_H$ – diesel engine operating time required to warm up diesel biofuel in the fuel tank, h; $G_H$ – hourly consumption of diesel fuel during engine operation with diesel biofuel heating, l.

The total additional consumption of diesel fuel when the MTU operates on diesel biofuel, based on the annual consumption of diesel fuel, can be determined as follows:

$$V_{DF}^{A} = \frac{V_{DF}}{V_{WF}}[k_W k_{St}(V_{FR} + V_{FF} + V_{Tu} + V_P) + (1 - k_W)t_H G_H], \tag{4.5}$$

where $k_W$ – coefficient of distribution of diesel fuel consumption, according to the maximum temperature of use of diesel biofuel without the use of heating, rel. units; $V_{WF}$ – average variable of fuel consumption in the MTU, l.

**Questions for self-assessment:**

1. What is diesel biofuel?
2. What is the main technical problem of widespread introduction of diesel biofuel?
3. What is the main difference between diesel biofuel and diesel fuel?
4. What are the main advantages of diesel biofuel over diesel fuel?
5. What are the main disadvantages of diesel biofuel that are difficult to eliminate in one way or another during the production process?
6. What are the main differences between diesel fuels produced from different vegetable oils?
7. How does the power and torque that the engine develops change when using diesel biofuel and their mixtures with diesel fuel?
8. How does the specific and hourly fuel consumption change when using diesel biofuel and their mixtures with diesel fuel?
9. What is the effective range of use of diesel biofuel in which kinematic viscosity will not significantly affect the operation of a diesel engine for mixtures of diesel fuel and pure diesel biofuel?
10. How does increasing the temperature of diesel biofuel before injection improve its combustion?
11. Describe the two-stage heating system for diesel biofuel.
12. At what heating temperature of diesel biofuel is its minimum consumption achieved?
13. Describe the dependence of specific fuel consumption on engine load when using diesel fuel, diesel biofuel without and with the use of fuel heating.
14. Describe the dependence of specific carbon monoxide emissions on engine load when using diesel fuel, diesel biofuel without and with the use of fuel heating.

15. Describe the dependence of specific emissions of hydrocarbon compounds on the engine load when using diesel fuel, diesel biofuel without and with the use of fuel heating.

16. Describe the dependence of specific nitrogen oxide emissions on engine load when using diesel fuel, diesel biofuel without and with the use of fuel heating.

17. How does the use of a two-stage diesel biofuel heating system affect the overspending of diesel biofuel when compared to diesel fuel of petroleum origin?

18. What basic rules should be followed when using diesel biofuel?

19. What basic maintenance work should be performed before starting operation of a diesel biofuel engine?

20. How is the economic efficiency of using diesel biofuel achieved in agricultural production?

21. How fuel consumption is determined when a diesel engine is running using a run-in and brake stand?

**References:**


1. Golub G. A., Chuba V. V., Marus O. A. Determination of fuel consumption by machine-tractor unit during field tests. *Scientific Bulletin of the National University of Life and Environmental Sciences of Ukraine. Series: Machinery and energy of agro-industrial complex*. 2015. Iss. 224. P. 303–309.

2. Golub G. A., Chuba V. V. Investigation of diesel biofuel heating before injection into engine cylinders. *Technical and technological aspects of development and testing of new equipment and technologies for agriculture of Ukraine* : collection of scientific works. 2015. Iss. 19 (33). P. 271–275.

3. Golub G. A., Chuba V. V., Zubko V. M. Diesel biofuel heating modes in the fuel tank. *Bulletin of Sumy National Agrarian University. Series "Mechanization and automation of production processes"*. 2014. Iss. 11 (26). P. 70–74.

4. Golub G. A., Chuba V. V. Operational parameters of the engine when using diesel biofuel. *Scientific Bulletin of the National University of Life and Environmental Sciences of Ukraine. Series: Machinery and energy of agro-industrial complex*. 2014. Iss. 196, Part 1. P. 23–31.

5. Golub G. A., Chuba V. V. Modeling of operational performance of MTU on diesel biofuel. *MOTROL. Commission of Motorization and Energetics in Agriculture*. 2014. Vol. 16, No. 3. P. 66–73.

6. Golub G. A., Chuba V. V. Estimation of fuel consumption when using diesel biofuel. *Mechanization and electrification of agriculture* : interdepartmental thematic scientific collection. 2014. Iss. 99, Vol. 2. P. 76–83.

7. Golub G. A., Chuba V. V. Mathematical modeling of operational indicators of the machine-tractor unit on diesel biofuel. *Scientific Bulletin of the National University of Life and Environmental Sciences of Ukraine. Series: Machinery and energy of agro-industrial complex*. 2014. Iss. 194, Part 1. P. 181–187.

8. Golub G. A., Chuba V. V. MTU operational parameters when working on diesel biofuel. *Mechanization, greening and conversion of biological raw materials in animal husbandry*. 2012. Vol. 2 (10). P. 23–32.

9. DSTU 3868-99. Diesel fuel. Specifications. [Valid from 1999-09-01]. Official ed. Kyiv : Derzhstandart of Ukraine, 1999.

10. DSTU 6081:2009. Motor fuel. Esters of methyl fatty acids of oils and fats for diesel engines. Technical requirements.

11. Nadykto V., Didur V., Fedorenko V. Influence of Biodiesel on the Operational Performance of Machine-Tractor Units. *Tekhnika i tekhnolohiyi APK*. 2008. No. 1. P. 27–29.

12. Semenov V. G., Chernenko S. M., Atamas S. M. Determination of lower heat of combustion of biodiesel according to chromatographic data. *Scientific works of Kremenchug State University named after M. Ostrogradsky*. 2010. Vol. 2, Part 1. P. 87–91.

13. Semenov V. G. Analysis of diesel performance on petroleum and alternative fuels of vegetable origin. *Collection of scientific papers of the National Technical University "KhPI"*. 2002. No. 3. P. 177–197.

14. Bondioli P., Folegatti L. Evaluating the Oxidation Stability of Biodiesel. An Experimental Contribution. *Rivista Italiana delle Sostanze Grasse*. 1996. Vol. 73. P. 349–353.

15. Correlating Chemical Structure and Physical Properties of Vegetable Oil Esters / J. de A. Rodriguez Jr., F. de P. Cardoso, E. R. Lachter et al. *Journal of the American Oil Chemists' Society*. 2006. Vol. 83, No. 4. P. 353–357.

16. Dunn R. O. Effects of minor constituents on cold flow properties and performance of biodiesel. *Progress in Energy and Combustion Science*. 2009. Vol. 35. P. 481–489.

17. Golub G. A., Kukharets S. M., Pavlenko M. Yu. Prospects for the use of circulating mixing equipment in the production of diesel biofuels. *Scientific Bulletin of the National University of Life and Environmental Sciences of Ukraine. Series: Machinery and energy of agro-industrial complex*. 2015. Iss. 240. P. 377–382.

18. Golub G. A., Kukharets S. M., Yarosh Y. D., Kukharets V. V. Integrated use of bioenergy conversion technologies in agroecosystems. *INMATEH – Agricultural Engineering*. 2017. Vol. 51, No. 1. P. 93–100.

19. Golub G. A., Kukharets S. M., Chuba V. V., Pavlenko M. Yu., Yarosh Y. D. Rationale for the parameters of equipment for production and use of biodiesel in agricultural production. *Eastern-European Journal of Enterprise Technologies*. 2017. Vol. 2/1 (86). P. 28–33.

20. Golub G. A., Chuba V. V., Kepko O. I. Research on temperature preparation of diesel biofuel in an energy vehicle fuel tank. *INMATEH – Agricultural Engineering*. 2018. Vol. 56, No. 3. P. 101–108.

21. Golub G. A., Chuba V. V., Yarosh Y. D. The study of the biofuel-operated diesel engine with heating. *International Journal of Renewable Energy Research*. 2019. Vol. 9, No. 3. P. 1283–1290.

22. Golub G. A., Chuba V. V., Marus O. A. Modeling of transition processes and fuel consumption by machine-tractor unit using biofuel. *INMATEH – Agricultural Engineering*. 2019. Vol. 58, No. 2. P. 45–56.

# 5. PRODUCTION AND USE OF BIOETHANOL

**Lecture Plan:**


**5.1. General information about bioethanol 97**
**5.2. Raw material base and fundamentals of the bioethanol production process 100**
**5.3. Fundamentals of the biotechnological process of bioethanol production 102**
**5.4. Technological schemes for bioethanol production 105**
**5.5. Production of bioethanol from cellulose-containing materials 106**
**5.6. Technical implementation of bioethanol production 108**
**5.7. Basic properties of bioethanol as a motor fuel 112**
**5.8. Global experience in using bioethanol 114**
**5.9. Prospects for the use of bioethanol in Ukraine 116**
**5.10. Use of bioethanol as fuel for internal combustion engines 117**
**5.11. Investigation of the operation of the MeMz-245 engine on fuel mixtures with bioethanol 121**


## 5.1. General information about bioethanol

Global production of bioethanol as an alternative fuel for transport has increased from 17 billion liters in 2000 to 85 billion liters in 2012. According to optimistic forecasts, the expected volume of bioethanol production in the world in 2020 will amount to 281.5 billion liters with an average annual growth rate of market volume for the period from 2016 to 2020 of 12.5%. According to the pessimistic forecast, the expected volume of bioethanol consumption in 2020 will be 187.5 billion liters with an average annual growth rate of the bioethanol market in 2016-2020 – 10%. In both scenarios in 2020, global trade in bioethanol will account for up to 10% of global liquid fuel production. The leaders, as before, will remain the United States and Brazil, whose total share in global production by 2020 will be from 55 to 65%.

The spatial structure of the bioethanol atom (chemical formula $C_2H_5OH$) is shown in fig. 5.1

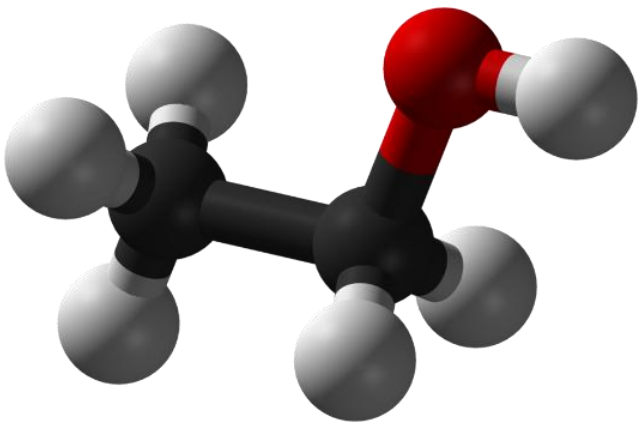

**Fig. 5.1. Spatial structure of the bioethanol atom (white color – hydrogen, red color – oxygen, black color – carbon)**

Ukraine consumes 4.5 million tons of gasoline per year. Own production of raw materials – oil and gas condensate – provides only 20% of this amount, the rest of gasoline is produced from imported oil or is imported from neighboring countries.

The country's gasoline dependence can be significantly reduced through the production and use of bioethanol. Investors' interest in this type of activity appeared only after gasoline at gas stations overcame the price level of 1.25-1.35 US dollars per liter in 2011. The cost of ethanol-containing additives is 0.7-0.8 US dollars per liter. When mixed with gasoline, they produce quite decent gasoline of the A-95 type, with a low content of sulfur and aromatic hydrocarbons. In fig. 5.2 examples of the use of commercial bioethanol are given.




**Fig. 5.2. Filling the car with E85 bioethanol and the type of denatured ethanol bottle**

Bioethanol is a term that appeared about 15 years ago to refer to ethyl alcohol obtained by biochemical processing of plant raw materials. Ethyl alcohol (ethanol) can also be obtained purely chemically from ethylene, but this ethanol will no longer be "eco-friendly", since it is produced from non-renewable hydrocarbon raw materials. The burning of such ethanol leads to an increase in the concentration of carbon dioxide in the atmosphere, as well as the burning of natural gas and refined petroleum products. When burning bioethanol, carbon dioxide released into the atmosphere is considered not to cause global warming, since plants from the atmosphere recently absorbed it during photosynthesis. The term "bioethanol" has spread at a time when there is general concern about the effects of anthropogenic climate change on the planet.

Thus, bioethanol is anhydrous high-octane ethyl alcohol (the octane number is 105) obtained in the process of processing plant reducing raw materials, by fermentation of sugars by microorganisms, which is used as motor fuel (contains at

least 99% ethyl alcohol). It is also used for the manufacture of mixed motor fuel or additives to motor fuel.

Based on the results of static developments of alcohol industry enterprises and scientists, the physic-chemical parameters of bioethanol are normalized to the indicators given in table 5.1.

**Table 5.1. Quality indicators of bioethanol**

| **Indicator name** | **Indicator rate** | |
|---|---|---|
| | **Brand A** | **Brand B** |
| **Look and color** | **Clear colorless liquid or light-yellow color** | |
| **Density at temperature (20±0.1)$^0$C, kg/m$^3$** | from 787 to 792 | |
| **Temperatures at 760 mmHg:**<br>**boiling point**<br>**melting**<br>**flash** | <br>78<br>-35<br>112 | |
| **Volume fraction of water, %, max** | 0.2 | |
| **Mass concentration of dry residue, mg/dm$^3$, max** | 100 | |
| **Volume fraction of ethyl alcohol, %, not less** | 97.8 | 98.3 |
| **Volume fraction of methanol, %, max** | 1 | |
| **Volume fraction of gasoline (hydrocarbons), %** | from 1 to 1.5 | |

Bioethanol can be used in modern internal combustion engines (without changing their design) up to 15% mixed with gasoline, thereby increasing the octane number of the latter, or directly as fuel. Bioethanol, unlike oil, is a form of use of renewable energy sources that can be obtained from agricultural raw materials. In addition to bioethanol, a valuable feed additive – distillery refuse – is also obtained in the technological process of production.

Bioethanol is an explosive substance, because alcohol vapors mixed with air in a concentration of 2.8 to 13.7% by air volume have the ability to explode from a source of fire or spark, and concentrated aqueous solutions easily ignite and burn without the formation of soot. Bioethanol is hygroscopic; it absorbs moisture from the air. Vapors are toxic to humans, animals, and microorganisms, and their maximum allowable concentration in the air is 1 mg/l.

Unlike food alcohol, from which alcoholic beverages are made, fuel ethanol is produced by reduced distillation (two distillation columns instead of five), so it contains methanol and fusel oils and undergoes a denaturation process with gasoline, making it unsuitable for consumption.

Interest in bioethanol as a fuel arose much earlier than humanity noticed the danger of global warming. It was caused by a shortage of petroleum fuel in some countries and the availability of significant resources for the production of bioethanol. We are talking primarily about Brazil, whose government has begun to encourage the use of bioethanol as a fuel component for internal combustion engines with spark ignition. Then the United States, Canada, and European countries began to join the

process of partial replacement of petroleum automobile fuel with bioethanol. Today, the production of bioethanol has significantly spread and has become one of the most important areas of development of the global economy. The increase in bioethanol production led to the expansion of crops of renewable raw materials – sugar cane, corn, and other cereals. Production of multi-fuel engines with spark ignition, adapted to the consumption of fuels with a bioethanol content of up to 95%, has begun.

## 5.2. Raw material base and fundamentals of the bioethanol production process

In the conditions of Ukraine, raw materials for the production of bioethanol can be agricultural crops that contain sugar (sugar beet, sugar sorghum, Jerusalem artichoke) or starch (corn, rye, wheat, potatoes), as well as other types of plants or their residues (stems, grass, remnants of the agricultural and woodworking industry).

**Potatoes** most fully meet the technological requirements of alcohol production, as they quickly boil and form a homogeneous wort containing the necessary amount of nitrogenous substances for yeast nutrition. Potato starch provides the highest alcohol yield.

**Cereals** suitable for alcohol production are barley, rye, wheat, oats, millet, corn, and it is also possible to get ethyl alcohol from sorghum, buckwheat, peas, vetch, lentils, etc. The chemical composition of grain from various agricultural crops is given in table 5.2.

**Table 5.2. Average chemical composition of the main grain crops (in % per dry matter)**

| Crop | Starch | Sugar | Cellulose | Hemicelluloses and pectin substances | Proteins | Fats | Mineral substances |
|---|---|---|---|---|---|---|---|
| **Corn** | **70** | **3** | **2.1** | **7** | **10** | **4.6** | **1.3** |
| **Barley** | **55** | **4** | **6** | **11** | **12** | **2** | **3.5** |
| **Oats** | **45** | **2** | **14** | **13** | **12** | **5.5** | **3.8** |
| **Millet** | **58** | **3.8** | **11** | **2** | **12** | **4.6** | **4** |
| **Wheat** | **60** | **4.3** | **2.8** | **8** | **16** | **1.9** | **2.2** |
| **Rye** | **65** | **5** | **2.2** | **10** | **13** | **1.7** | **2** |

Among grain crops, the best raw material for the production of alcohol is corn, because it contains relatively more starch, less fiber, more fat (which increases the feed value of distillery refuse) in addition, the yield of corn is 2-3 times higher than the yield of other cereals.

**Molasses**, which is a waste product of sugar production formed after the crystallization of sugar, looks like a thick liquid of dark brown color.

**Cellulose** is a component of wood processing waste, substandard wood, as well as corncobs, sunflower husks, cotton husks, etc. That is, those materials that contain a significant amount of polysaccharides, primarily cellulose.

Table 5.3 shows the approximate specific yield of bioethanol from bio-raw

materials, and fig. 5.3 – average bioethanol yield per hectare.

**Table 5.3. Estimated crop yield and possible bioethanol yield**

| Culture (bio-raw materials) | Yield, c/ha | Bioethanol yield, l/t |
|---|---|---|
| **Sugar beet** | 300…600 | 50…100 |
| **Jerusalem artichoke** | 300…400 | 82…87 |
| **Chicory** | 250…350 | 50…92 |
| **Potatoes** | 130..320 | 93…117 |
| **Corn (grain)** | 60…75 | 210…416 |
| **Wheat** | 45…60 | 185…395 |
| **Barley** | 45…60 | 180…370 |
| **Rye** | 25…40 | 170…340 |
| **Molasses** | – | 270…300 |
| **Wood** | – | 160…200 |

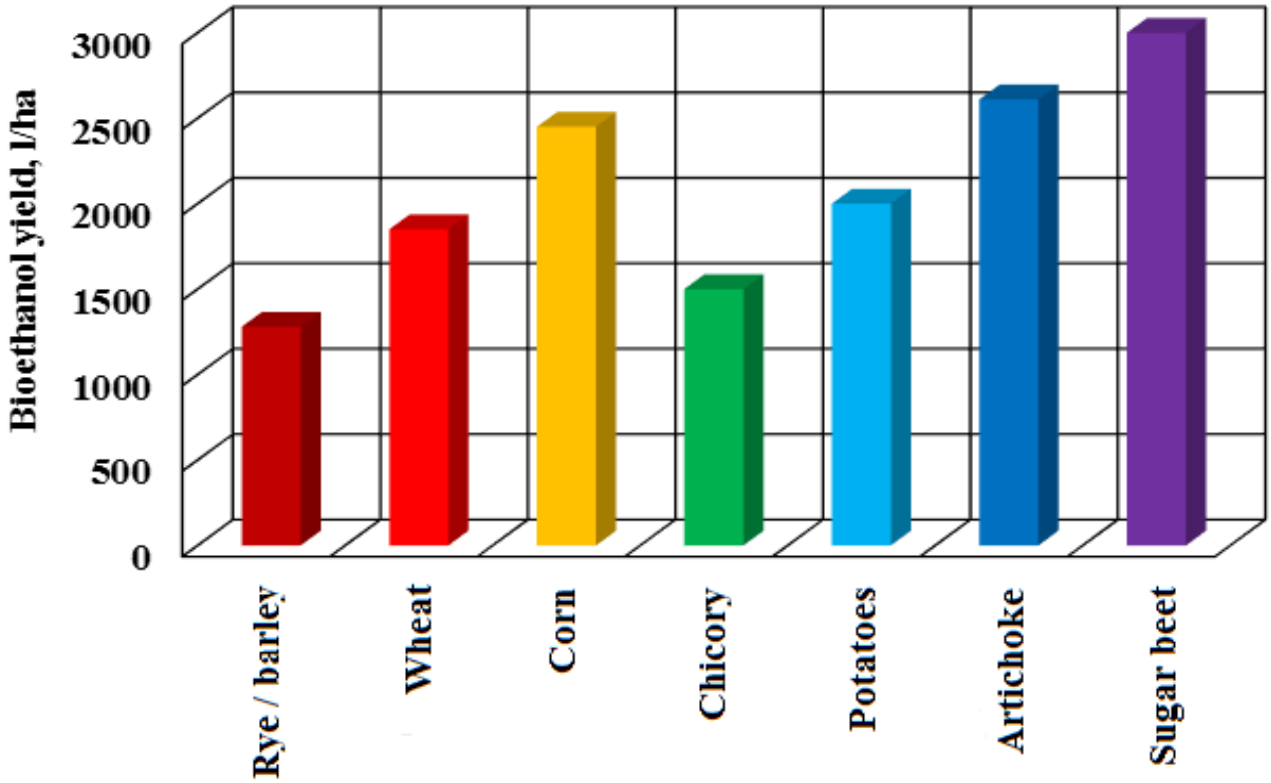


**Fig. 5.3. Average yield of bioethanol from various types of agricultural crops [source: uk.wikipedia.org]**

In the production of bioethanol, it is first necessary to evenly grind the raw materials of the following stages of the technological process – suspension and saccharification, as a result of which starch polysaccharides are hydrolyzed into monosaccharides suitable for fermentation by yeast according to the expression:

$$(C_6H_{10}O_5)_n + nH_2O \rightarrow nC_6H_{12}O_6 \qquad (5.1)$$

The conversion of raw materials into bioethanol is carried out with the help of yeast, which is a single-celled microorganism of the ascomycete class (marsupial

fungi). Yeast belongs to the facultative anaerobes. This means that they perform their vital functions both in the presence of air oxygen (an aerobic process) and in the absence of it (an anaerobic process). In the absence of air, they use oxygen, which is contained in organic substances, to perform their vital functions. Anaerobic fermentation is called fermentation. This produces ethyl alcohol and carbon dioxide:

$$C_6H_{12}O_6 = 2C_2H_5OH + 2CO_2 + 234 \text{ kJ} \quad (5.2)$$

The optimal fermentation intensity is 35°C. Most yeast develops well in the pH range of 3.7-3.3 the development of yeast is significantly affected by the concentration of sugar. Its optimal content in the yeast medium is from 13 to 20%. Alcohol has a depressing effect on yeast; the maximum concentration of alcohol in an alcohol mash is 11-12%. As the alcohol concentration in the mash increases, the fermentation intensity decreases.

### 5.3. Fundamentals of the biotechnological process of bioethanol production

The technological scheme for the production of alcohol from starch-containing raw materials provides for the following technological operations on the example of grain crops.

**Acceptance of raw materials.** Grain should be healthy, with high starchiness, humidity from 14 to 17%, depending on the crop and have a slight contamination. When receiving, pay attention to the grain density, which should be in the range: corn 680-820, rye 680-750, wheat 730-840, barley 580-700, oats 400-450, millet 680-780 g/dm$^3$.

**Cleaning of raw materials.** All types of grain that enter production are cleaned of dust, earth, stones, metal objects, etc. impurities that differ from the grain of this crop in thickness or width and aerodynamic properties are separated on an air-screen separator. In the refined grain, the impurity content should not exceed 1%. Small ferromagnetic impurities that are contained in the grain after purification in air-screen separators are separated using magnetic separators.

**Grain grinding.** For high-temperature cooking of grain at temperatures from 120 to 160°C, the grinding passage through a sieve with holes with a diameter of 1 mm should be 100%. And for low-temperature cooking at temperatures from 85 to 95°C, the grinding should be ultra-thin, that is, the passage through a sieve with holes with a diameter of 0.25 mm should be 100%.

**Preparation of the batch**. To obtain a batch, grain grinding is mixed with water in a ratio of 2.5-3 dm$^3$ per 1 kg of grinding. The greatest amount of soluble carbohydrates accumulates in mixes prepared at a temperature of 60-65°C to reduce water consumption and improve the physical and chemical composition of the batch in recent years, up to 50% of water has been replaced with distillery refuse filtrate. In addition, up to 30% of the diluting thermostable enzyme preparation is added to the batch to reduce its density.

**Thermofermentative treatment of batches.** The main goal is to prepare for saccharification of starch. Saccharification is most active and complete when the starch is unprotected by cell walls, pasted and dissolved. This is achieved by cooking – heat treatment of raw materials at increased pressure and temperatures from 85 to 170°C.

Then the batch is fed to thermoenzyme processing devices, in which it is processed for 90-120 minutes, gradually flowing from one to the other. In this case, the batch is constantly mixed to contact the enzyme.

**Saccharification (hydrolysis) of the boiled mass.** Saccharification consists of cooling the boiled mass to a temperature of 57 to 60°C, mixing the boiled mass with enzyme preparations, directly saccharifying the starch and cooling the wort to the initial fermentation temperature. As a result of saccharification of the boiled mass, a semi-product is obtained – wort of alcohol production.

**Cultivation of yeast.** Yeast of alcohol production is a fermented wort for yeast, the mass fraction of dry substances in which is reduced to half or a third of the initial and with a yeast concentration of 180 to 200 million cells in 1 $cm^3$.

**Fermentation of wort.** In fermentation apparatuses, wort sugar is fermented with yeast into alcohol. Fermented wort is called mash, and fermented wort is called mature mash. In the periodic fermentation method, production yeast is introduced into the fermentation apparatus, which is then gradually filled with wort. The amount of yeast produced is from 8 to 10% of the wort volume. The normal fermentation time is 72 hours, and thanks to the use of modern methods of preliminary preparation of wort, it can be reduced to 60 hours. The fermentation temperature depends on the strain of yeast used and can be maintained in the range from 28 to 35°C. Fermentation is considered complete when the content of unfrozen sugars in the mash reaches 0.2-0.3 g/100 $cm^3$.

**Isolation of alcohol (distillation) and its rectification.** For distillation and rectification of alcohol, a mature mash is supplied, which consists of water (82-90 mass %), dry substances (4-10% mass %) and ethyl alcohol with concomitant volatile impurities (6-10% mass or 9-14 vol. %). Mash also contains 1-1.5 g/$dm^3$ of carbon dioxide, its acidity is 0.5°, and pH is 4.5-5.2.

Distillation is the separation of a mixture of volatile substances with different boiling points into separate components or fractions by partial evaporation and subsequent condensation of steam. Rectification – repeated distillation of liquid and steam in the oncoming stream. As a result of heat and mass transfer between components on contact devices (plates), the steam rising up the distillation column is enriched with alcohol, and the liquid falling down is depleted. By rectification (repeated evaporation and condensation) at atmospheric pressure, a maximum ethanol concentration of 97.2 vol. % can be achieved. This completes the process of obtaining bioethanol.

The simplest way to obtain alcohol from mature distillery refuse is to distill it using a distiller (fig. 5.4).

The distiller consists of an evaporative tank 1 and a cooling condenser 4, which are connected to each other by an inclined pipe. The container is filled with mature mash 2, which is heated by a heater 3. Cooling water constantly flows through the cooling condenser (shown by arrows). For the convenience of working with the distiller, a thermometer 7 can be installed in the vertical part of the pipe, which registers the temperature of steam sent for condensation. The resulting distillate 6 drains into the receiving container 5.

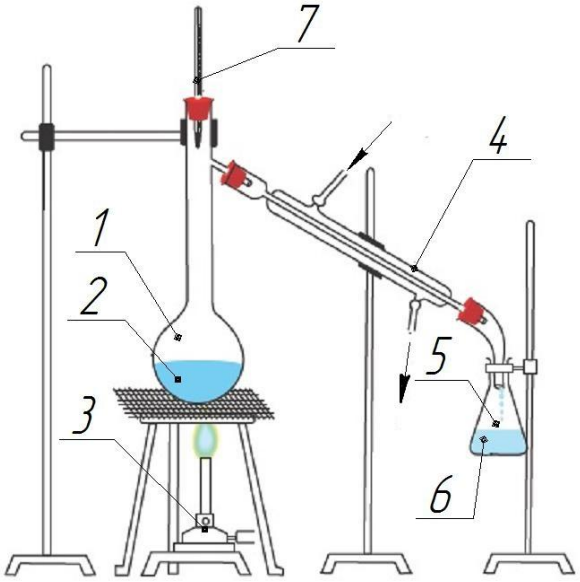


**Fig. 5.4. The simplest distiller (explanation is in the text)**

A simplified industrial scheme for bioethanol production is shown in fig. 5.5.

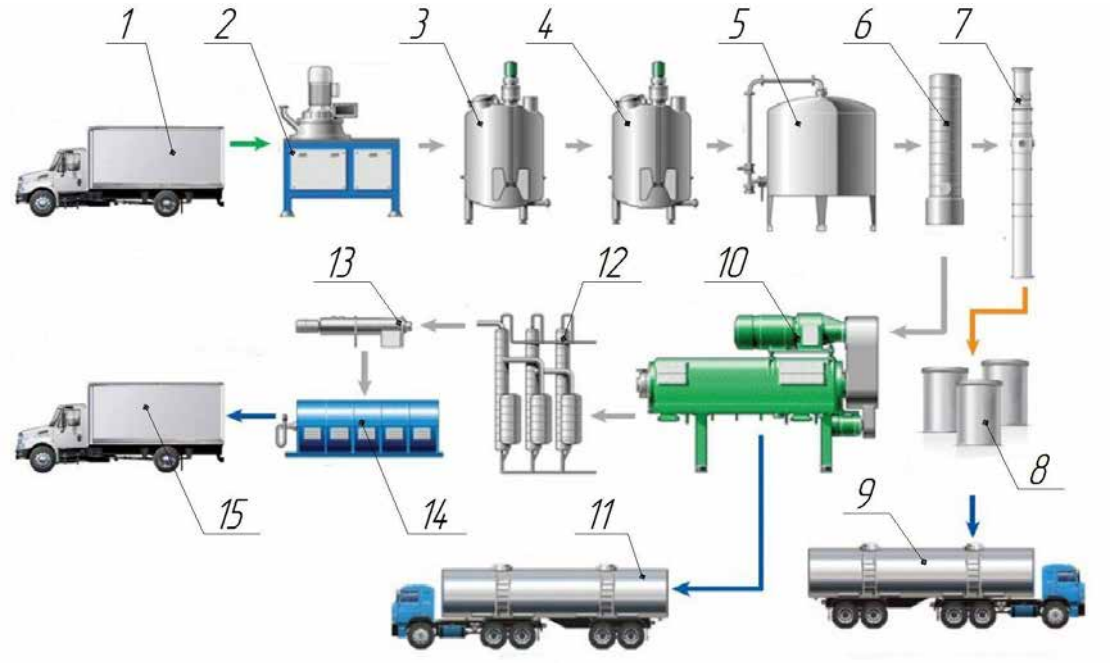


**1 – raw material supply, 2 – grinding, 3 – batch preparation, 4 – saccharification, 5 – fermentation, 6 – distillation, 7 – rectification, 8 – bioethanol storage, 9 – bioethanol transportation, 10 – distillery refuse separation, 11 – liquid distillery refuse transportation, 12 – moisture evaporation, 13 – homogenization, 14 – distillery refuse drying, 15 – dry distillery refuse transportation**

**Fig. 5.5. Simplified scheme of bioethanol production**

**Dehydration and denaturation.** Compared to potable alcohol, the technological process of obtaining bioethanol does not require high purification from concomitant impurities, but is supplemented by stages of dehydration (alcohol with a

strength of 96%, passes a system of molecular sieves, where it gets rid of the residual amount of water and becomes absolute ethanol) and denaturation (adding gasoline to bioethanol in an amount of 2 to 5%, which makes it unsuitable for food consumption.

### 5.4. Technological schemes for bioethanol production

One of the variants of the technological scheme for the production of bioethanol is presented in fig. 5.6. Bioethanol production technologies depend on the selected raw materials. However, all of them usually include the following steps:

1 – preparation of raw materials;
2 – sugar extraction or hydrolysis (saccharification) of raw materials;
3 – fermentation of saccharified mass;
4 – distillation of distillery refuse;
5 –purification (rectification) of alcohol.

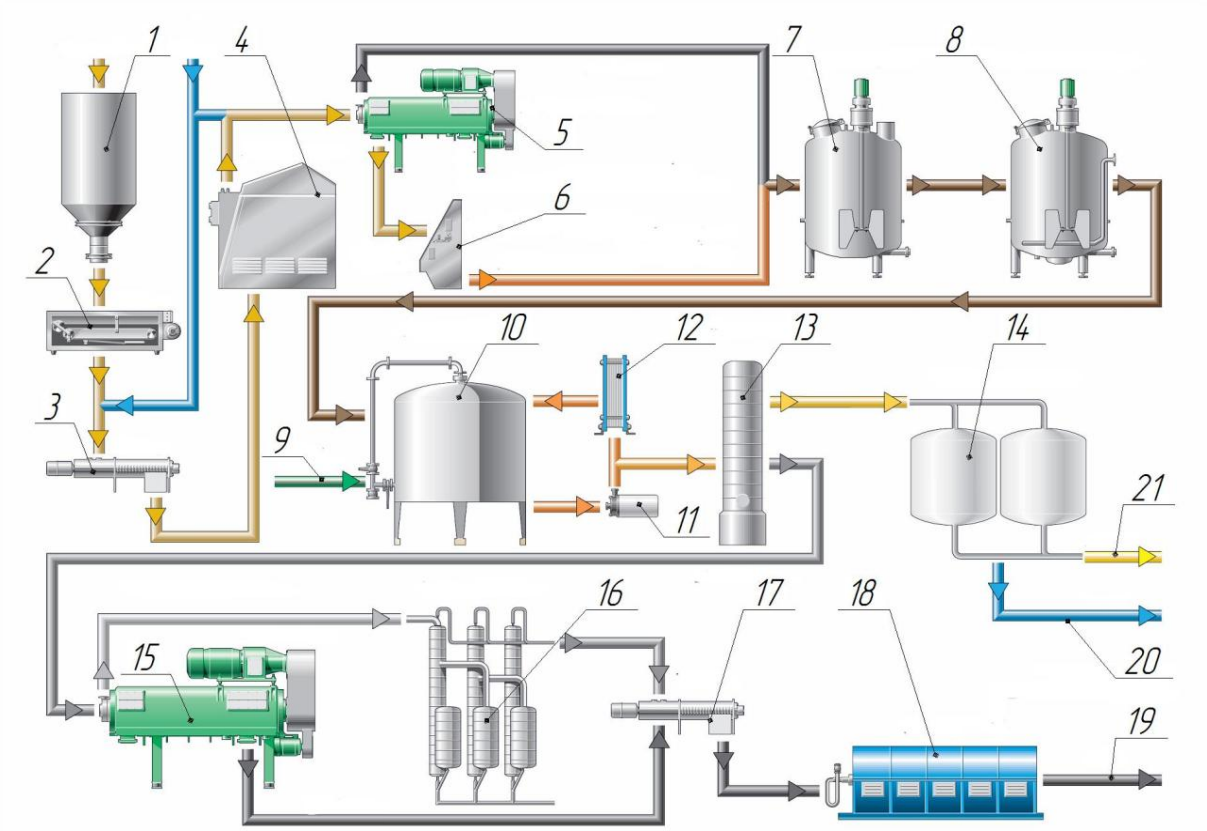


**1 – reservoir for raw materials, 2 – dispenser, 3 – mixer, 4 – agglomerator, 5 – separator, 6 – gluten washer, 7 – suspension tank, 8 – saccharification tank, 9 – yeast, mineral salts, 10 – fermentation tank, 11 – pump, 12 – plate heat exchanger, 13 – distillation column, 14 – molecular sieve, 15 – separator, 16 – evaporator, 17 – mixer, 18 – dryer, 19 – feed yeast, 20 – water, 21 – bioethanol**
**Fig. 5.6. Technological scheme of alcohol production from grain and potato raw materials [source: http://hiller-us.com/ethanol.php]**

First, the raw material is evenly crushed, which speeds up processing. The next stage of the technological process is suspending and saccharification. Suspension and

saccharification is the transformation of starch polysaccharide into monosaccharides suitable for fermentation by yeast. In the suspension process, a suspension is obtained by adding water. Then the suspension is heated by steam in a special boiling device, where the starch is liquefied under the action of alpha-amylase enzymes. Under the action of amylolytic enzymes, starch turns into a solution of oligosaccharides. This hydrolyzed starch undergoes further processing – saccharification, during which it turns into glucose suitable for fermentation.

The next stage is fermentation. At this stage, part of the candied wort is fed to the yeast generator. The rest of the saccharified wort from the saccharifier is mixed with activated yeast biomass in a fermentation machine. The fermentation process lasts from 48 to 60 hours, and mixing ensures optimal contact of yeast with sugars, and regulating the temperature and nutrient content maintains the required fermentation rate. During fermentation, the wort sugars are fermented to ethanol and carbon dioxide. The so-called culture liquid obtained as a result of fermentation contains up to 10% ethanol.

Alcoholic yeast used for processing starch-containing raw materials should have high fermentation activity, quickly and completely ferment sugars, as well as use other components of the nutrient medium in anaerobic conditions, be resistant to reaction products, and resist the development of harmful microflora well.

Further, in the processes of distillation and rectification, bioethanol is isolated and purified. Distillation begins with a brew column. In it, a mixture of ethanol and water is distilled from the fermentation product (culture liquid). Further purification takes place in the distillation column, where the alcohol is released as much as possible from the water.

The last stage in the production of bioethanol is the process of its dehydration. Ethyl alcohol, unlike methyl alcohol, forms an azeotrope with water. In the azeotropic state, the concentrations of alcohol in the vapor and the liquid from which this vapor is formed coincide. For ethyl alcohol and water, this corresponds to 97.2 vol. % at atmospheric pressure.

Dehydration by adsorption on molecular sieves is of the greatest industrial importance. The low cost of molecular sieves, ease of maintenance and low energy costs can significantly simplify the process of alcohol dehydration.

The final product (bioethanol) is sent for storage and then to consumers. At the distillation stage, the main waste of bioethanol production is formed – post-alcohol distillery refuse, which is first sent for decanturation, where it is divided into liquid and solid fractions. The liquid separated fraction is sent to the evaporation unit to remove excess moisture and obtain a concentrated syrup. Post-alcohol distillery refuse is processed to produce feed yeast or biogas.

### 5.5. Production of bioethanol from cellulose-containing materials

Cellulose-containing (or, as they are often called, lignocellulose) substrates are now the most common renewable organic compounds. Every year, about 20-25 tons of cellulose are formed per inhabitant of the planet.

For countries with temperate climate and large woodlands, wood is a cheap raw

material for large-capacity bioethanol production.

Wood can be used as a raw material if the structural bonds of lignin with cellulose are destroyed and the latter is hydrolyzed, that is, some chemical or biochemical pretreatment is required. This somewhat hinders the widespread use of wood for the production of alcohols.

Wood is a product of biological, namely plant origin. Like any biological organism, Wood is made up of cells. Cell walls are approximately 99% made up of organic compounds. Mineral substances usually make up no more than 1%.

Since fiber provides glucose during hydrolysis, and glucose, as it is known, can be converted to ethanol, alcohol can be obtained by chemical processing of cellulose-containing materials. According to one of the methods, the production of ethyl alcohol from cellulose-containing materials is carried out as follows: in a hydrolysis device with sulfuric acid, wood waste, such as sawdust and wood chips, is heated. Fiber is hydrolyzed to glucose. The sulfuric acid is then neutralized with a lime solution to form a precipitate ($CaSO_4$), which is then separated. The resulting glucose solution is fermented in vats in with adding yeast. After fermentation, the solution is separated from the yeast and alcohol is driven out of it in distillation columns; the yeast is sent back to the fermentation vat. At the final stage, alcohol goes through the stages of dehydration and denaturation.

The technology of producing alcohol by fermentation of wood hydrolysates is quite energy-intensive (at the hydrolysis stage) and requires the use of rust-resistant equipment (the main obstacle to its widespread use in practice). Cost-effectiveness and efficiency of production can only be achieved with large volumes of products.

Enzymatic hydrolysis carried out by complexes of cellulases and hemicellulases, which are produced by some fungi and bacteria, opens up great prospects for using cellulose as a raw material for obtaining a wide variety of products. Such hydrolysis takes place at temperatures from 40 to 60°C and pH from 4 to 7, does not require large energy costs and rust-resistant equipment.

Recently, the enzymatic method (fig. 5.7) is becoming popular. Here, hydrolysis occurs under the action of enzymes (for example, *Trichoderma viride*). Pretreatment includes removal of the lignin shell by special treatment using cadoxene solvent (a solution with 5-7% cadmium oxide and 28% ethylenediamine) and treatment with high-pressure liquid ammonia, which destroys the fibers in cellulose, facilitating the penetration of enzymes. In this way, it is possible to achieve almost one hundred percent processing of cellulose.

To expand the possibilities of using wood for bioethanol production, various technologies for lignocellulose degradation are being intensively developed: mechanical (grinding), physical (gamma radiation), physico-chemical (steam explosion, or steam cracking), chemical (hydrolysis), biological (enzymatic hydrolysis) and various combinations of these methods. The most promising ones include the combination of steam cracking with enzymatic hydrolysis, when raw materials are treated with steam at high temperature and high pressure. In this case, the crystal structures explode and lignin is separated from cellulose, followed by hydrolysis of fiber by cellulolytic enzymes.

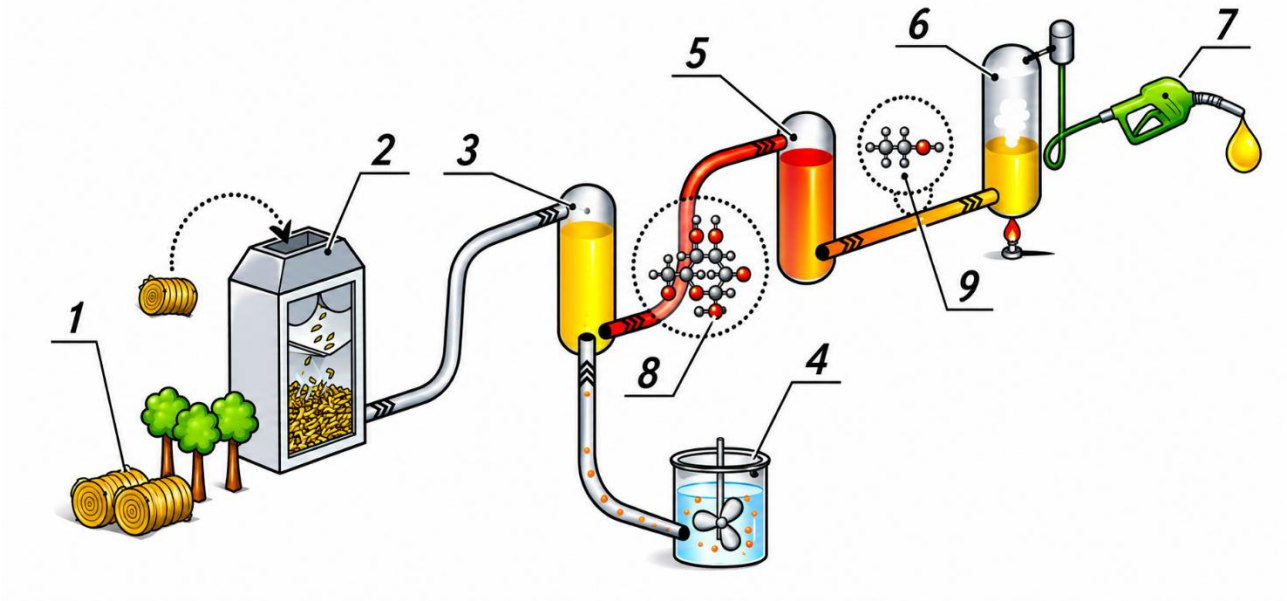


**1 – cellulose-containing raw materials, 2 – pretreatment, 3 – hydrolysis under the action of enzymes, 4 – preparation of enzymes, 5 – fermentation, 6 – distillation, 7 – use of bioethanol, 8 – structure of the glucose molecule, 9 – structure of the bioethanol molecule**

**Fig. 5.7. Simplified scheme of the enzymatic method of bioethanol production [source: http://www.ifpenergiesnouvelles.com/Research-themes/New-energies/Producing-fuels-from-biomass/Biocatalysts-one-of-IFPEN-s-expertise-field-Questions-to-Frederic-Monot-Head-of-the-Biotechnology-Department-at-IFPEN]**

Technologies for producing bioethanol from seaweed are also being introduced into production. In such processes, modified bacteria directly convert brown algae to ethanol by converting the polysaccharide alginic acid (alginate), which is found in large quantities in algae.

### 5.6. Technical implementation of bioethanol production

From comparing the energy equivalents of the typical needs of the agroecosystem in gasoline and bioethanol produced for the needs of the agroecosystem, we will get the ratio of the area under wheat, barley and corn, with their equal value, necessary for the production of bioethanol for the needs of the agroecosystem to the total area of crop rotation:

$$\frac{S_{CBE}}{S_{CR}} = \frac{\alpha_G \gamma_G}{(Y_W k_{WS} k_{BEW} + Y_B k_{BS} k_{BEB} + Y_C k_{CS} k_{BEC}) \gamma_{BE}}, \quad (5.3)$$

where: $S_{CBE}$ – the area under wheat, barley and corn at the same value required to produce bioethanol for the needs of the agroecosystem, ha; $S_{CR}$ – total area of crop rotation, ha; $\alpha_G$ – typical agroecosystem demand for gasoline, kg/ha; $\gamma_G$ – calorific value of gasoline, MJ/kg; $Y_W$, $Y_B$, $Y_C$ – wheat, barley and corn yields, kg/ha; $k_{WS}$, $k_{BS}$, $k_{CS}$, – the coefficients of wheat, barley and corn output, rel. un.; $k_{BEW}$, $k_{BEB}$, $k_{BEC}$ – the coefficients of the output of bioethanol from wheat, barley and corn, rel. un.; $\gamma_{BE}$ – calorific value of bioethanol, MJ/kg.

If the production of bioethanol is carried out only based on wheat, barley, or corn, the ratio of the area under these crops for the production of bioethanol for the needs of the agroecosystem to the total area of crop rotation will be:

$$\frac{S_W}{S_{CR}} = \frac{\alpha_G \gamma_G}{Y_W k_{WS} k_{BEW} \gamma_{BE}}; \frac{S_B}{S_{CR}} = \frac{\alpha_G \gamma_G}{Y_B k_{BS} k_{BEB} \gamma_{BE}}; \frac{S_C}{S_{CR}} = \frac{\alpha_G \gamma_G}{Y_C k_{CS} k_{BEC} \gamma_{BE}}, \quad (5.4)$$

where: $S_W$, $S_B$, $S_C$ – the area under wheat, barley and corn required for the production of bioethanol for the needs of the agroecosystem, ha

The graphic dependence of the ratio of the area under wheat, barley and corn at the same value required to produce bioethanol for the needs of the agroecosystem to the total area of crop rotation from the typical needs of the agroecosystem in gasoline is shown in fig. 5.8 for clarity.

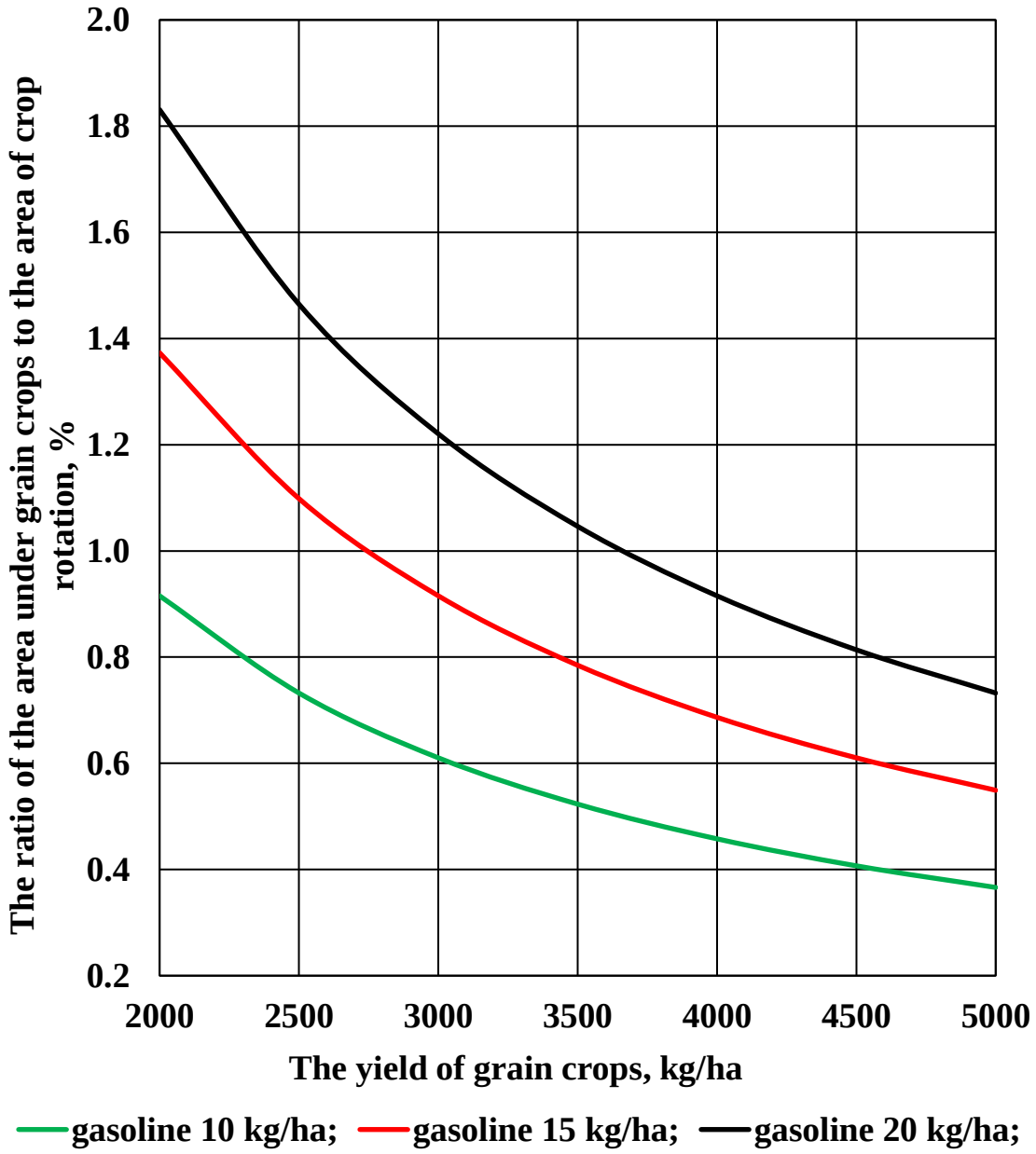


**Fig. 5.8. Dependence of the ratio of the area under wheat, barley and corn at their equal value, necessary for the production of bioethanol for the needs of the agroecosystem to the total area of crop rotation on the typical needs of the agroecosystem for gasoline and the yield of grain crops**

Thus, with the average typical demand of the agroecosystem for gasoline from 15 to 16 kg/ha, the ratio of the area under wheat, barley and corn at the same value required to produce bioethanol for the needs of the agroecosystem to the total area of crop rotation with a grain yield of 3000 to 4000 kg/ha is from 0.7 to 0.9%. This means that to cover the needs of the agroecosystem in bioethanol, no more than 1% of the crop rotation area under grain crops is needed.

Technical support for bioethanol production is similar to that for ethanol production (fig. 5.9). One of the main elements of the production line is distillation or distillation columns. The principle of operation of such columns is the same, only distillation columns are used to separate bioethanol, and distillation columns are used to purify it.

Distillation (rectification) column (fig. 5.10) – a technological device designed for separating liquid mixtures, the components of which have different boiling points. The classic column is a vertical cylinder with contact devices inside. Vapors of distilled liquids are fed into the distillation column. The vapors rise to the top of the column, cool, condense in the refrigerator, and are fed back to the top plate of the column. Flowing down the plates, the liquid is enriched with heavy-boiling components, and the vapors, the higher they rise in the column, the more enriched they are with light-boiling components. Thus, a product enriched with low – boiling components – distillate (bioethanol) – is removed from the upper part of the column.



**Fig. 5.9. Bioethanol production plant**

If the substance consists of two components, the final products are distillate coming out of the upper part of the column and cubic residue (a less volatile component in liquid form coming out of the lower part of the column).

According to the principle of operation, rectification plants are divided into periodic and continuous. In continuous installations, the collective raw mixture enters

the column and the separation products are removed from it continuously. In periodical installations, the mixture that is separated is loaded into a cube and rectification is carried out until products of a given final composition are obtained.



**Fig. 5.10. General view of the distillation column and multi-column distiller**

Industrial distillation columns can reach 60 meters in height and 6 meters in diameter. In distillation columns, plates and nozzles are used as contact devices. The nozzles that fill the column can be made of metal, ceramics, glass, and other materials. Condensation occurs on the surface of these elements.

An important element of bioethanol production is its dehydration to avoid delamination when mixed with gasoline. For dewatering, it is possible to use molecular sieves (adsorbents) – this is the most modern low-energy dewatering technology. In this technology, a superheated mixture of ethanol and water vapors passes through a layer of zeolite, that is, a porous material with a very precisely maintained pore size. Ethanol molecules are slightly larger than the pore size and are trapped in the pores by electrostatic forces. At the same time, smaller water molecules pass through the molecular sieves without being trapped. As a result, anhydrous bioethanol is formed. Diffusion evaporation is another dehumidification method that uses hydrophilic membranes. A vacuum is created on one side of the membrane. Due to the divergence of the diffusion resistance and partial pressure of ethanol and water, these substances are separated on the membrane. Water passes through it, but the dehydrated ethanol remains. Azeotropic distillation is also used for dewatering. In azeotropic installations, a separating agent is added to the mixture of alcohol and water, forming an azeotrope with ethanol or water. Then, in the regeneration column, this azeotrope is separated into a separating agent and a component of the initial mixture.

Thus, the technical support of bioethanol production is constantly being improved in the direction of increasing productivity, reducing energy consumption and improving the quality of the resulting products.

### 5.7. Basic properties of bioethanol as a motor fuel

Bioethanol is one of the renewable energy sources for internal combustion engines with spark ignition.

The main physical and chemical parameters of bioethanol as a motor fuel are given in table 5.4.

**Table 5.4. Key indicators of bioethanol used as motor fuel compared to gasoline**

| Indicators | Units of measurement | Fuel type | |
|---|---|---|---|
| | | petrol | bioethanol |
| **Density at 20°C** | $kg/m^3$ | 740 | 810 |
| **Lower calorific value** | MJ/kg | 43.3-44 | 25-26.8 |
| | MJ/l | 32.5 | 20.25 |
| **Caloric content of the stoichiometric mixture** | $kJ/m^3$ | 3439-3910 | 3850 |
| **Heat of vaporization** | kJ/kg | 330 | 850 |
| **Boiling point** | °C | 30-205 | 78 |
| **Flash point** | °C | 230-260 | 404 |
| **Stoichiometric air requirement during combustion** | kg of air/kg of fuel | 14.9 | 9 |
| **Octane number:**<br>**– using the motor method**<br>**– using the research method** | <br>–<br>– | <br>82-84<br>92-100 | <br>94<br>108 |
| **Cetane number** | - | 3-14 | 8 |
| **Flame temperature in the air** | °C | 2062-2197 | 1962 |

Analysis of physical and chemical properties makes it possible to state that due to the lower calorific value of bioethanol, when used in its pure form compared to gasoline, fuel consumption increases by about 70%. The higher heat of vaporization indicates that compared to gasoline, when the same amount of fuel evaporates, it is necessary to supply more than twice the heat for evaporation, so it is quite difficult to start the engine at ambient temperatures less than 10°C, when using pure bioethanol. The lower calorific value and the amount of air required for combustion indicate the need for major changes in the settings of the fuel and air supply system when using bioethanol in its pure form. In this case, the fuel supply must be increased, and since the heat of vaporization is much higher than that of gasoline, it is necessary to change the value of the ignition angle. The high octane number of bioethanol allows you to increase the compression ratio in the cylinders by an amount from 12 to 14 rel. units and increase the engine power without changing its volume. The high octane number allows using bioethanol to prepare a mixture of cheap low-octane gasoline and, just as importantly, get rid of the use of toxic anti-detonators, such as tetraethyl lead, benzene, toluene, side-chain hydrocarbons, methyltretbutyl ether, manganese compounds, etc.

Based on the properties of bioethanol it is possible to formulate its main

advantages when used as a motor fuel:

- zero $CO_2$ balance;
- a wide raw material base for its production;
- low production cost compared to gasoline;
- it is non-toxic and water-soluble, so it does not cause contamination of the soil and ground water;
- does not contain sulfur;
- no detonation;
- bioethanol vapors dissipate faster than gasoline vapors and are less flammable due to higher auto-ignition temperatures;
- vehicles with FFV (Flexible-Fuel Vehicles) engines running on E100 – azeotrope of ethanol (96% alcohol and 4% water) have been developed and successfully used.

Advantages of bioethanol when used as an additive to gasoline:

- increases the detonation resistance of gasoline (every 3% of bioethanol that is added increases the octane number of gasoline by an amount of 1 to 1.5 units);
- when gasoline is spilled, the bioethanol present in it decomposes naturally faster than other components, without harming the environment;
- the presence of oxygen in the bioethanol molecule contributes to more complete combustion;
- in the presence of 10% bioethanol content in gasoline, aerosol particle exhaust is reduced by up to 50%, carbon monoxide emissions – by 30%, and emissions of volatile organic compounds – by more than 25%;
- nitrogen oxide emissions are reduced;
- the operation of a conventional automobile internal combustion engine on a mixed fuel with 10% bioethanol does not require changing the engine design;
- to date, a number of bioethanol fuel mixtures have been developed for internal combustion engines: E5, E7, E10; E85, E95 (the letter "E" from the Ethanol in English).

The disadvantages of using bioethanol include:

- lower calorific value of bioethanol, which leads to higher fuel consumption;
- increasing the saturated steam pressure of fuel increases the likelihood of steam jams in the fuel system;
- increased aldehyde emissions and evaporation of hydrocarbon compounds (on average, aldehyde emissions when running on alcohols are approximately 2-4 times higher than when running on gasoline);
- the use of fuel mixtures with a bioethanol content of more than 10% requires significant changes to the engine design;
- low phase stability of a mixture of gasoline and bioethanol (delamination during storage is not excluded);
- it has a negative impact on rubber products and metal materials in the fuel supply system;
- it is necessary to organize an autonomous system for pumping and storing

alcohol-containing gasoline, which would completely exclude the contact of fuel with water.

### 5.8. Global experience in using bioethanol

The suitability of bioethanol as an energy carrier, including as fuel for carburetor internal combustion engines, was established immediately after the appearance of the first cars. In 1979, the UN Commission proposed the widespread use of bioethanol as a fuel, as a way to reduce dependence on oil. The percentage of bioethanol content in motor fuel is indicated by the letter "E", for example, E85 is a mixture of 85% bioethanol and 15% gasoline.

In 1980, about 9.2 million tons of bioethanol were produced in the United States and there were created more than 1,000 gas stations with the so-called "gas flue" – a mixture of bioethanol and gasoline (fig. 5.11). In addition to the United States, bioethanol as a fuel is widely used in Brazil, Hungary, Austria, Germany, Italy, Poland, the Czech Republic, Slovakia and other countries.




**Fig. 5.11. Fuel dispenser in East Lansing, Michigan for the sale of mixed fuel grades E10, E15, E30 and E85**

In Brazil, the production of bioethanol from sugar - and starch-containing raw materials for use as fuel for cars is developed by India, which meets its own oil needs mainly through its imports. India has a surplus of sugar cane, grain, and potatoes, which facilitates the production of bioethanol. In 1990, France reduced fuel production from oil by half compared to the 80s due to the use of bioethanol. Adding 10% bioethanol to gasoline saved 1 1.5 million tons of oil. Cuba used a mixture of 20% bioethanol and gasoline as fuel for cars after World War II.

According to world experts, there are 575 bioethanol plants in the world with a total capacity of 80.6 million tons. Thanks to the addition of bioethanol to gasoline, oil savings in 2010 amounted to 50.7 million tons.

Brazil and the United States are at the forefront, producing 87% of the world's bioethanol together. In 2010, Brazil produced 26.2 billion l, which accounted for 30.1% of all bioethanol consumed in the world during this year. The Brazilian government has provided three important initial tools for bioethanol production: guaranteed purchases by the state-owned oil company Petrobras, low-interest loans for agro-industrial firms that produce bioethanol, and fixed prices for gasoline and bioethanol, at which bioethanol is sold for 59% of the cost of gasoline. For uninterrupted sales of bioethanol in 1979, the government planned to produce 350 thousand cars running exclusively on bioethanol by 1981. Since the late 1980s, the number of cars using pure bioethanol has reached more than 4 million, accounting for one-third of the total vehicle fleet in the country, bioethanol production and sales of bioethanol-only vehicles declined. Gasoline prices fell sharply due to the low price of oil. There was also a shortage of bioethanol in the domestic market, which left thousands of cars without fuel in mid-1989. The Brazilian government was forced to start importing bioethanol in 1991.

Confidence in bioethanol-powered vehicles has been restored with the introduction of "flexible-fuel engine" (FFV) vehicles on the Brazilian market, which are capable of using fuel with any bioethanol content.

In 2014, cars with multi-fuel engines were produced by such companies as Chevrolet, Fiat, Ford, Peugeot, Renault, Volkswagen, Honda, Mitsubishi, Toyota, Citroen, Nissan, Kia Motors, Volvo, etc.

Cars with flexible-fuel engines accounted for 22% of car sales in Brazil in 2004, reaching 10 million in March 2009. Currently, there is not a single passenger car in Brazil that uses pure gasoline.

In the United States, fuel ethanol is mainly used as an oxygen-containing additive to gasoline and as a mixture with gasoline up to 10%, and in smaller amounts as E85 fuel for vehicles with multi-fuel engines. The US government has been stimulating bioethanol production for the past 38 years. From 1978 to 2004, the Federal Government introduced a tax credit for bioethanol mixed with gasoline for payers of the federal excise duty on motor fuels. From 2005 to 2008, it was 51 cents per gallon of bioethanol mixed with gasoline, which was just over 5% per gallon of E10. From 2009 until today, the tax credit has been reduced to 45 cents per gallon of bioethanol. However, second-generation bioethanol produced from cellulose received a tax credit of 1.01 per gallon. The administration of the Department of Environmental Protection has determined that second-generation biofuels are considered to be any renewable fuel

produced from renewable biomass, the life cycle of which, compared to conventional fuels, is lower by at least 60%. Thus, traditional bioethanol produced from corn grains may not receive a tax credit, but cellulose bioethanol produced from corn stalks and cobs (without seeds) may be subject to this benefit. Producers claim that due to the increase in the production of bioethanol from corn and the growing demand for it, the price increases, so farmers get higher profits, and the government of the country saves money by reducing the cost of providing subsidies to farmers under federal programs.

In the European Union, by 2005, according to the established standards, 2% of bioethanol was added to gasoline, by 2010 it was already 5%, and by 2020 this figure is planned to increase to 10%. But at the same time, in accordance with the established standards, all regions of the European Union should be guaranteed the availability of infrastructure that would ensure refueling and supply of gasoline without bioethanol for unadapted vehicles.

### 5.9. Prospects for the use of bioethanol in Ukraine

Production of bioethanol in Ukraine as a high-octane oxygen-containing additive to gasoline was started in 1999. The annual total capacity of distilleries in Ukraine is 4.6 million tons, the need for domestic consumption of ethyl alcohol is 1.8 million tons, and exports – 0.6 million tons, the capacity utilization rate is about 40%. In 2013, Ukrainian distilleries produced approximately 50 thousand tons of bioethanol.

In recent years, the production of bioethanol and additives based on it has been carried out at the state enterprise "Naumovsky alcohol plant", the state enterprise "Gaisinsky alcohol plant", the state enterprise "Luzhansky experimental plant" and the Khorostkovsky MPD of the state enterprise "Ukrspirt".

The legislation provides for a number of tax, credit and other benefits for the production and use of bioethanol, which came into effect on January 1, 2010, namely exemption from income tax for 10 years, exemption from duties on the import of equipment until 2019, etc.

At the same time, many distilleries operate with incomplete loading or are generally idle. In the future, the capacity of these enterprises can be used for the production of bioethanol from ligninocellulose. In Ukraine, it is also possible to simultaneously produce sugar and bioethanol in sugar factories. The production of two important products will help regulate sugar and bioethanol production based on demand and prices.

With the addition of 5% bioethanol to gasoline consumed by Ukrainian motor transport, the bioethanol market demand will be more than 250 thousand tons per year. It is also possible to get a quota for the supply of bioethanol to the EU countries in the amount of 100 thousand tons of biofuels per year.

In Ukraine, tractors capable of running on bioethanol are being developed. An example of this is a multi-fuel tractor, the development of which was carried out by the Joint Laboratory "Traktor", which included representatives of the ESC "IMESG", Kharkiv tractor plant and PLC "ZAZ". The model of the KHTZ-2511g tractor (fig. 5.12). Instead of the standard diesel engine, it was equipped with a MeMZ-307m deforced gasoline engine – from 70 to 35 hp. The presented tractor is multi-fuel, can

run on gasoline, propane-butane and bioethanol.



**Fig. 5.12. KHTZ - 2511G flexible-fuel tractor**

To achieve optimal fuel and economic performance of the engine when using bioethanol, it is necessary that the vehicle is equipped with a FFV engine. In other words, the car's computer should be able to determine the bioethanol content in the fuel mixture and automatically adjust the parameters of fuel injection and operating cycles.

### 5.10. Use of bioethanol as fuel for internal combustion engines

Adding 10% bioethanol to gasoline reduces aerosol particle emissions by 50% and carbon monoxide emissions by 30%. In 2014, the share of bioethanol in global motor fuel consumption was 6%. Bioethanol transport is most widely used in the United States and Brazil. Ethanol is a less "energy-intensive" source of energy than classical fuel (this applies only to mixtures with a high bioethanol content); the mileage of vehicles running on E85 fuel per unit volume of fuel is approximately 75% of the mileage on gasoline. Conventional internal combustion engines cannot run on E85 without structural changes, so they can use E10 fuel (a mixture of 10% bioethanol and 90% gasoline). In order for a car or other vehicle to be refueled with fuel containing more than 10% bioethanol, an engine upgrade is necessary. The computer that controls fuel injection into the engine must determine the alcohol concentration and select the appropriate operating modes. Since alcohol contains water, the fuel line also requires modernization. In addition, if the vehicle is operated in cold conditions, it is necessary to warm up the fuel before starting. Only special bioethanol engines or "Flex-Fuel" or FFV class engines can run on pure ethanol, i.e. flexible-fuel engines that can also run

on conventional fuel.

Flexible-fuel engines (FFV) that can run on bioethanol became commercially available in the late 1990s.

In the United States, two-fuel vehicles are also referred to as "E85 vehicles." In Brazil, FFVs are commonly known as" total flex "or simply "flex" cars. In Europe, FFVs are also known as "Flex-fuel" cars. Automakers, especially in Brazil and the European market, use one of the variants of the word "flex" to indicate the FFV model label. For example, "Volvo Flex fuel", or "Volkswagen Total Flex", "Chevrolet Flex Power" or "Renault Hi-Flex". Ford sells its Focus model in Europe as the "Flex fuel" and in Brazil as the "Flex". In the United States, only since 2008, cars with an FFV engine have received a yellow sticker on the gas tank hatch labeled "E85/Gasoline" to distinguish them from cars running only on gasoline (fig. 5.13).




**Fig. 5.13. Marking of modern multi-fuel vehicles that are suitable for the use of bioethanol**

As the bioethanol content in the fuel increases, more fuel must be supplied to the engine to achieve the required power and the air supply must be adjusted accordingly.

Mass-produced vehicles that run on two-component fuel use two basic principles:

– in the fuel system (fig. 5.14) the Ethanol content sensor is installed (a sensor that detects the ethanol content in fuel in %) and based on its data, the fuel supply is corrected (used on cars in the USA, in Europe – Volvo, Saab, Ford);

– the bioethanol content is mathematically calculated based on corrections in the closed loop mode of the oxygen sensor in the exhaust gases, but a car with this

option costs 800-1000 euros more expensive (used by PSA Peugeot Citroen).

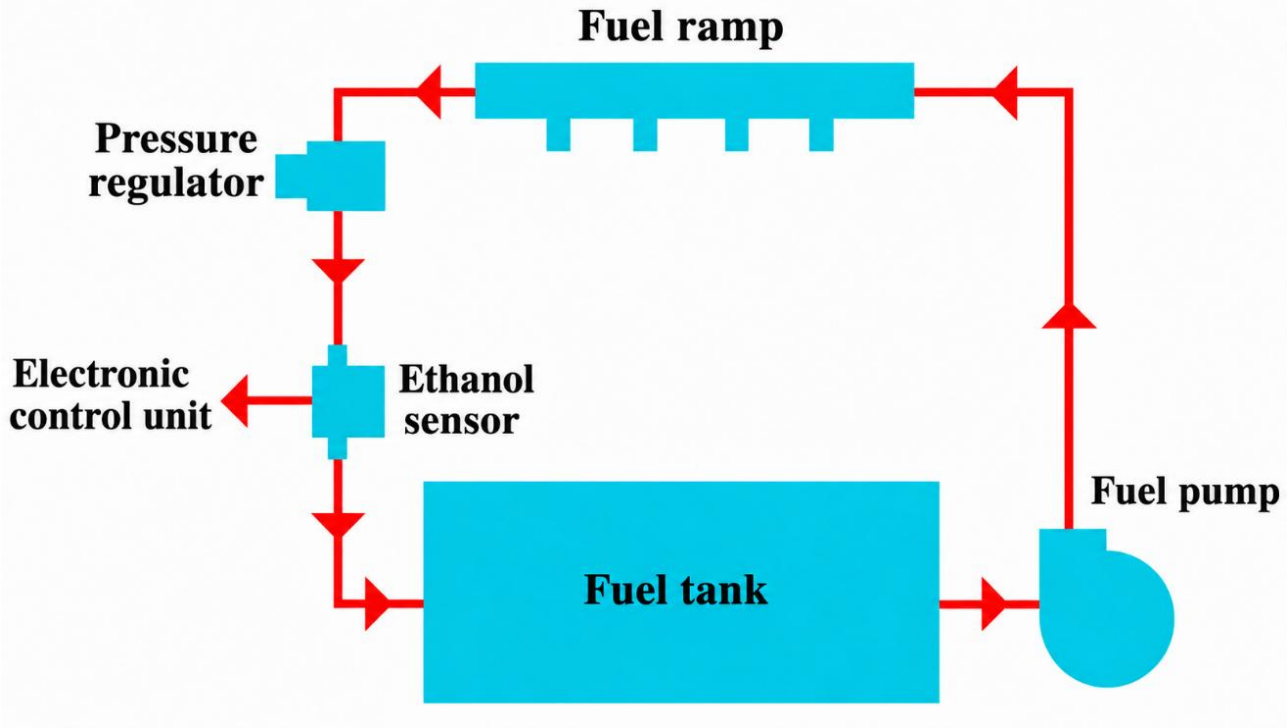


**Fig. 5.14. Diagram of the "flexible-fuel vehicle" (FFV) fuel system with an ethanol sensor in the fuel mixture**

The world has adopted the following classification of fuel based on bioethanol. The most common E5, E7, and E10 are mixtures with a low ethanol content (5, 7, and 10% by weight, respectively). Such fuel is fully suitable for use in gasoline engines and reduces the harmfulness of air emissions. It must be mentioned, that from 5 to 10% of bioethanol in fuel is the norm for most countries of the civilized world. For example, in Germany, E5 fuel has been sold since 2005, and since 2011, it has been replaced by E10 fuel.

The standard fuel for cars with "Flex-Fuel" engines is E85. Due to its lower energy consumption, bioethanol is cheaper than gasoline or diesel fuel. E95 fuel is also used – a mixture of 95% bioethanol and 5% fuel additive. For example, Scania (Sweden) mass-produces diesel buses and trucks running on 95% bioethanol (fig. 5.15 and 5.16).

The world is also developing tractors that can run on bioethanol. Thus, John Deere has created a high-tech engine that can run on various types of fuel, both mineral and biological origin, and which can be poured into the tank separately or in a mixture with appropriate proportions (fig. 5.17). Several sensors measure various parameters of fuel or its mixture. Next, the electronic control unit (ECU) adjusts the engine operation parameters until the appropriate toxic emissions standards are obtained.

There are some risks when using bioethanol. So, experts note that it is extremely important that bioethanol contains a minimum amount of water, and as there is a theoretical risk that the mixture in the engine will be divided into gasoline and water-alcohol balls. As a result, there may be: fuel overspending, detonation, and difficulties with starting the engine. In addition, bioethanol is an excellent solvent and oxidizer, which is why it can damage sealing gaskets and other plastic parts when it is contained

in gasoline (in large quantities). To prevent this from happening, it is necessary to use rust-resistant steel and bioethanol-resistant plastic in the engine design.




**Fig. 5.15. E95 fuel bus**

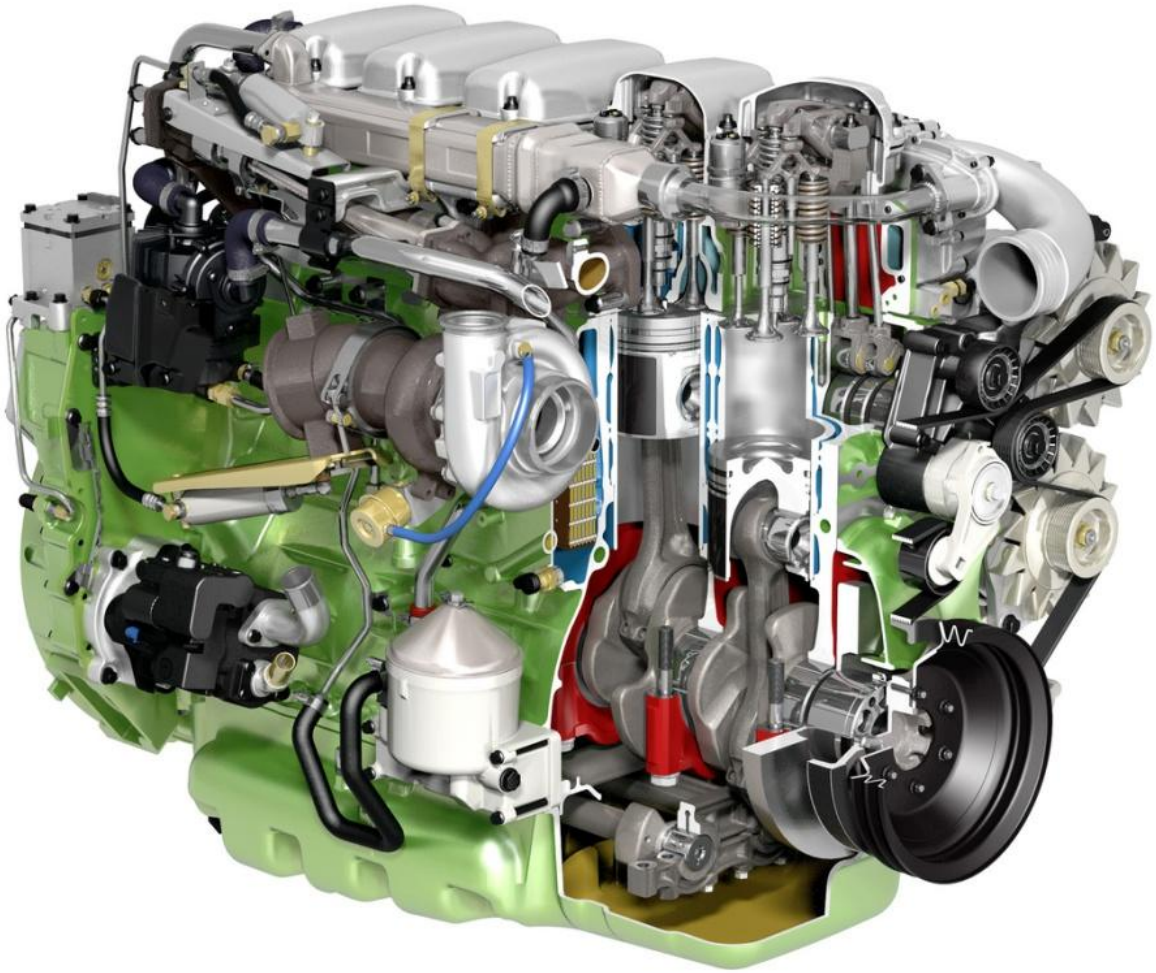

**Fig. 5.16. Scania bioethanol engine with a capacity of 270 hp**




**Fig. 5.17. John Deere flexible-fuel tractor**

However, the benefits of using bioethanol are undeniable. Bioethanol is cheaper than gasoline, which means that fuel containing it is also cheaper. The mixture of gasoline and bioethanol contains less sulfur, benzene and other harmful impurities. Accordingly, the amount of combustion products decreases, which lead to increased wear of the unit and oxidation of the lubricant. In general, engine oil, engine, and spark plugs last longer. Bioethanol burns more efficiently, has lower thermal conductivity and a high octane number. Therefore, the engine runs more stably, the risk of overheating is reduced, and the combustion chamber, cylinder exhaust valves and other parts of the engine operate in more favorable conditions. The engine heats up less in the heat or in urban traffic jams. Reducing the temperature of the coolant at the engine outlet reaches 15-20°C.

## 5.11. Investigation of the operation of the MeMz-245 engine on fuel mixtures with bioethanol

Studies of the operation of the MeMz-245 engine of the ZAZ-1102 car with the addition of 10% and 20% bioethanol to gasoline A-95 showed that it is necessary to increase the angle of advance of fuel injection (fig. 5.18.). When using mixtures, the hourly fuel consumption increases (fig. 5.19) and there is an improvement in the environmental performance of the engine (table 5.5).

It is established that the minimum consumption of gasoline A-95 corresponds to the established ignition advance angle (VAZ) of about 5 degrees of the crankshaft rotation, which is recommended by the manufacturer. The minimum consumption of gasoline with 10% bioethanol addition occurs at establishing ignition dwell angle (EIDA) of about 10 degrees, and with 20% – about 14 degrees of the crankshaft turning.

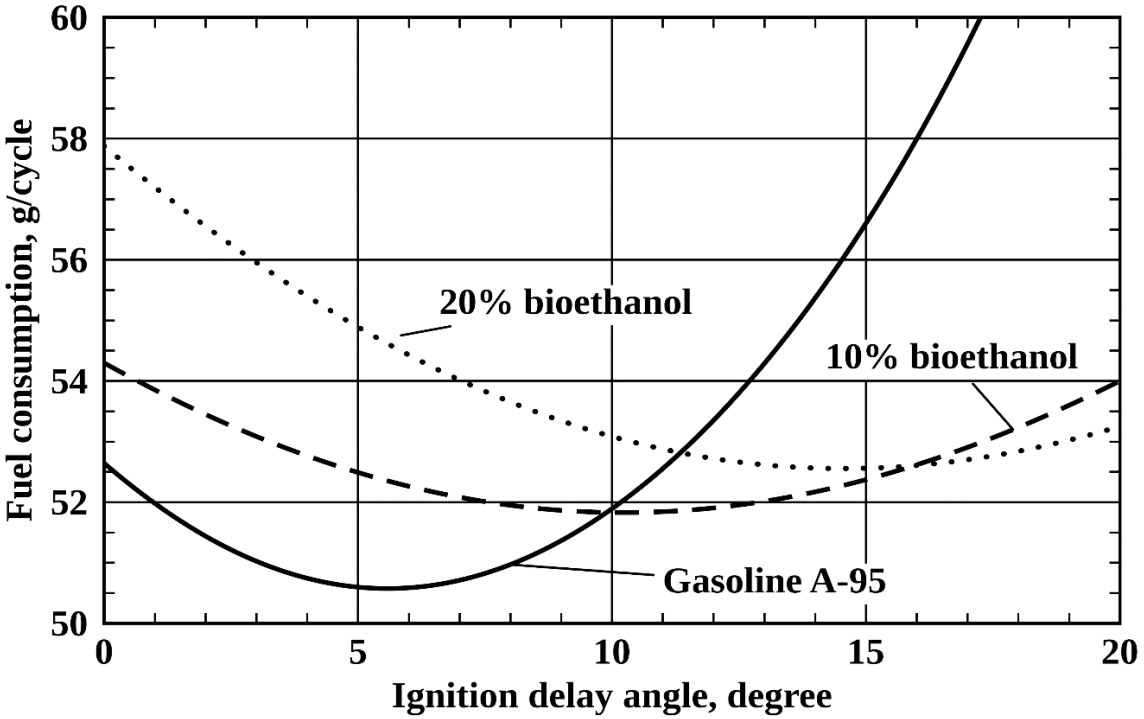


**Fig. 5.18. Fuel consumption of the ZAZ-1102 car depending on the ignition dwell angle when using A-95 gasoline and its mixtures with the addition of bioethanol**

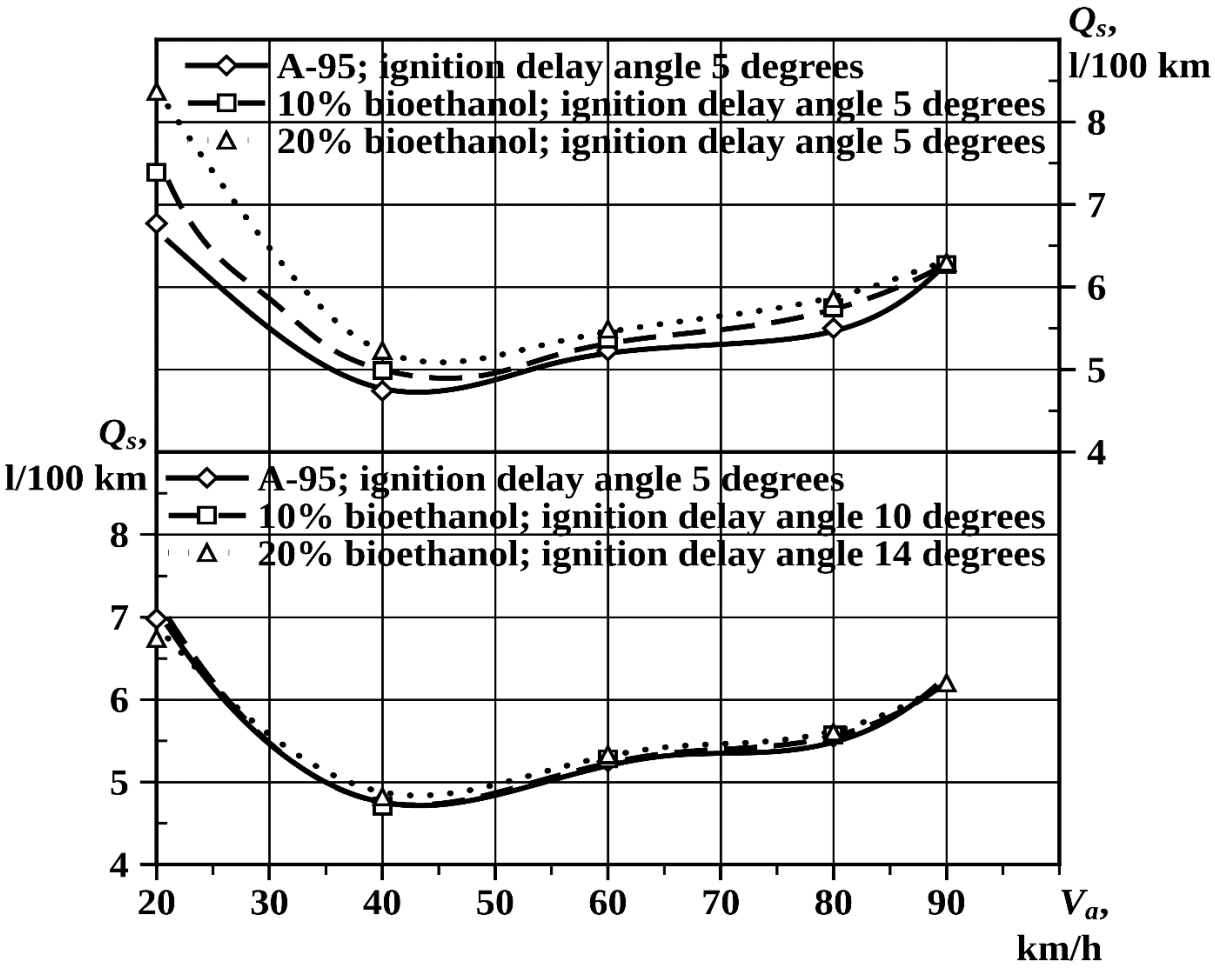


**Fig. 5.19. Fuel characteristics of the stable movement of the ZAZ-1102 car when using A-95 gasoline and its mixtures with the addition of 10% and 20% bioethanol**

Analysis of fuel characteristics showed that when the ZAZ-1102 Tavria car was powered with A-95 gasoline with a 10% bioethanol additive with a standard EIDA, fuel consumption in relation to standard gasoline ranged from 2 to 9.3%, depending on the speed limit. In the same mode and with a 20% addition of bioethanol, the overspend was from 4 to 10.5%, which is caused by a decrease in the calorific value of gasoline with the addition of bioethanol and a deterioration in the combustion process of the fuel mixture. Optimization of EIDA by increasing the values of EIDA by 5 and 9 deggrees of turning the crankshaft relative to the standard value when the engine is powered with gasoline with 10 and 20% bioethanol additives, respectively, improves fuel efficiency with an approximation of the consumption values of gasoline with bioethanol additives to the consumption of gasoline.

Table 5.5 shows the results of fuel efficiency and environmental indicators of the ZAZ-1102 Tavria car when using gasoline with bioethanol additives. Environmental estimates for mass emissions of *CO* oxide and carbon dioxide $CO_2$, $C_mH_n$ hydrocarbons, nitrogen oxides $NO_x$, and total mass emissions reduced to *CO*. The analysis shows that in the case of a regular EIDA of 5 degrees of the crankshaft turning using gasoline with 10% bioethanol added, the increase in fuel consumption relative to standard gasoline was 3.7%, with 20% – 8.5%. At the optimal value of EIDA - 10 degrees of crankshaft turning when the car is powered with gasoline with 10% bioethanol added, fuel consumption compared to standard gasoline was 2.5%. When using gasoline with a 20% bioethanol additive and an optimal EIDA of 14 degrees of crankshaft turning, the increase in fuel consumption compared to standard gasoline was 3.9%.

**Table 5.5. Influence of the value in the established ignition dwell angle on fuel consumption and environmental performance of the ZAZ-1102 Tavria car**

| **Fuel** | | **A-95** | **10% of bioethanol** | | **20% of bioethanol** | |
|---|---|---|---|---|---|---|
| **EIDA, degrees i. d. a.** | | **5** | **5** | **10** | **5** | **14** |
| **Fuel consumption** | g/cycle | 50.60 | 52.49 | 51.85 | 54.88 | 52.56 |
| | l/100 km | 6.57 | 6.80 | 6.71 | 7.08 | 6.78 |
| | MJ /100 km | 219.8 | 218.8 | 216.1 | 219.1 | 209.8 |
| **Mass emissions, g/cycle** | *CO* | 4.98 | 3.63 | 3.51 | 3.23 | 2.91 |
| | $C_mH_n$ | 0.504 | 0.398 | 0.415 | 0.411 | 0.466 |
| | $NO_x$ | 0.877 | 0.577 | 0.782 | 0.309 | 0.575 |
| | $CO_2$ | 208.2 | 201.9 | 195.9 | 205.8 | 195.8 |
| | reduced to *CO* | 42.64 | 28.58 | 36.96 | 17.25 | 28.02 |

Mass emissions of *CO* oxide and $CO_2$ carbon dioxide under the optimal EIDA when the car was powered with gasoline with 10% bioethanol addition decreased, respectively, by 3.3 and 3% compared to the standard EIDA, gasoline with 20% bioethanol addition – by 9.9 and 4.9%, respectively. By increasing the EIDA to optimal values when powering the car engine with gasoline with bioethanol additives, it improves the combustion process of the fuel-air mixture (an increase in the temperature in the engine cylinder), which leads to an increase in the content of nitrogen oxides

$NO_x$ by 35.5% with 10% bioethanol addition and 86.1% with 20% bioethanol addition, as well as by 4.3 and 13.4% $C_mH_n$ hydrocarbons. However, the mass emissions of $C_mH_n$ and $NO_x$ when operating at optimal EIDA do not exceed the values when powered with gasoline. At the same time, the total mass emissions reduced to *CO* when fed with gasoline with 10% bioethanol additive are 13.3% lower compared to gasoline and 34.3% lower compared to 20% bioethanol additive.

**Questions for self-assessment:**

1. What substance is called bioethanol?
2. Give a description of bioethanol.
3. What is the difference between bioethanol and ethanol?
4. Specify the main stages of the bioethanol production process.
5. Why bioethanol dehydration is needed?
6. What is the yield of bioethanol from major crops?
7. What is a distillation column?
8. What is a rectification column?
9. Describe the technology of obtaining bioethanol from starch-containing raw materials.
10. Describe the technology of obtaining bioethanol from sugar-containing raw materials.
11. Describe the technology for producing bioethanol from cellulose-containing raw materials.
12. What is the essence of the technology for producing bioethanol from algae?
13. What methods of bioethanol dehydration do you know?
14. What is a molecular sieve?
15. Which countries are leaders in bioethanol production?
16. What are the main areas of use of bioethanol?
17. Why is it necessary to prepare raw materials for the production of bioethanol?
18. How does the fermentation of raw materials take place in the production of bioethanol?
19. Explain the essence of the technological process of saccharification of raw materials.
20. Explain the essence of the enzymatic method of bioethanol production.
21. For what purpose is grain crushed in the production of bioethanol?
22. What are the ways to reduce water consumption when preparing mixes?
23. Describe the technological scheme for the production of alcohol from starch-containing raw materials.
24. What does the analysis of the physic-chemical properties of bioethanol show?
25. What are the main advantages of using bioethanol as a motor fuel?
26. What are the main advantages of using bioethanol as an additive to gasoline?
27. What are the main disadvantages of using bioethanol in internal combustion engines?
28. What is the reason for the prospects of using bioethanol in the world?

29. In which countries is bioethanol most common and why?
30. What do you know about the use of bioethanol in the United States?
31. What do you know about the use of bioethanol in Brazil?
32. What do you know about the use of bioethanol in the European Union?
33. What are the features of the flexible-fuel engine system (FFV)?
34. Are there any prospects for using bioethanol in Ukraine?
35. What mixtures of gasoline and bioethanol can conventional internal combustion engines run on?
36. What should be changed compared to running on gasoline when the bioethanol content in the fuel mixture increases?
37. Explain the features of using bioethanol in internal combustion engines.
38. What types of bioethanol fuels do you know? Name their brands.
39. What are the features of engines that use bioethanol?
40. What are the ways to overcome the disadvantages of using bioethanol in engines?
41. What are the advantages of using bioethanol in engines?
42. What are the risks of using bioethanol as a motor fuel?
43. At what values of the ignition dwell angle is the minimum fuel consumption achieved with 10% and 20% bioethanol addition?
44. What is the fuel consumption compared to standard gasoline at the optimal ignition dwell angle, provided that the car is powered with gasoline with 10% and 20% bioethanol additive?
45. How much are the total mass emissions, reduced to CO when fed with gasoline with 10% and 20% bioethanol added, less compared to gasoline?
46. How much does the hourly and specific fuel consumption increase when using a mixture containing 10% bioethanol?

**References:**


1. Bioethanol. *Wikipedia*. URL: https://uk.wikipedia.org/wiki/bioethanol (date of access: 15.05.2025).
2. Biofuels Annual report. URL: http://www.usda-france.fr/media/Biofuels%20Annual_The%20Hague_EU-27_6-25-2012.pdf (date of access: 12.03.2024).
3. Golub G. A., Kukharets S. M., Yarosh Y. D., Kukharets V. V. Integrated use of bioenergy conversion technologies in agroecosystems. *INMATEH – Agricultural Engineering*. 2017. Vol. 51, No. 1. P. 93–100.
4. Golub G. A., Skydan O. V., Kukharets V. V., Yarosh Y. D., Kukharets S. M. The estimation of energetically self-sufficient agroecosystem's model. *Journal of Central European Agriculture*. 2020. Vol. 21, No. 1. P. 168–175.
5. Kirilenko I. G., Demyanchuk B. B., Andryushchenko B. V. Formation of the Ukrainian biofuel market: preconditions, prospects, strategy. *Ekonomika APK*. 2010. No. 4. P. 62.
6. Kodenska M. Yu. Substantiation of the need to develop investment projects in the development of the bioethanol industry based on sugar beet production. Kyiv : NSC "IAE", 2010. 12 p.

7. Marinchenko V. O., Shiyan P. L., Tsigankov P. S., Jolner I. D. Alcohol technology. Vinnytsia : Podillya-2000, 2003. 496 p.

8. Melnichuk O. I. Problems and prospects of development of the alcohol industry of Ukraine in the context of biofuel production. *Economy and State*. 2012. No. 2. P. 15–21.

9. Mesel-Veseliak V. Ya., Pashtetskyi V. S. Efficiency of Alternative Energy Sources in the Agriculture of Ukraine. *Ekonomika APK*. 2011. No. 12. P. 3–9.

10. Non-traditional and renewable energy sources / O. I. Solovey, Yu. G. Lega, V. P. Rosen et al. Cherkasy : ChSTU, 2007. 490 p.

11. Polunkin E. V., Zubenko S. O., Gaidai O. O., Kuznetsova O. V. Alcohol-containing fuels. *Bulletin of NAU*. 2010. No. 2. P. 137–141.

12. Prospects for the Development of Bioenergy in Ukraine / M. V. Roik, V. L. Kurylo, O. M. Hanzhenko et al. *Sugar Beets*. 2012. No. 2–3 (86–87). P. 6.

13. Pryshliak N. V. Perspectives of bioethanol production of sugar beets in Ukraine. *Agricultural Economics* : International Research and Production Journal. 2014. No. 3. P. 126–131.

14. Pryshlyak N. V. Bioethanol from sugar beets and the efficiency of its production in Ukraine. *Bulletin of the Kharkiv National Agrarian University named after V. V. Dokuchaev. Series: Economic Sciences*. 2014. No. 7. P. 280–288.

15. Pryshlyak N. V., Gutsalenko L. V. Analysis of the state and prospects of the bioethanol market in the United States. *Innovative economy* : All-Ukrainian scientific and production journal. 2013. No. 6 (44). P. 154–157.

16. Pryshlyak V. M., Mikhalchishina L. G., Pryshlyak N. V. Analysis of the development of the bioethanol market in Brazil. *Economic analysis* : collection of scientific works of Ternopil National Economic University. 2012. Iss. 10, Part 1. P. 340–342.

17. Prysyazhnyuk O. I., Shevchenko I. L. Aspects of using bioethanol as an alternative energy source. *Sugar beets*. 2009. No. 3. P. 14–15.

18. Renewable energy in agriculture / G. A. Golub, O. V. Skydan, S. M. Kukharets, N. M. Tsyvenkova, O. A. Marus, Y. D. Yarosh, V. V. Chuba, M. Yu. Pavlenko ; ed. by G. A. Golub, O. V. Skydan. Kyiv ; Zhytomyr : NULES of Ukraine ; Polissia University, 2023. 400 p.

19. Skoruk O. P., Zubar I. V. Priority directions of bioethanol production in Ukraine. *Ekonomika APK*. 2014. No. 2. P. 36–42.

20. The story of Brazil's ethanol programme. *ELLA. Environmental management : Brazil's ethanol programme*. URL: https://assets.publishing.service.gov.uk/media/57a08a08ed915d622c00050b/130806_ENV_BraEthPro_GUIDE.pdf (date of access: 27.04.2025).

21. US Department of Agriculture. URL: http://www.ers.usda.gov/media/521667/corndatatable.htm (date of access: 07.01.2026).

22. Zakharchenko M. O. Improving fuel economy and environmental performance of cars by rational use of gasoline with bioethanol additives : abstract of the dissertation for the degree of candidate of technical sciences : specialty 05.22.20 "Operation and repair of vehicles". Kyiv, 2008. 28 p.

# 6. BIOGAS AND BIOMETHANE PRODUCTION

**Lecture Plan:**

**6.1. Current trends in the development of technologies for manure removal and use 127**
**6.2. Current trends in the development of biogas plants 130**
**6.3. Analysis of methane formation in biogas plants 137**
**6.4. Kinetics of organic mass fermentation in biogas plants 141**
**6.5. The effect of anaerobic fermentation time on the specific yield of biomethane 148**

## 6.1. Current trends in the development of technologies for manure removal and use

One of the elements of waste-free agricultural production is the processing and use of manure. Low doses of organic fertilizers do not compensate for humus losses, which leads to deterioration of the biological properties of the soil and its degradation.

In this regard, there is a need to process manure of cattle and pigs, the share of which in the total amount of manure is the largest, into full-fledged organic fertilizers using biogas fermentation and composting technologies.

In the process of processing, farm manure is a source for producing gaseous fuels based on biomethane, as well as compost based on litter manure and slurry after methane fermentation, which should be the main type of organic fertilizers in crop production.

Slurry is a liquid that is released from manure during its removal and storage. It is used for the production of compost, as a liquid organic fertilizer and as a bio-raw material in biogas technologies.

One of the most important principles of compost production is the addition of carbon materials to the initial mixture, which are the main component of respiration and nutrition of microorganisms and carry out the process of aerobic fermentation. When laying materials for composting, it is necessary to maintain a certain ratio between nitrogen and carbon. To maintain a given balance, nitrogen-rich materials are saturated with carbon materials; in particular, the appropriate litter rate is added to manure. In order for the composting process to go in the right direction, the compost mixture must have carbon and nitrogen in the ratio

When using manure for the production of biogas, two technologies are distinguished: liquid-phase and solid-phase. With solid-phase technology, difficulties arise related to ensuring optimal conditions for the microbiological processes of biomass fermentation. First of all, this concerns the loading and homogenization of biomass that goes to fermentation. The use of liquid-phase fermentation is more common in the practice of using biogas plants. At the same time, they provide continuous input of small portions of incoming biomass into the methane tank, which is a mixing tank, where the set humidity and temperature are maintained without air access.

The temperature optimum of the methane fermentation process ranges from 35

to $55^0$C, in addition, liquid manure contains a significant amount of mineral inclusions, the presence of which is not desirable when manure is introduced into a biogas plant, since they do not participate in methane fermentation.

The system of manure removal from animal houses and the daily volume of manure significantly affect the volume of manure storage facilities, and therefore the capital costs required for their construction. In addition, when accumulating raw materials, it is necessary to take into account the fact that manure loses nitrogen and organic matter over time, which largely determines the effectiveness of the next stage of its use for compost production and biogas production.

It should be noted that methane fermentation does not provide disinfection of manure that is fermented in biogas plants; in addition, in the case of open storage of fermentation waste, methane is released. For example, in accordance with German renewable energy laws, increased attention is paid to closed storage facilities for storing biomass after fermentation. The size of such storage facilities, as a rule, is constructed with a volume that would ensure the content of fermented biomass for at least 180 days.

We have proposed the technology (fig. 6.1), which provides for the collection of a mixture of manure and litter along the area of keeping animals, its division into manure and litter manure, their removal from the livestock premises and the subsequent use of manure for anaerobic fermentation to obtain biogas, and litter manure containing litter for composting and further use of the resulting compost as organic fertilizer.

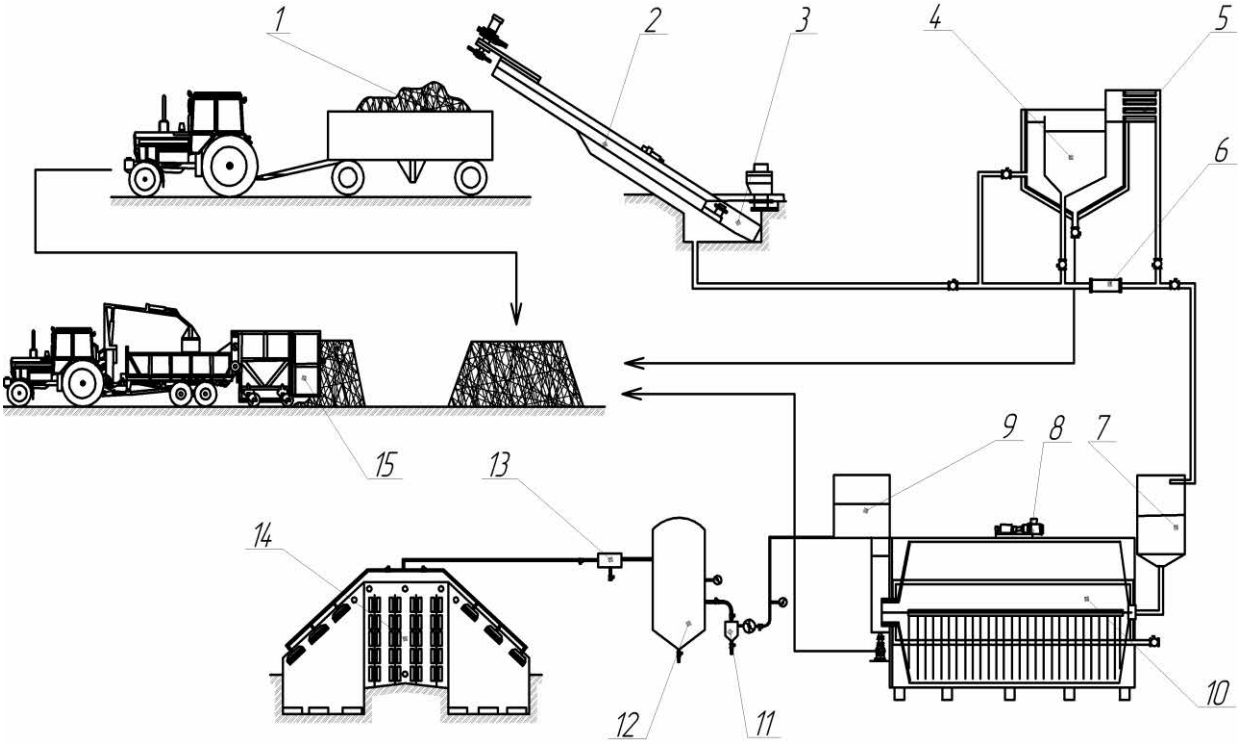


**1 – litter manure; 2 – inclined conveyor-separator; 3 – manure collector; 4 – heater-holder; 5 – heat exchanger; 6 – pump; 7 – heat exchanger; 8 – bioreactor drive station; 9 – inoculator; 10 – bioreactor; 11 – dehumidifier; 12 – gas tank; 13 – gas reducer; 14 – greenhouse; 15 – site and composting equipment**

**Fig. 6.1. Improved technological scheme for manure removal and processing**

The proposed technological scheme allows: dividing manure into slurry and litter manure by a conveyor-separator; preparing manure for methane fermentation in a heater-holder due to aerobic fermentation and heating; carrying out anaerobic fermentation of slurry and completing the processing by composting litter manure and fermented manure, after which the resulting products can be used as organic fertilizers.

With an increase in the dose of litter application, there is a decrease in the yield of slurry at a constant humidity value. We obtained a graph of the dependence of the manure yield on the animal species when applying different doses of litter with a maximum water retention capacity of 80% (fig. 6.2).

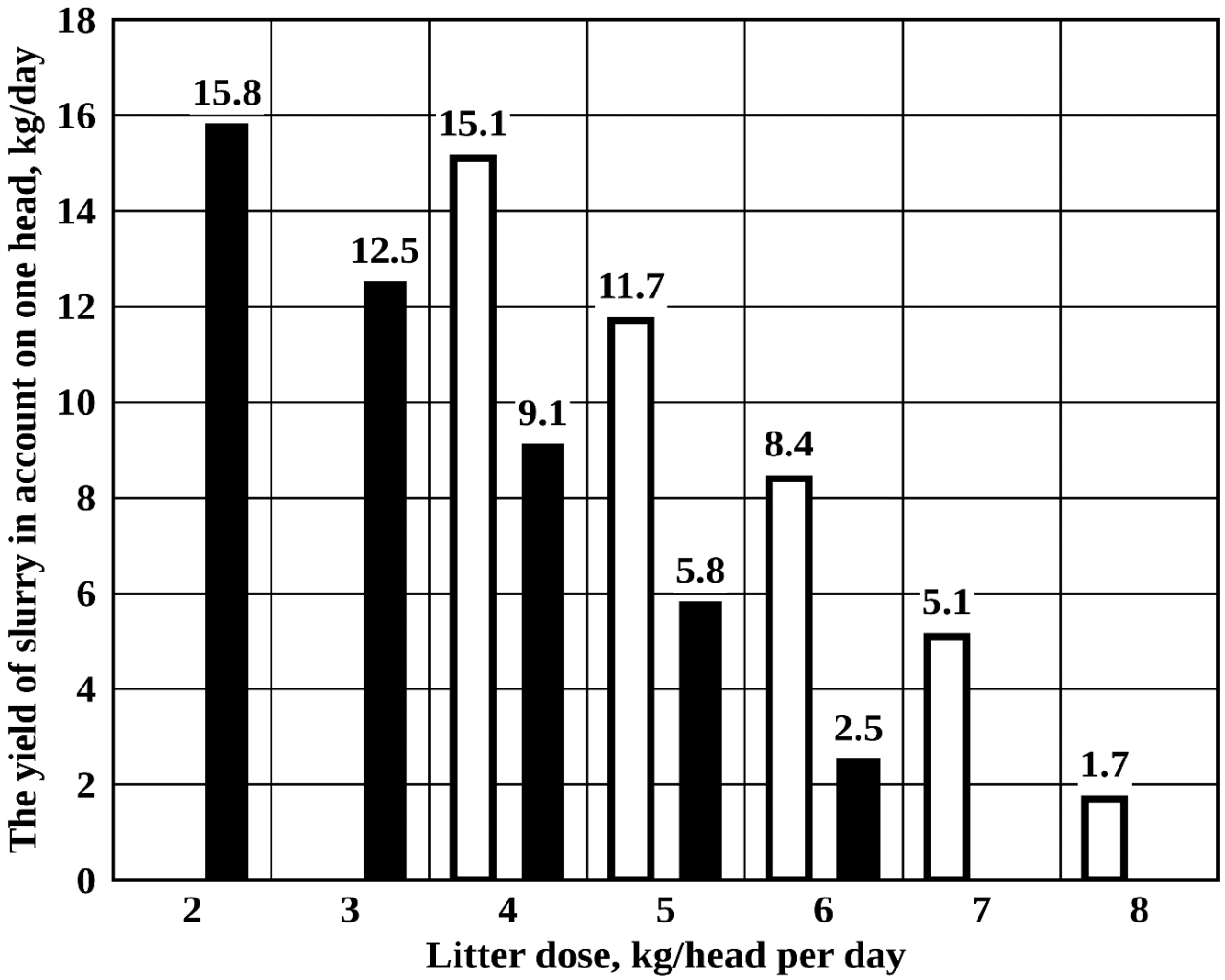


**Fig. 6.2. Dependence of slurry yield on litter dose**

The graph shows that with an increase in the dose of litter application, there is a decrease in the yield of slurry. Thus, for example, with a daily use of litter in the amount of 4 kg/head, the yield of slurry will be 15.1 kg/head per day for cattle and 9.1 kg/head per day for pigs, and with an increase in the dose of litter to 6 kg/head – 8.4 and 2.5 kg/head per day, respectively.

Calculations show (fig. 6.3) that reducing the application of litter for cattle from 7 to 5 kg/head per day leads to an increase in the amount of biogas twice from 20 to 40 l/head per day, but the yield of compost, provided that the return of fermented slurry after methane is practically unchanged and is in the range from 37 to 38 kg/head per

day. For pigs, the yield of biogas increases from 10 to 23 l/head per day when the dose of litter is reduced from 6 to 5 kg/head per day, and when the application of litter is reduced from 3 to 2 kg/head per day, the yield of biogas will be 43 and 50 l/head per day, respectively, and the compost yield under the above conditions is in the range from 22 to 24 kg/head per day.

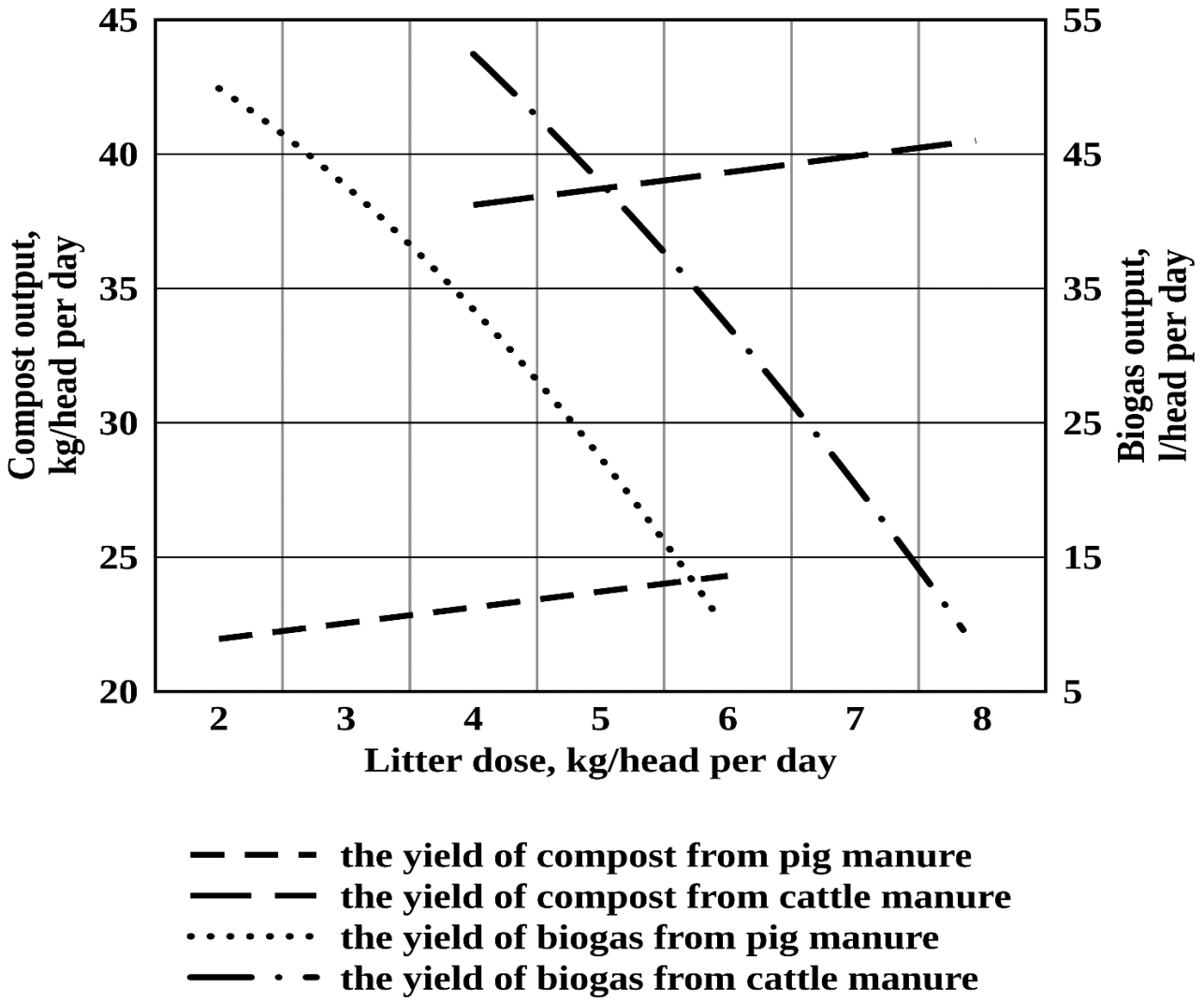


**Fig. 6.3. Effect of litter dose on biogas and compost yield**

When solving the problem of collecting and accumulating raw materials, it is necessary to take into account the system of manure removal from animal rooms adopted in a particular farm, the daily volume of manure and its composition.

Thus, by changing the dose of litter, it is possible to control the process of manure removal with planning the volume of further distribution of litter manure for aerobic fermentation and slurry for anaerobic fermentation in biogas plants with its subsequent return to the process of litter manure composting.

### 6.2. Current trends in the development of biogas plants

The need to process manure and dropping has opened up a new promising direction in the design of machinery and equipment for the agro-industrial complex.

Back in the seventeenth century, Jan Baptist Van Helmont discovered that decomposing biomass releases flammable gases. Alessandro Volta in 1776 came to the conclusion that there is a relationship between the amount of biomass decomposed and the amount of gas released. In 1808, Sir Humphrey Davy discovered methane in biogas. The first documented biogas plant was built in Bombay, India, in 1859. In the same year, biogas began to be used in the UK for street lighting.

The biogas market is currently the most developed in Europe, which is due to the fact that it was the developed EU countries that were the first to implement programs for switching to alternative energy sources and systematically supported initiatives aimed at introducing new biogas technologies.

Today, the first place in terms of the number of active biogas complexes belongs to Germany – in 2010 there are more than 9 thousand of them. Only 7% of the biogas produced by these enterprises enters gas pipelines, while the rest is used for the needs of the producer. In the future, 10-20% of the natural gas used in the country can be replaced with biogas. In terms of the scale of biogas use, Denmark is the leader: this type of fuel provides almost 20% of the country's energy consumption.

Modern biogas plants are divided into two types according to the technology of preparation and fermentation of raw materials: liquid-phase (humidity of the fermented organic mass is more than 85%) and solid-phase (humidity of the organic mass is less than 85%) technologies.

Solid-phase fermentation is a series of sequential operations (fig. 6.4). Raw materials such as biological waste, manure, sludge, fats or green matter are placed in a hermetically sealed fermenter and are usually heated and mixed. At the same time, due to anaerobic processes, biogas is formed. Currently, biogas is mainly used for combined generation of electricity and heat in block mini-TPPs. The gas mixture is purified from hydrogen sulfide ($H_2S$) and fed to a gas-piston engine that drives the generator. The electric current generated in this way enters the network.

Heat from the engine cooling system and exhaust gas heat are removed by means of a heat carrier for further use. Part of this heat (15-30%) is necessary for heating bio-raw materials and maintaining the selected fermentation temperature, since bacterial strains responsible for the decomposition of biomass are most productive in the temperature range from 37°C (mesophilic) to 55°C (thermophilic).

Excess heat can be used by different consumers. Installations with year-round heat use are most efficient. In some projects, biogas is enriched and pumped into a gas pipeline. This increases the chances for the construction of a biogas plant in those areas where there are no heat consumers.

Enriched biogas can also be used as fuel for motor vehicles. After methane fermentation, the residual substrate has almost no unpleasant smell and is used as an organic fertilizer in agricultural production.

We have established (fig. 6.5) that the specific yield of biogas increases with increasing manure humidity and temperature and fermentation exposure. Thus, when exposed to manure fermentation for 15 days and at the humidity of the fermented mass of cattle manure $W$=77% and the fermentation temperature $T$=35$^0$C, the specific yield of biogas did not exceed 1 l/kg of dry mass per day, and at the humidity of the fermented mass $W$=87% and the fermentation temperature $T$=53$^0$C, the specific yield

of biogas was in the range of 4-5 l/kg of dry mass per day.

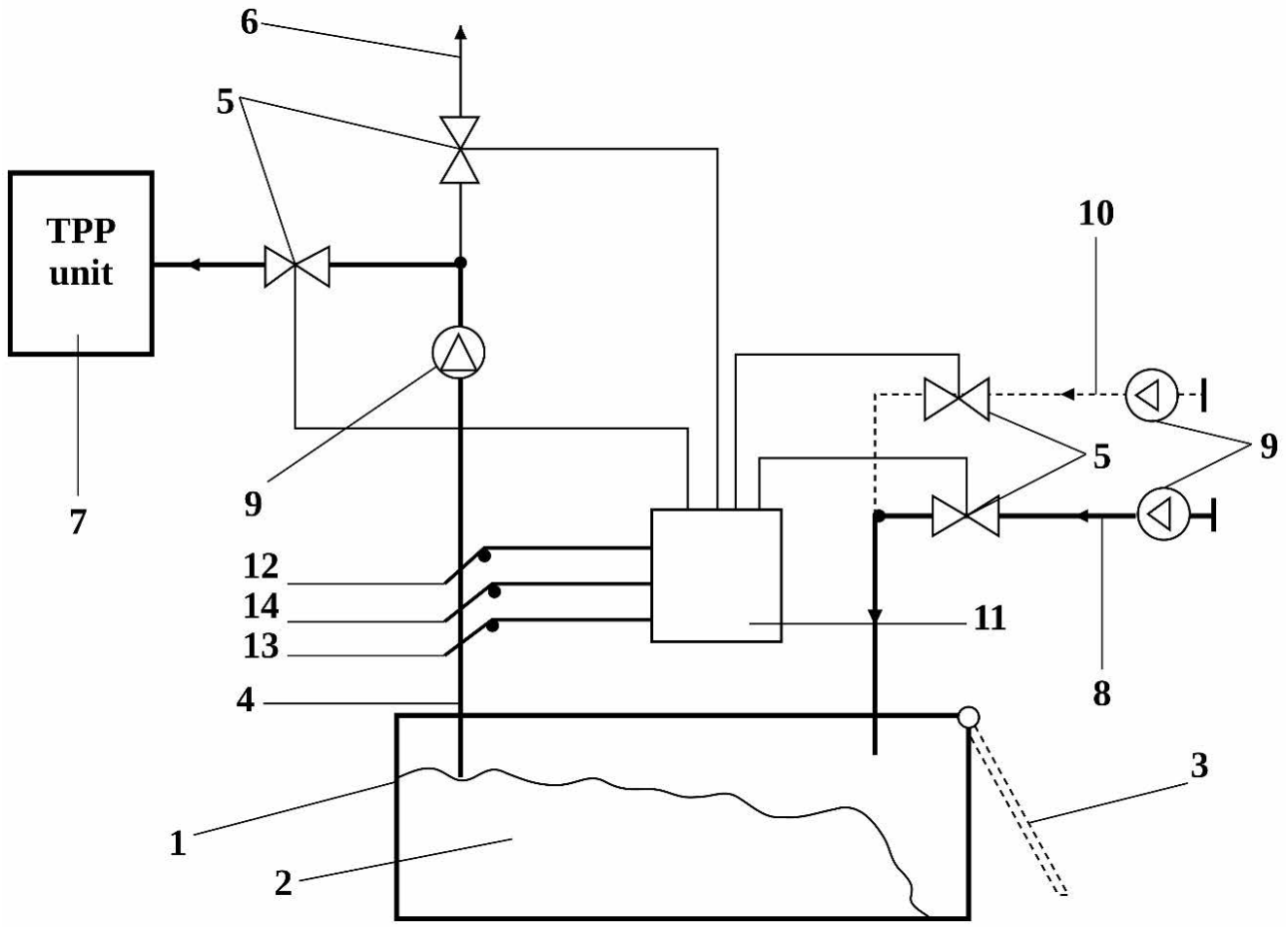


**1 – fermenter; 2 – biomass; 3 – loading and unloading hole; 4 – biogas outlet; 5 – valve; 6 – gas pipeline; 7 – TPP unit; 8 – TPP exhaust gas line; 9 – fan; 10 – fresh air line; 11 – control panel; 12 – methane sensor; 13 – carbon dioxide concentration sensor; 14 – sensor for determining the volume flow of biogas**

**Fig. 6.4. Diagram of a solid-phase biogas plant**

In the development of solid-phase fermentation technologies, it is necessary to pay attention to improving the microbiological processes of biomass fermentation and finding effective design and technological solutions for fermenters, especially with regard to technological operations of loading biomass, its continuous mixing and maintaining a stable temperature regime of the fermenter.

Thus, the low efficiency of the methane release process during solid-phase fermentation in existing bioreactors is primarily due to the lack of means for proper homogenization of the reacting biomass.

A common method of biogas production is anaerobic digestion of liquid biomass ($W$=88-95%) by methane-generating microorganisms. The use of liquid-phase technological processes is more common in the practice of using biogas plants. This process consists in continuous introduction of small portions of incoming raw materials into the methane tank, which is a mixing tank without air access, where the set humidity and temperature are maintained. The scheme of the bioreactor, which is mainly equipped with foreign BGPs, is presented at (fig. 6.6).

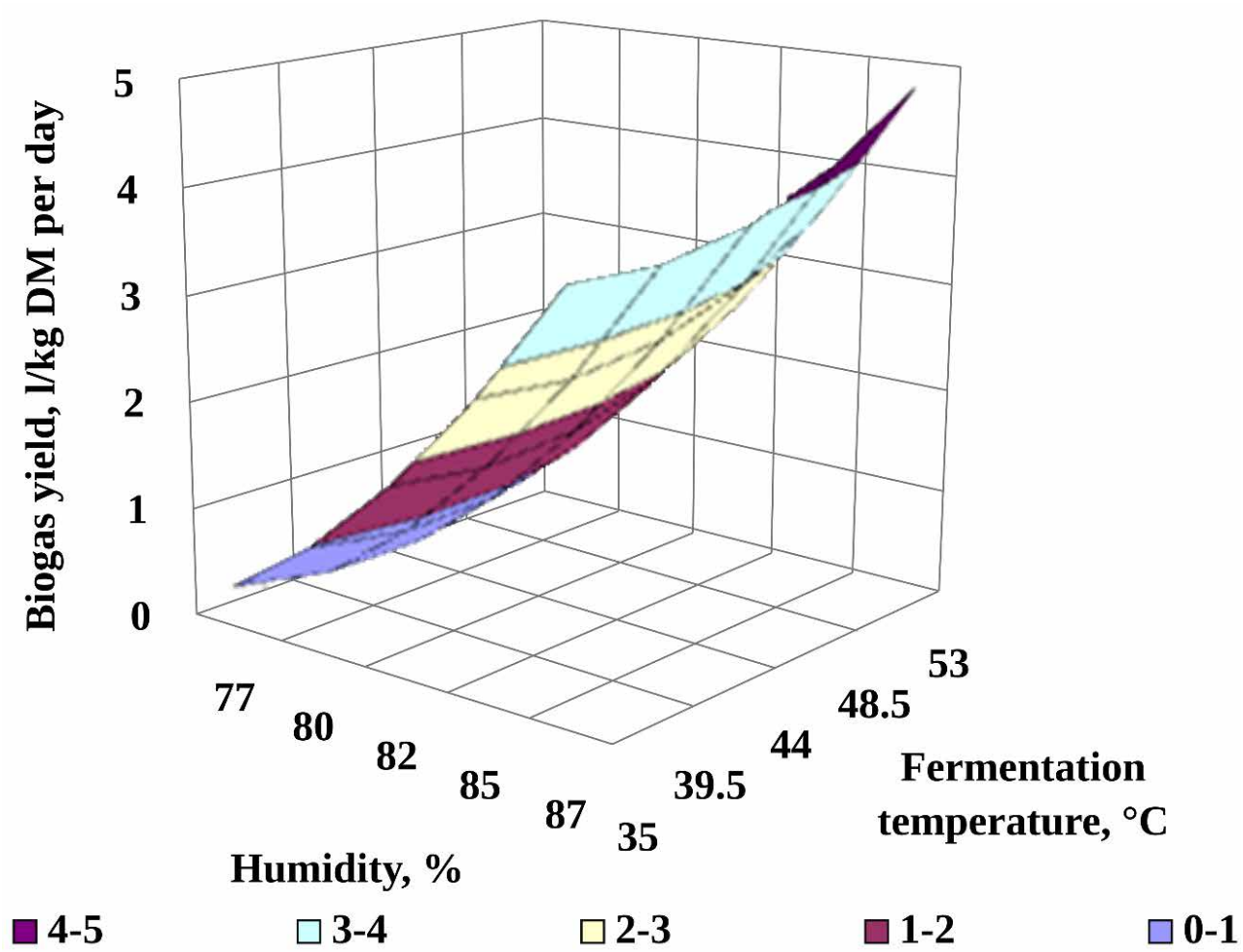


**Fig. 6.5. Dependence of biogas yield on fermentation temperature and biomass humidity**

Such reactors are made of reinforced concrete or steel and have an anti-corrosion coating. Special mixers ensure the movement of raw materials with the main reacting biomass. This contributes to a certain uniformity of the fermentation mixture, partially curbing the formation of a surface crust. The biogas released during fermentation accumulates under the dome, then passes through the purification system and is fed to consumers (boiler or cogeneration plant).

The design of biogas plants is based on the principle of modularity, which allows you to increase their productivity if necessary.

The Western European market offers a significant variety of biogas plants of various capacities and designs: large (more than 1000 kW), medium (from 500 to 1000 kW) and small installations (up to 500 kW). Cylindrical reactors predominate in existing BGPs. In such reactors, it is possible to mix the substrate with a certain efficiency, unload the fermented substrate, remove biogas and destroy the surface crust. Concrete, reinforced concrete, steel sheet, and fiberglass are used in the construction of reactors. The capacity of the fermentation chamber must not have air access, and the housings must have thermal insulation and corrosion resistance. In the middle of the fermentation chamber, a constant temperature must be maintained, for this purpose, it is equipped with devices for thermal stabilization. It should be noted that the presented version of the bioreactor, like most existing ones, has thermal insulation and ensures

winter performance not only in areas of Southern and in Central Europe with a mild climate, but also in countries with a continental climate. Options for implementing such installations on the territory of Ukraine are shown in fig. 6.7, and their main indicators in table 6.1.

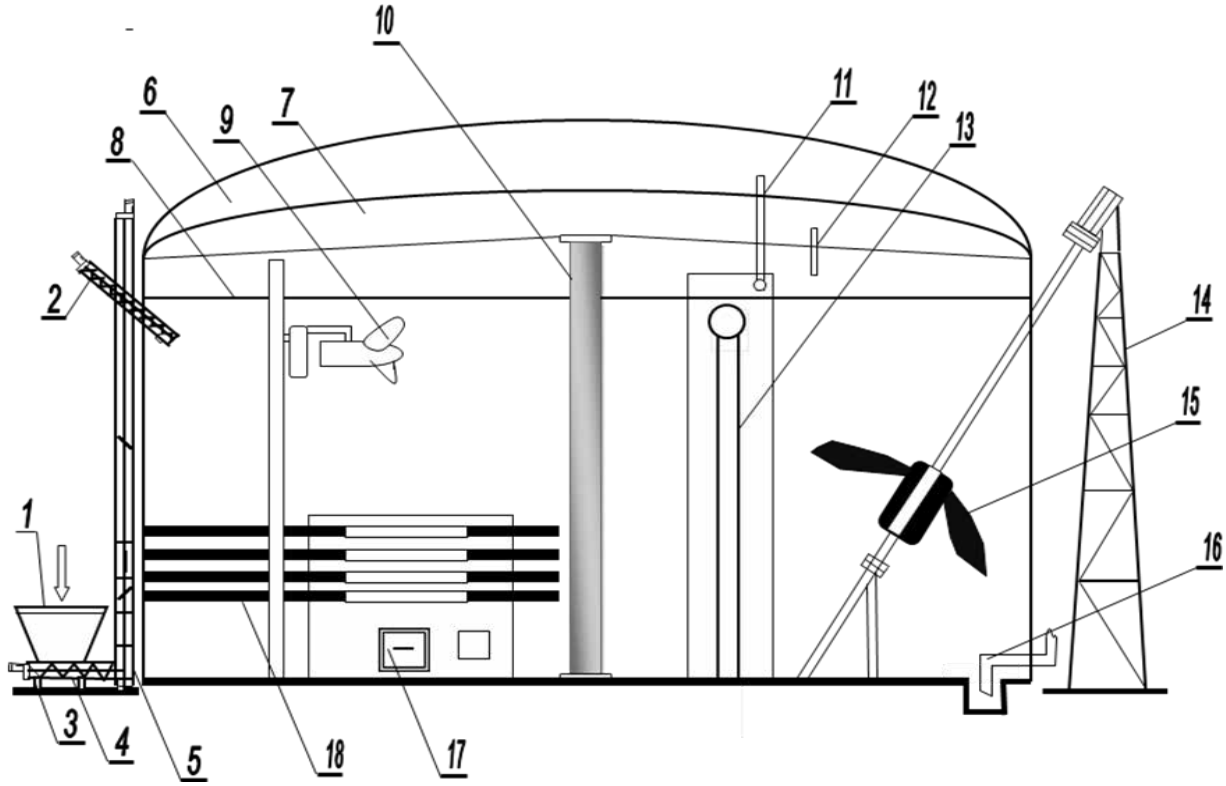


**1 – hopper for bulk substrate; 2 – feed screw conveyor; 3 – weighing platform; 4 – screw lower conveyor; 5 – lifting screw conveyor; 6 – air mixer; 7 – biogas dome; 8 – filling level; 9 – vertical movable agitator; 10 – central support; 11 – air supply pipe; 12 – biogas branch pipe; 13 – liquid manure supply pipe; 14 – mixer support; 15 – inclined agitator; 16 – branch pipe for biomass drainage; 17 – temperature control system; 18 – biomass heating system**

**Fig. 6.6. Diagram of a liquid-phase biogas plant**

The disadvantage of this type of biogas reactors is that due to insufficient and uneven heating of various parts of the mixture, temperature fluctuations in the volume of the substrate become significant. This violates technological requirements and reduces productivity in terms of biogas yield when compared to the theoretical one. Due to inconsistencies in the vertical gradient of temperatures in the lower zone, a cold, sedentary layer is formed, and the upper zone overheats. The disadvantages of such reactors include large areas of heat exchangers, which leads to a significant increase in the cost of constructing a reactor. Fermentation technology in biogas plants requires compliance with certain acceptable temperature limits, and stabilization of heat exchange between the heater and the substrate.

When using flow-through reactors, there is a possibility that a small part of the fresh biomass supplied to the reactor will be immediately discharged from the reactor. This issue is best solved by feeding small portions of substrate to the reactor several

times a day, as well as using several reactors operating both in parallel and in series.



**Fig. 6.7. Options for implementing liquid-phase biogas plants in Ukraine**

The experience of operating such liquid-phase reactors indicates difficulties due to the imperfection of the process, which is performed using mechanical screw mixers, the ability of which to mix the substrate in a specific period of time in a specific volume without mixing the substrate layers in a vertical plane, does not meet the requirements of the technological process of homogenization and the needs of supplying nutrients to the colonies of methane-forming microorganisms throughout the entire volume of the bioreactor. In addition, in some reactors, the phenomenon of biomass stratification with the formation of unproductive ballast layers with different specific gravity is not eliminated.

As a result of the accumulation of the mineral component of biomass in the lower part of the reactor during the operation of the BGP, the productivity of the reactors decreases and after 2-3 years is 50% in relation to the design one, significantly worsening the operational and economic indicators of biogas production. Removing ballast layers is a time-consuming operation that must be performed in harmful conditions.

Technological processes of biogas production are constantly being improved in the direction of increasing the energy efficiency of biogas plants.

The experience of using biogas plants is most fully analyzed by the German Renewable Resources Agency. The authors of the analysis point out that in the absence of mixing of biomass in the reactor, after some time there is a separation of biomass with the formation of layers due to the difference in the density of individual mineral and organic components, as well as due to flotation of particles during gas release. In this case, most of the biomass of anaerobic bacteria is located in the lower part of the

reactor, and the organic part of the substrate biomass accumulates in the upper part of the reactor. The consequence of this is that the contact zone of anaerobic bacteria with the substrate biomass is limited by the boundary layer of these parts of the reactor. The floating crust of solid organic matter also blocks the release of biogas. Promoting the contact of anaerobic bacteria with the substrate biomass is provided by mixing the substrate, but intensive mixing should be avoided, since this can lead to the cessation of anaerobic digestion by disrupting the symbiosis of acetogenic and methanogenic bacteria. In practice, the compromise is achieved by slowly rotating the agitators or running them for a short time.

**Table 6.1. Indicators of existing biogas plants in Ukraine**

| Enterprise | Year of introduction into service | Type of raw material | Volume, $m^3$ | Power, MW |
|---|---|---|---|---|
| **"Zaporizhstal" Pig Farm** | 1993 | Pig manure | 600 | – |
| **"Agro-Oven" Pig Farm, Dnipropetrovsk region.** | 2003 | Pig manure | 2×1000 | 2×0.06 |
| **"Zelenyi Hai", Kherson region** | 2008 | Corn silage | 1150 | 2×0.125 |
| **"Elita", Kyiv region.** | 2009 | Cattle and pig manure | 1500 | 0.25 |
| **"UMK", Kyiv region.** | 2009 | Cattle manure | 3×2400+ 1×1000 | 0.625 |
| **"Danosha" Pig Farm, Ivano-Frankivsk region** | 2013 | Pig manure and corn silage | 2×5500 | 1 |
| **"Orel-Lider" Poultry Farm, Dnipropetrovsk region** | 2013 | Droppings and sorghum silage | 10×3500 | 5 |
| **Globinskyi Sugar Factory, Poltava region** | 2014 | Pulp and silage | 6×8000 | 16 |

Some of the solid mineral inclusions contained in manure-based substrates are released during biodegradation in the reactor. Mineral sediment leads to a decrease in the useful volume of the reactor. The experience of operating reactors of biogas plants has shown that there are already reactors that are half filled with mineral sediment, which can only be removed by an excavator after the fermentation process is completely stopped.

Floating layers, especially those based on fibrous substrates, often form a crust and if it is not stirred, the reactor must also be stopped to remove it. These shortcomings

of biogas plants have been noted in many scientific papers.

Thus, manure fermentation makes it possible to solve economic, environmental and sanitary-epidemiological problems that arise due to the accumulation of a large amount of animal waste. Biogas production is one of the waste-free technologies that performs an environmental and resource-saving function, because it not only does not lead to the formation of any waste, but also disposes of waste from agricultural, alcohol, food and other industries. And at the same time, it partially solves the problem of preserving traditional energy carriers. Ensuring mixing of substrate biomass layers in biogas reactors can be achieved by rotating the reactor in a suspended state with immersion in liquid.

### 6.3. Analysis of methane formation in biogas plants

It is known that at the first stage of anaerobic digestion, under the action of bacteria, the substrate is hydrolyzed to form organic acids, alcohols, and simple carbohydrates. In the second stage, acetic acid, hydrogen, and carbon dioxide are formed. These stages of anaerobic digestion can be generalized by the following equations:

$$C_6H_{12}O_6 + 2H_2O \rightarrow 2CH_3COOH + 4H_2 + 2CO_2 \quad (6.1)$$

$$CH_3CH_2OH + H_2O \rightarrow CH_3COOH + 2H_2 \quad (6.2)$$

$$CH_3CHOHCOOH + H_2O \rightarrow CH_3COOH + 2H_2 + CO_2 \quad (6.3)$$

$$CH_3CH_2CH_2COOH + 2H_2O \rightarrow 2CH_3COOH + 2H_2 \quad (6.4)$$

$$CH_3CH_2COOH + 2H_2O \rightarrow CH_3COOH + 3H_2 + CO_2 \quad (6.5)$$

$$CH_3CH_2CH_2CH_2COOH + 4H_2O \rightarrow 2CH_3COOH + 5H_2 + CO_2, \quad (6.6)$$

where $C_6H_{12}O_6$ – glucose; $CH_3CH_2OH$ – ethanol; $CH_3CHOHCOOH$ – lactic acid; $CH_3CH_2CH_2COOH$ – butyric acid; $CH_3CH_2COOH$ – propionic acid; $CH_3CH_2CH_2CH_2COOH$ – valeric acid; $H_2O$ – water; $CH_3COOH$ – acetic acid; $H_2$ – hydrogen; $CO_2$ – carbon dioxide.

In the future, methanogenesis occurs due to the activity of microorganisms that reduce carbon dioxide to methane, as well as those that eventually decompose acetic acid into methane and carbon dioxide:

$$4H_2 + CO_2 \rightarrow CH_4 + 2H_2O \quad (6.7)$$

$$CH_3COOH \rightarrow CH_4 + CO_2 \quad (6.8)$$

where $CH_4$ – methane.

Published sources indicate the existence of various methods for determining the specific yield of biogas during the operation of biogas plants, but there is a need for an in-depth analysis of the factors that determine the production of biomethane, as well as justification of the directions for intensifying this process.

Combining the equations of the stage of formation of acetic acid, hydrogen and carbon dioxide (6.1-6.6) with the equations of methanogenesis (6.7, 6.8), we obtain:

$$C_6H_{12}O_6 \rightarrow 3CH_4 + 3CO_2 \quad (6.9)$$

$$CH_3CH_2OH \rightarrow 1.5CH_4 + 0.5CO_2 \quad (6.10)$$

$$CH_3CHOHCOOH \rightarrow 1.5CH_4 + 1.5CO_2 \quad (6.11)$$

$$CH_3CH_2CH_2COOH + H_2O \rightarrow 2.5CH_4 + 1.5CO_2 \quad (6.12)$$

$$CH_3CH_2COOH + 0.5H_2O \rightarrow 1.75CH_4 + 1.25CO_2 \quad (6.13)$$

$$CH_3CH_2CH_2CH_2COOH + 1.5H_2O \rightarrow 3.25CH_4 + 1.75CO_2. \quad (6.14)$$

The calculated material balance of anaerobic fermentation of the above-mentioned organic biomass substances in accordance with equation (6.9-6.14) will have the following form:

$$180 \text{ kg } (C_6H_{12}O_6) = 48 \text{ kg } (CH_4) + 132 \text{ kg } (CO_2) \quad (6.15)$$

$$46 \text{ kg } (CH_3CH_2OH) = 24 \text{ kg } (CH_4) + 22 \text{ kg } (CO_2) \quad (6.16)$$

$$90 \text{ kg } (CH_3CHOHCOOH) = 24 \text{ kg } (CH_4) + 66 \text{ kg } (CO_2) \quad (6.17)$$

$$88 \text{ kg } (CH_3CH_2CH_2COOH) + 18 \text{ kg } (H_2O) = 40 \text{ kg } (CH_4) + 66 \text{ kg } (CO_2) \quad (6.18)$$

$$74 \text{ kg } (CH_3CH_2COOH) + 9 \text{ kg } (H_2O) = 28 \text{ kg } (CH_4) + 55 \text{ kg } (CO_2) \quad (6.19)$$

$$102 \text{ kg } (CH_3CH_2CH_2CH_2COOH) + 27 \text{ kg } (H_2O) = 52 \text{ kg } (CH_4) + 77 \text{ kg } (CO_2). \quad (6.20)$$

The material balance calculation data (table 6.2) show that during anaerobic fermentation, 60 to 80% of methane is formed by splitting acetic acid and 20 to 40% by using hydrogen to reduce carbon dioxide to methane, and 1.1 kg of biogas is formed from 1 kg of decomposed biomass.

Thus the microbiological decomposition while anaerobic fermentation of 1 kg of organic matter is accompanied by about 0.4 kg of methane yield and by 0.7 kg of carbon dioxide yield.

**Table 6.2. Biomethane yield indicators during anaerobic fermentation**

| Biomass component | Biomethane yield, %: | | Mass yield in terms of 1 kg of decomposed biomass | |
|---|---|---|---|---|
| | Due to splitting $CH_3COOH$ | Due to recovery $CO_2$ | $CH_4$ | $CO_2$ |
| $C_6H_{12}O_6$ | 66.7 | 33.3 | 0.267 | 0.733 |
| $CH_3CH_2OH$ | 66.7 | 33.3 | 0.522 | 0.478 |
| $CH_3CHOHCOOH$ | 66.7 | 33.3 | 0.267 | 0.733 |
| $CH_3CH_2CH_2COOH$ | 80 | 20 | 0.455 | 0.75 |
| $CH_3CH_2COOH$ | 57.1 | 42.9 | 0.378 | 0.743 |
| $CH_3CH_2CH_2CH_2COOH$ | 61.5 | 38.5 | 0.51 | 0.755 |
| **On average** | **66.45** | **33.55** | **0.4** | **0.7** |

Taking the assumption that biogas consists of only two gases – methane and carbon dioxide, to determine the density of biogas under normal conditions, it can be used the ratio:

$$\rho_{BG}^N = \rho_{CH_4}^N k_{CH_4} + \rho_{CO_2}^N \left(1 - k_{CH_4}\right) \quad (6.21)$$

where $\rho_{BG}^N$ – biogas density under normal conditions, $\text{kg}_{CH_4}/\text{m}_{CH_4}^3$; $\rho_{CH_4}^N$ – methane density under normal conditions, $\text{kg}_{CH_4}/\text{m}_{CH_4}^3$; $\rho_{CO_2}^N$ – carbon dioxide density under normal conditions, $\text{kg}_{CO_2}/\text{m}_{CO_2}^3$; $k_{CH_4}$ – volume content of biomethane in biogas, $\text{m}_{CH_4}^3/\text{m}_{BG}^3$.

The density of methane and carbon dioxide under normal conditions is determined taking into account the assumption that biogas is a mixture of ideal gases.

According to the equation of state of an ideal gas under normal conditions, it can be written:

$$\rho_{CH_4}^N = \frac{P_{BG}^N M_{CH_4}}{RT_{BG}};\ \rho_{CO_2}^N = \frac{P_{BG}^N M_{CO_2}}{RT_{BG}} \quad (6.22)$$

where $P_{BG}^N$ – biogas pressure in the reactor, Pa; $M_{CH_4}$ – molar mass of methane equal to the relative mass of the methane molecule, kg/kmol; $M_{CO_2}$ – molar mass of carbon dioxide, which is equal to the relative mass of the carbon dioxide molecule, kg/kmol; *R*=8314.41 J/(kmol K) - universal gas constant; $T_{BG}$ – biogas temperature in the reactor, *K*.

An example of calculating the density of methane, carbon dioxide, and biogas under operating conditions of a biogas reactor and under normal conditions is given in table 6.3.

**Table 6.3. Calculation of biogas density**

| **Indicator** | **Unit of measurement** | ***CH₄*** | ***CO₂*** |
|---|---|---|---|
| **Calculation under operating conditions of a biogas reactor** | | | |
| **Universal gas constant** | J/(kmol K) | 8314.41 | |
| **Molar mass** | kg/kmol | 16 | 44 |
| **Biogas pressure** | Pa | 102551 | |
| **Biogas temperature** | $^0$C | 37 | |
| **Gas density** | kg/m$^3$ | 0.636 | 1.750 |
| **Volume yield per 1 kg of decomposed biomass** | m$^3$/kg | 0.628 | 0.399 |
| **Gas concentration in biogas** | % | 61.1 | 38.9 |
| **Gas weight in 1 m$^3$ of biogas** | kg/m$^3_{BG}$ | 0.389 | 0.680 |
| **Biogas density** | **kg$_{BG}$/m$^3_{BG}$** | **1.069** | |
| **Calculation under normal conditions** | | | |
| **Biogas pressure** | Pa | 101325 | |
| **Biogas temperature** | $^0$C | 0 | |
| **Gas density** | kg/m$^3$ | 0.714 | 1.963 |
| **Gas weight in 1 m$^3$ of biogas** | kg/m$^3_{BG}$ | 0.436 | 0.763 |
| **Biogas density** | **kg$_{BG}$/m$^3_{BG}$** | **1.199** | |

Assuming that the amount of biogas produced is determined by the decomposition rate of organic matter during fermentation of organic biomass, the yield of biogas during fermentation in terms of normal conditions can be determined as follows:

$$V_{BG} = \rho_{BM}\left(1 - \frac{W_{BM}}{100}\right) k_{OM} k_{OM}^D \frac{m_{BG}}{\rho_{BG}^N}, \quad (6.23)$$

where: $V_{BG}$ – specific biogas yield from the reactor under normal conditions,

$m^3_{BG}/m^3_{BM}$ per day; $\rho_{BM}$ – biomass density, $kg_{BM}/m^3_{BM}$; $W_{BM}$ – biomass dampness, %; $\left(1-\frac{W_{BM}}{100}\right)$ – dry matter content in relation to the total biomass, $kg_{DM}/kg_{BM}$; $k_{OM}$ – organic matter content in relation to the volume of the total dry weight in fermenting biomass, $kg_{OM}/kg_{DM}$; $k^D_{OM}$ – the number of decomposed organic matter per day in relation to the total organic mass, $kg_{DOM}/kg_{OM}$ per day; $m_{BG}$ – biogas yield per unit of decomposed organic matter, $kg_{BG}/kg_{DOM}$.

A schematic representation of the yield of biomethane and biogas from decomposed organic matter is shown in fig. 6.8. The relationship between the decomposition intensity of organic mass and the specific yield of biomethane and biogas, as well as the fermentation time, is shown in fig. 6.9. The yield of biogas and biomethane increases proportionally with an increase in the level of decomposition of organic biomass in the reactor, and the fermentation time to reach 30% of the fermentation level decreases exponentially.

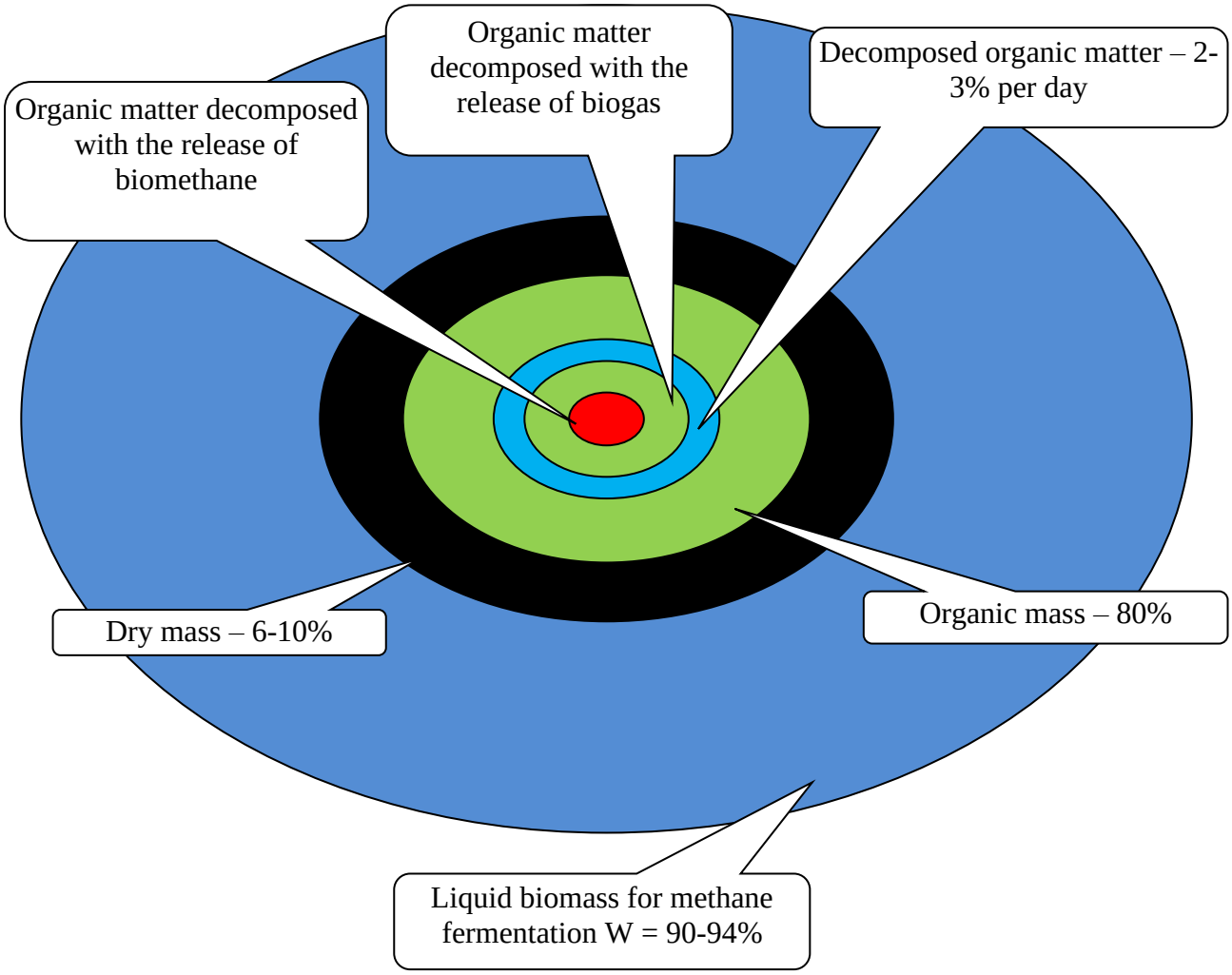


**Fig. 6.8. Schematic representation of the yield of biomethane and biogas from decomposed organic matter**

The main direction of intensification of the biomass fermentation process is to increase the level of decomposition of organic mass by creating appropriate conditions

for the development of anaerobic microflora.

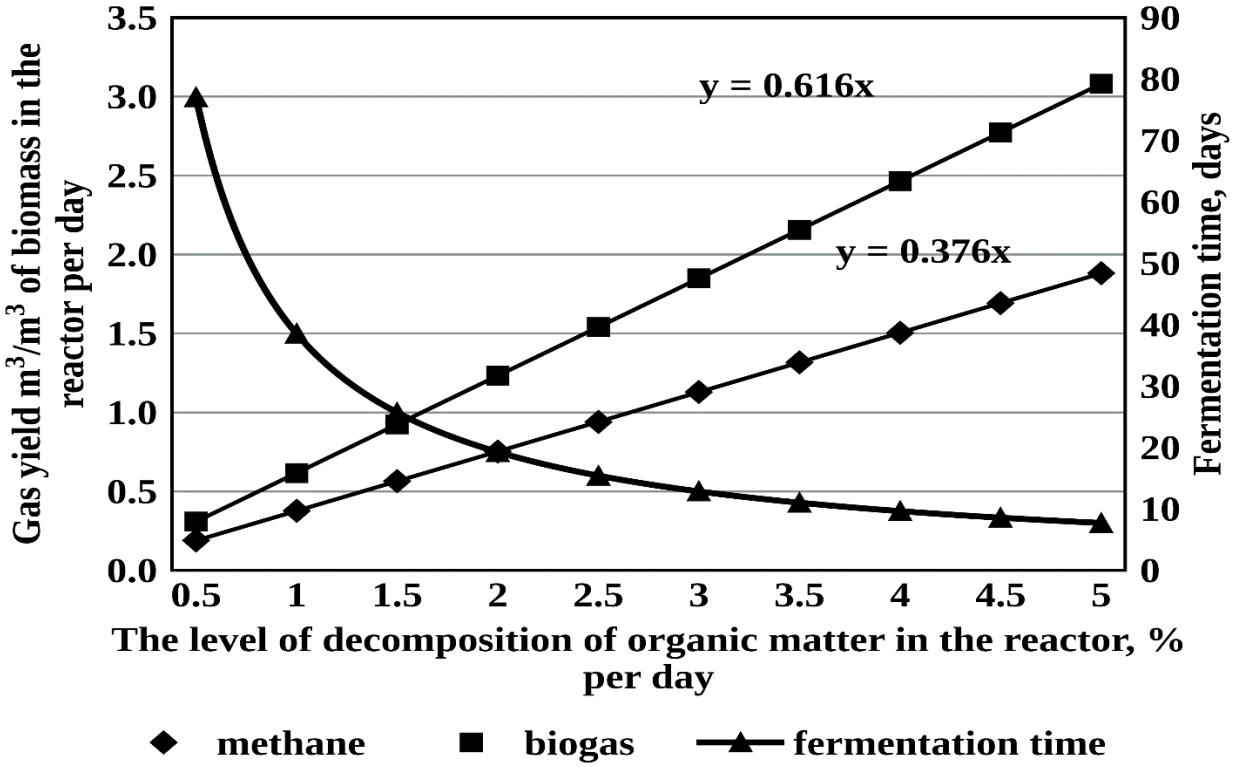


**Fig. 6.9. The effect of organic matter decomposing intensity on the specific yield of biomethane, biogas and fermentation time**

This can be achieved by creating stable set temperature conditions for fermentation and, most importantly, ensuring high-quality mixing of biomass, which on the one hand should not disrupt the symbiosis of acetogenic and methanogenic bacteria, and on the other hand should not allow stratification of biomass in the reactor into mineral sediment and floating organic layer.

### 6.4. Kinetics of organic mass fermentation in biogas plants

Since the decomposition of organic matter is caused by the development of microorganisms, the growth of which is described by kinetic equations, and also considering that the rate of decomposition of organic matter during biogas fermentation is proportional to the amount of non-decomposed organic matter that can still be decomposed, the kinetic equation of anaerobic fermentation of organic biomass in differential form will have the form:

$$\frac{dM}{d\tau} = -k(M - M^*), \qquad (6.24)$$

where $M$ – content of organic matter of biomass that has not decomposed at the current time of biogas fermentation, kg; $M^*$ – content of organic matter of biomass that does not decompose during biogas fermentation, kg; $k$ – parameter of the biogas fermentation process, which characterizes its rate, days$^{-1}$; $\tau$ – biogas fermentation time, days.

After performing mathematical transformations and integration of the

differential equation within the content of organic matter from the initial value to the current value, we obtain a one-parameter equation of the anaerobic fermentation process, which determines the content of organic matter that has not decomposed at the current time:

$$M = M^* + (M_0 - M^*)exp(-k\tau), \quad (6.25)$$

where $M_0$ – total content of organic matter biomass at the beginning of biogas fermentation, kg.

At the same time, the amount of organic matter biomass that has decomposed at the current time is:

$$M_0 - M = (M_0 - M^*)[1 - exp(-k\tau)]. \quad (6.26)$$

Having reduced the amount of organic matter decomposed at the current time to the total content of organic matter at the beginning of biogas fermentation, we obtain a formula for determining the level of decomposition of organic matter at the current time:

$$\alpha = \alpha_0[1 - exp(-k\tau)], \quad (6.27)$$

where $\alpha_0 = \frac{M_0 - M^*}{M_0}$ – maximum level of decomposition of organic matter in the process of anaerobic fermentation, rel. un.

Taking into account that the maximum level of decomposition of organic biomass raw materials while long-term exposure during anaerobic fermentation is 45% for the biomass of green grass mass, and 59% for corn silage, the kinetic equation of the anaerobic fermentation process of plant biomass will have the form:

– for the green mass of grass

$$\alpha_{GM} = 0.45[1 - exp(-k_{GM}\tau)]; \quad (6.28)$$

– for corn silage

$$\alpha_{SN} = 0.59[1 - exp(-k_{SM}\tau)]. \quad (6.29)$$

Calculation of the parameter of the anaerobic fermentation process, which characterizes its rate, is carried out on the basis of experimental data using the well-known formula:

$$k = exp\left[N^{-1}\sum_{i=1}^{N} ln\left(ln\frac{\alpha_0}{\alpha_0 - \alpha_i}\right) - \sum_{i=1}^{N} ln\tau_i\right], \quad (6.30)$$

where $N$ – number of measurements; $\alpha_i$ – the actual level of decomposition of organic matter in the process of anaerobic fermentation, rel. un.; $\tau_i$ – actual anaerobic fermentation time, days.

To calculate the speed of the anaerobic fermentation process of green grass biomass and corn silage, it will be used experimental data.

Calculations based on experimental studies have shown that for the anaerobic fermentation process, the decomposition rate of organic matter is: for the green mass of grass – $k_{GM} = 0.095$ days$^{-1}$; for corn silage – $k_{SM} = 0.119$ days$^{-1}$.

Thus, the kinetic equations of the anaerobic fermentation process of grass green mass biomass and corn silage will have the following form:

– for the green mass of grass

$$\alpha_{GM} = 0.45[1 - exp(-0.095\tau)]; \quad (6.31)$$

– for corn silage

$$\alpha_{SM} = 0.59[1 - exp(-0.119\tau)]. \quad (6.32)$$

The kinetic equations (6.31, 6.32) are shown graphically in fig. 6.10.

Thus, the speed of the anaerobic fermentation process of corn silage is a quarter higher than the speed of the anaerobic fermentation process of green grass biomass.

It is obvious that the number of loaded portions of biomass in the biogas reactor will be:

$$n = \frac{\tau_F}{\tau_L}, \tag{6.33}$$

where $n$ – the number of downloaded portions of the biomass in the biogas reactor, un.; $\tau_F$ – fermentation time (total residence time of biomass in the reactor), days; $\tau_L$ – frequency of biogas reactor loading, days.

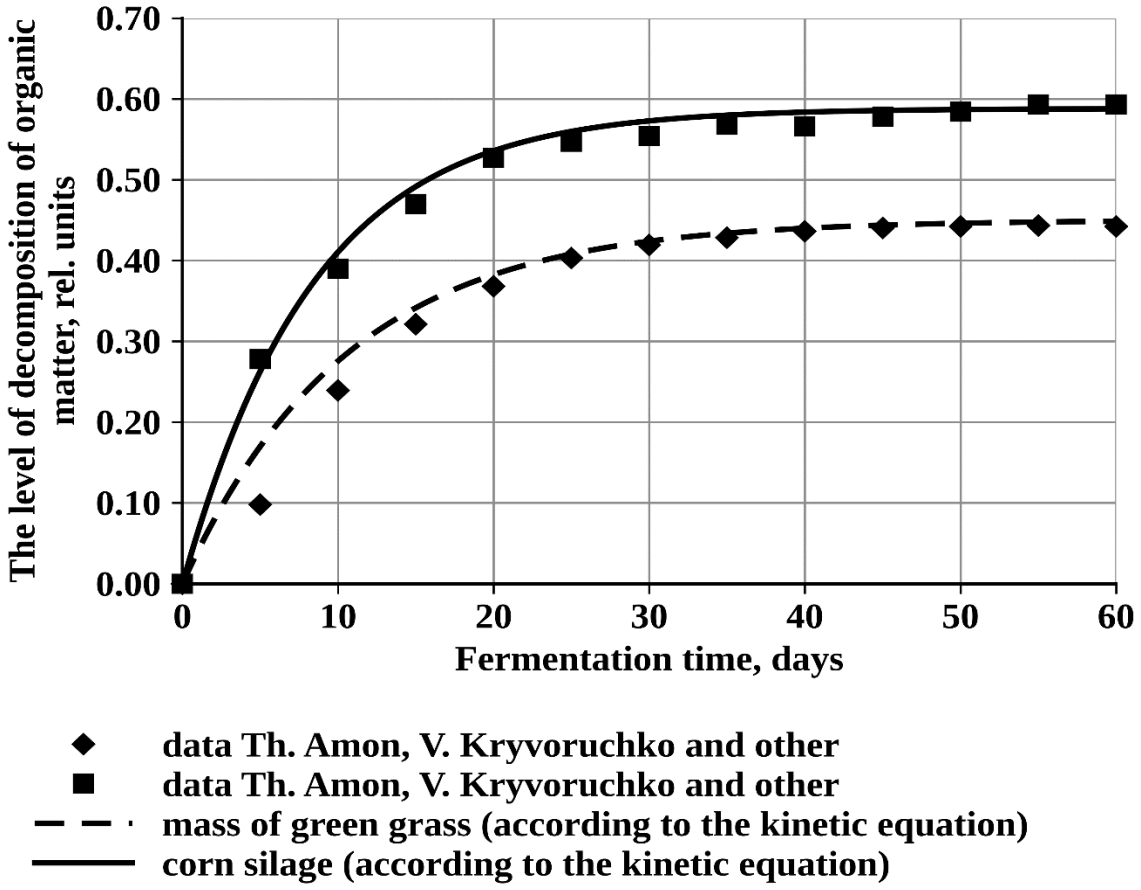


**Fig. 6.10. Kinetics of the process of biogas fermentation of organic raw materials**

Obviously, the fermentation time can be determined by the following ratio:

$$\tau_F = \frac{V_R}{V_{DL}}, \tag{6.34}$$

where $V_R$ – the working volume of the biogas reactor, m$^3$; $V_{DL}$ – the volume of daily load in the biogas reactor, m$^3$/days.

In the case of an ideal situation where each portion of the loaded substrate is not mixed with the previous portions (reactor in the form of connected containers containing one downloaded portion of the substrate), as shown in fig. 6.11, the residence time of each loaded portion in the reactor at the time before unloading the first loaded portion from the filled reactor will be:

$$\tau_i = \tau_F - \tau_L i, \tag{6.35}$$

where: $i = 0 \ldots n = \frac{\tau_F}{\tau_L}$ – numbering of the loaded biomass portion into the biogas reactor.

Knowing the residence time of each portion of the substrate in the biogas reactor, it is possible to determine the level of decomposition of each individual portion of organic biomass during anaerobic digestion, using exponential dependences (6.27):

$$\alpha_i = \alpha_0\left[1 - exp\left(-k(\tau_F - \tau_L i)\right)\right]. \quad (6.36)$$

Then the integral average level of decomposition of organic biomass during anaerobic digestion will be:

$$\alpha = \frac{1}{n+1}\sum_{i=1}^{n}\alpha_i = \frac{1}{n+1}\sum_{i=1}^{n}\alpha_0\left[1 - exp\left(-k(\tau_F - \tau_L i)\right)\right] = \frac{1}{n+1}\sum_{i=1}^{n}\alpha_0[1 - exp(-k\tau_F)exp(k\tau_L i)] = \alpha_0\left[1 - exp(-k\tau_F)\frac{1}{n+1}\sum_{i=0}^{n}exp(k\tau_L i)\right] = \alpha_0\left[1 - exp(-k\tau_F)\frac{\tau_L}{\tau_F+\tau_L}\sum_{i=0}^{n}exp(k\tau_L i)\right], \quad (6.37)$$

and the integral average rate of organic biomass decomposition during anaerobic digestion will be:

$$\frac{d\alpha}{d\tau} = \frac{1}{n+1}\sum_{i=1}^{n}\alpha_0 k exp\left(-k(\tau_F - \tau_L i)\right) = \frac{1}{n+1}\sum_{i=1}^{n}\alpha_0 k exp(-k\tau_F)exp(k\tau_L i) = \alpha_0 k exp(-k\tau_F)\frac{1}{n+1}\sum_{i=0}^{n}exp(k\tau_L i) = \alpha_0 k exp(-k\tau_F)\frac{\tau_L}{\tau_F+\tau_L}\sum_{i=0}^{n}exp(k\tau_L i). \quad (6.38)$$

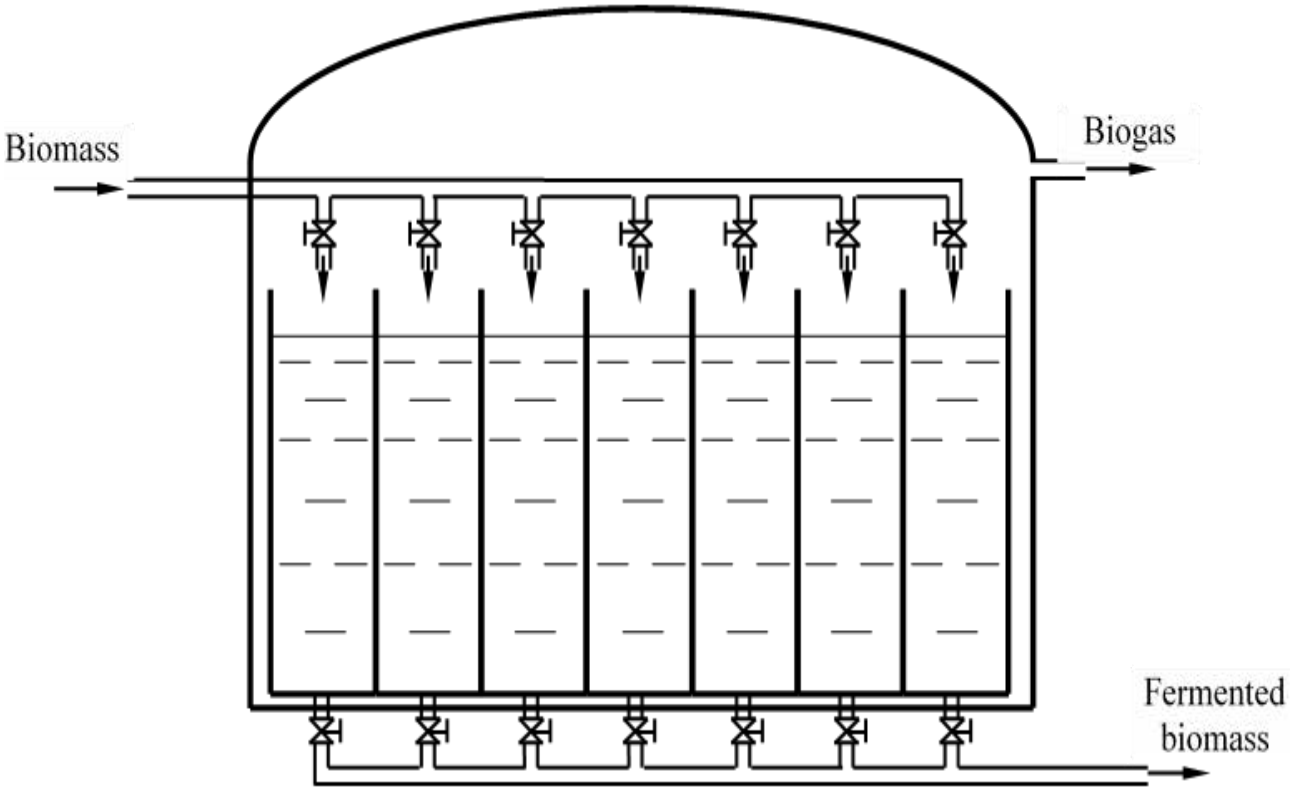


**Fig. 6.11. Idealized scheme of biogas reactor in the form of combined tanks containing one loaded portion of substrate**

The use of integral values of the level and rate of organic biomass decomposition during anaerobic digestion for the data on anaerobic digestion of silage allowed obtaining integral values of the level and rate of decomposition of organic biomass of silage while anaerobic digestion during $\tau_F = 60$ days and with the frequency of

loading of $\tau_L = 5$ days (fig. 6.12 and 6.13).

As shown by calculations, despite the fact that the maximum level of decomposition of the organic mass of silage during anaerobic digestion is 0.59 rel. un., the integral decomposition level of organic biomass under anaerobic digestion at 12 loaded portions of silage biomass into the reactor will be 0.49 rel. un.

The maximum integral decomposition rate of organic biomass during anaerobic digestion of 12 loaded portions of silage biomass into the reactor will be 0.012 rel. un. or 1.2%.

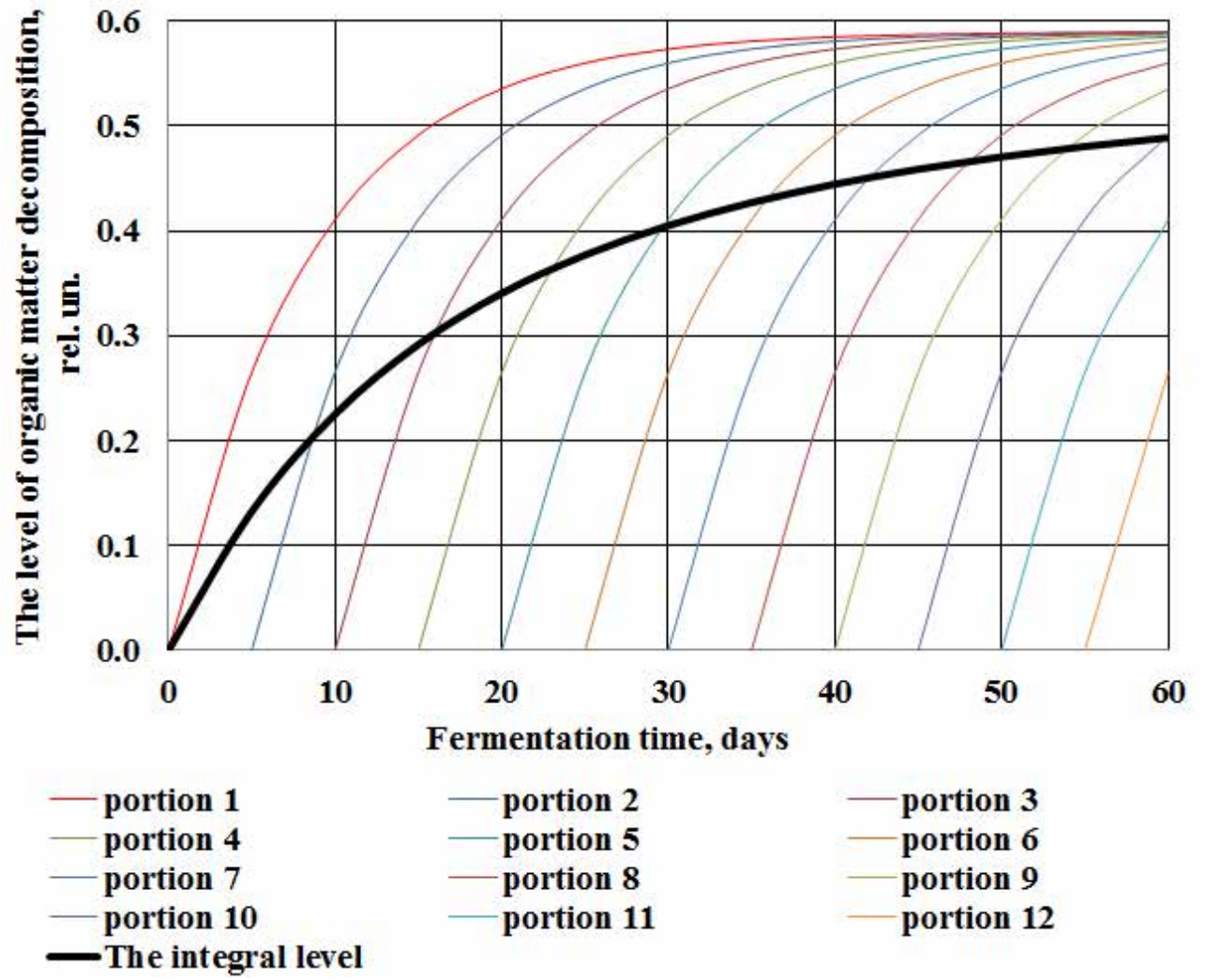


**Fig. 6.12. The integral level of decomposition of the organic biomass of the silage while the anaerobic digestion**

The use of integral values of the level and rate of organic biomass decomposition during anaerobic digestion for data on anaerobic digestion of manure on the basis of experimental data allowed obtaining integral values of the level and rate of decomposition of organic biomass silage while anaerobic digestion during $\tau_F = 21$ days and with the frequency of loading of $\tau_L = 1$ day (fig. 6.14 and 6.15).

It was found that the integral value of the level and rate of organic biomass decomposition during anaerobic digestion of manure depends on the temperature of anaerobic digestion. Thus, at the anaerobic digestion temperature of 37°C the integral

value of the decomposition level of organic biomass of manure was 0.22 rel. un., and the integral value of the decomposition rate of organic biomass was 0.017 rel. un. or 1.7%. At the same time, at the anaerobic digestion temperature of 55°C the integral value of the decomposition level of organic biomass of manure was 0.28 rel. un., and the integral value of the decomposition rate of organic biomass was 0.021 rel. un. or 2.1%, which is almost by a quarter higher than at 37°C.

Thus, the obtained dependences make it possible to analytically determine the integral rate of organic biomass decomposition depending on the fermentation time, the frequency of reactor loading and the fermentation temperature during anaerobic digestion.

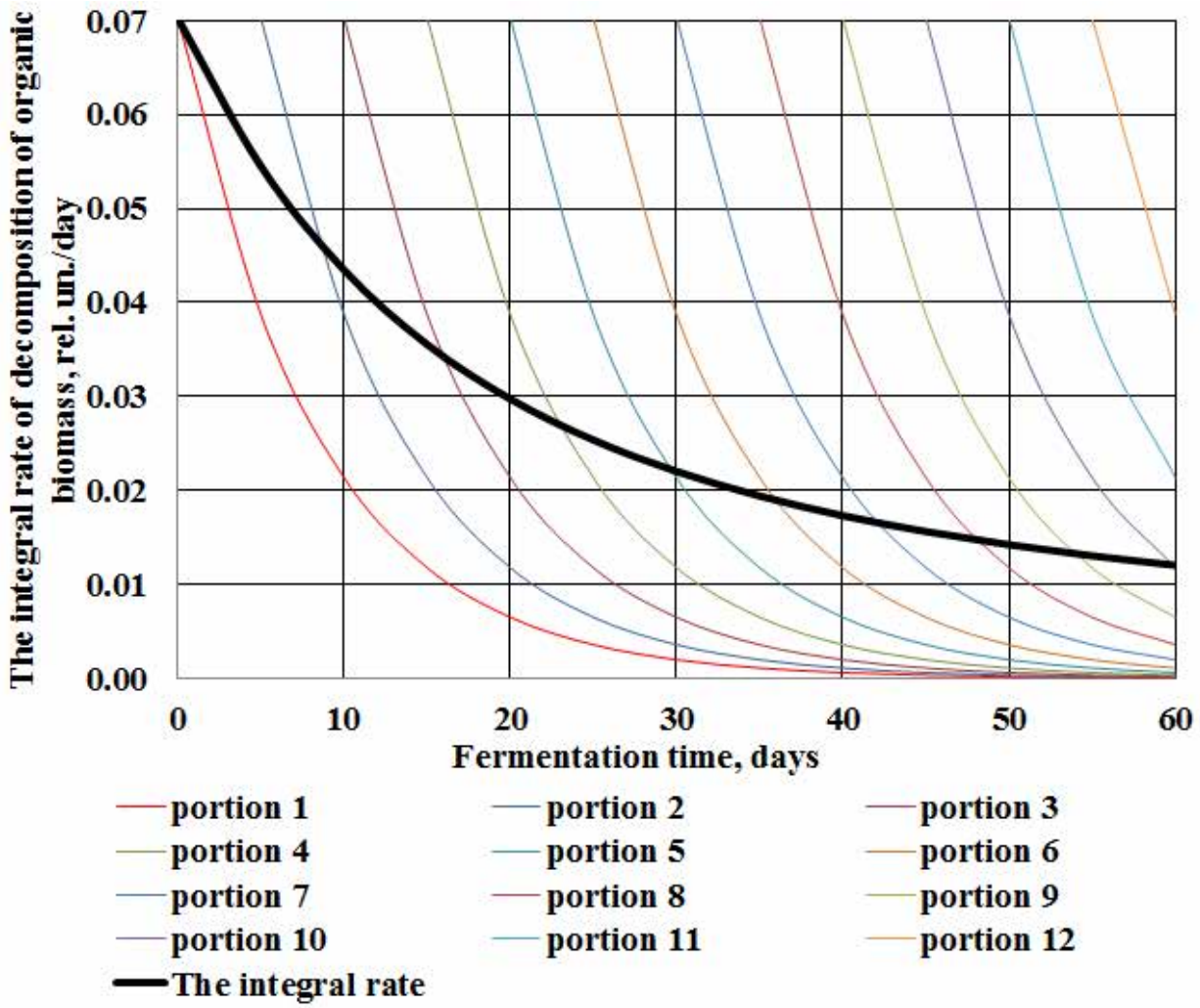


**Fig. 6.13. Integral rate of decomposition of manure organic biomass during anaerobic digestion**

Taking into account the above review of studies of the anaerobic digestion process and theoretical studies, the calculation of the specific yield of biogas during operation of the biogas reactor in the mode of periodic loading and in terms of normal conditions is advisable to carry out in the following sequence.

1. Determination of properties of biomass coming to anaerobic digestion:

1.1. Determination of biomass density, $\rho_{BM}$.

1.2. Determination of biomass moisture content, $W_{BM}$.

1.3. Determination of organic mass content in biomass dry matter, $VS$.

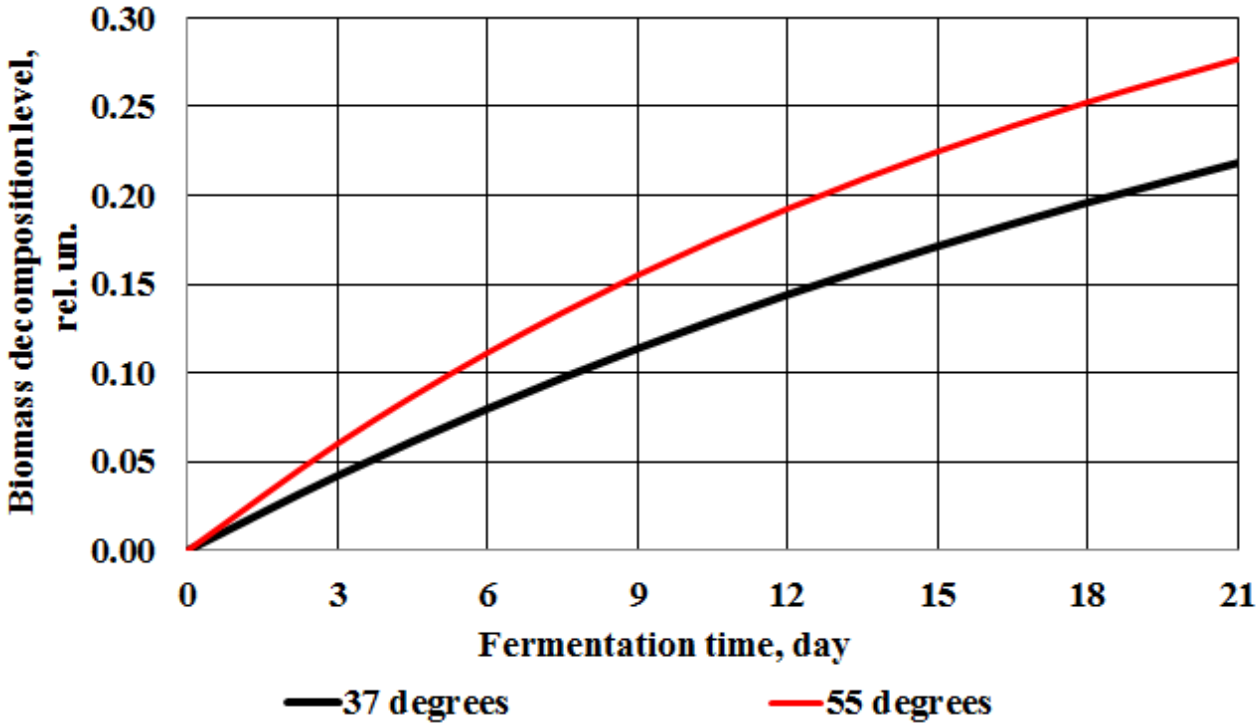


**Fig. 6.14. Integral level of decomposition of organic biomass of manure during anaerobic digestion**

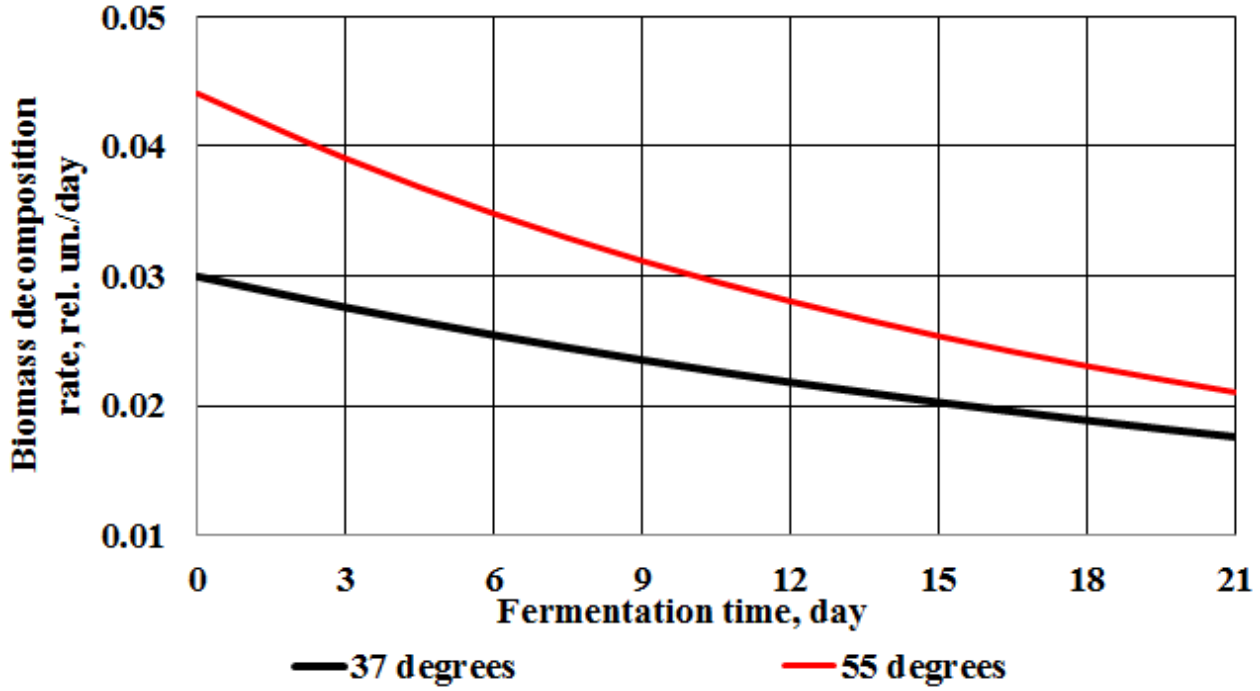


**Fig. 6.15. Integral rate of decomposition of manure organic biomass during anaerobic digestion**

2. Determination of kinetics of biomass anaerobic digestion:

2.1. Determination of the experimental dependence of the level of decomposition of the biomass organic component on the time of anaerobic digestion.

2.2. Determination of the maximum level of decomposition of the biomass organic component depending on the time of anaerobic digestion, $\alpha_0$.

2.3. Determination of biomass organic component decomposition rate, $k$.

2.4. Determination of dependence for approximation of experimental data of change in the level of decomposition of biomass organic component on the time of anaerobic digestion in the form of $\alpha = \alpha_0[1 - exp(-k\tau)]$.

2.5. Determination of biogas yield per unit of decomposed organic mass, $m_{BG}$.

2.6. Determination of volume content of biomethane in biogas, $k_{CH_4}$.

3. Determination of the integral value of the level and rate of organic biomass decomposition during the biomass anaerobic digestion:

3.1. Determination of the fermentation time $\tau_F$, as the ratio of the working volume of the biogas reactor to the volume of the daily load of the biogas reactor, the frequency of loading of the biogas reactor $\tau_L$ and the number of loaded portions of biomass in the biogas reactor $n$, as the ratio of the fermentation time (total residence time of biomass in the reactor) to the frequency of loading of the biogas reactor.

3.2. Determination of the integral value of the level of decomposition of the organic biomass depending on the time of digestion, frequency of substrate and temperature of fermentation during anaerobic digestion.

3.3. Determination of the integral value of the decomposition rate of organic biomass depending on the fermentation time, the frequency of reactor loading and the fermentation temperature during anaerobic fermentation.

4. Determination of specific indicators of anaerobic digestion of biomass:

4.1. Determination of specific biogas yield from the reactor during anaerobic digestion under normal conditions, $V_{BG}$.

4.2. Determination of specific yield of biomethane from the reactor during anaerobic digestion under normal conditions, $V_{CH_4}$.

An algorithm for calculating the specific yield of biogas during operation of the biogas reactor in the mode of periodic loading and in terms of normal conditions ($\rho_{BG}^N = 1.2\ \mathrm{kg}_{BG}/\mathrm{m}_{BG}^3$) is schematically shown in fig. 6.16.

## 6.5. The effect of anaerobic fermentation time on the specific yield of biomethane

It was also established that the current calculated value of the specific yield of biomethane per unit of mass of decomposed DOM can be represented by the following exponential expression:

$$\gamma = \gamma_0[1 - exp\ (-k_{BM}\tau_F)] = 803.936[1 - exp\ (-0.207\tau_F)] \quad (6.39)$$

where γ is the current calculated value of the specific yield of biomethane, ml in terms of normal conditions per gram of decomposed DOM; $\gamma_0$=803.936 ml in terms of normal conditions per gram of decomposed DOM – the maximum value of biomethane yield; $k_{BM}$=0.207 ml in terms of normal conditions per gram of decomposed DOM per day – the rate of change in the specific yield of biomethane; $\tau_F$ – time of anaerobic fermentation, days.

The plot of values of the specific biomethane yield per unit of mass of

decomposed DOM for each repetition, the average value of specific biomethane yield, and the calculated value of specific biomethane yield are shown in fig.6.17.

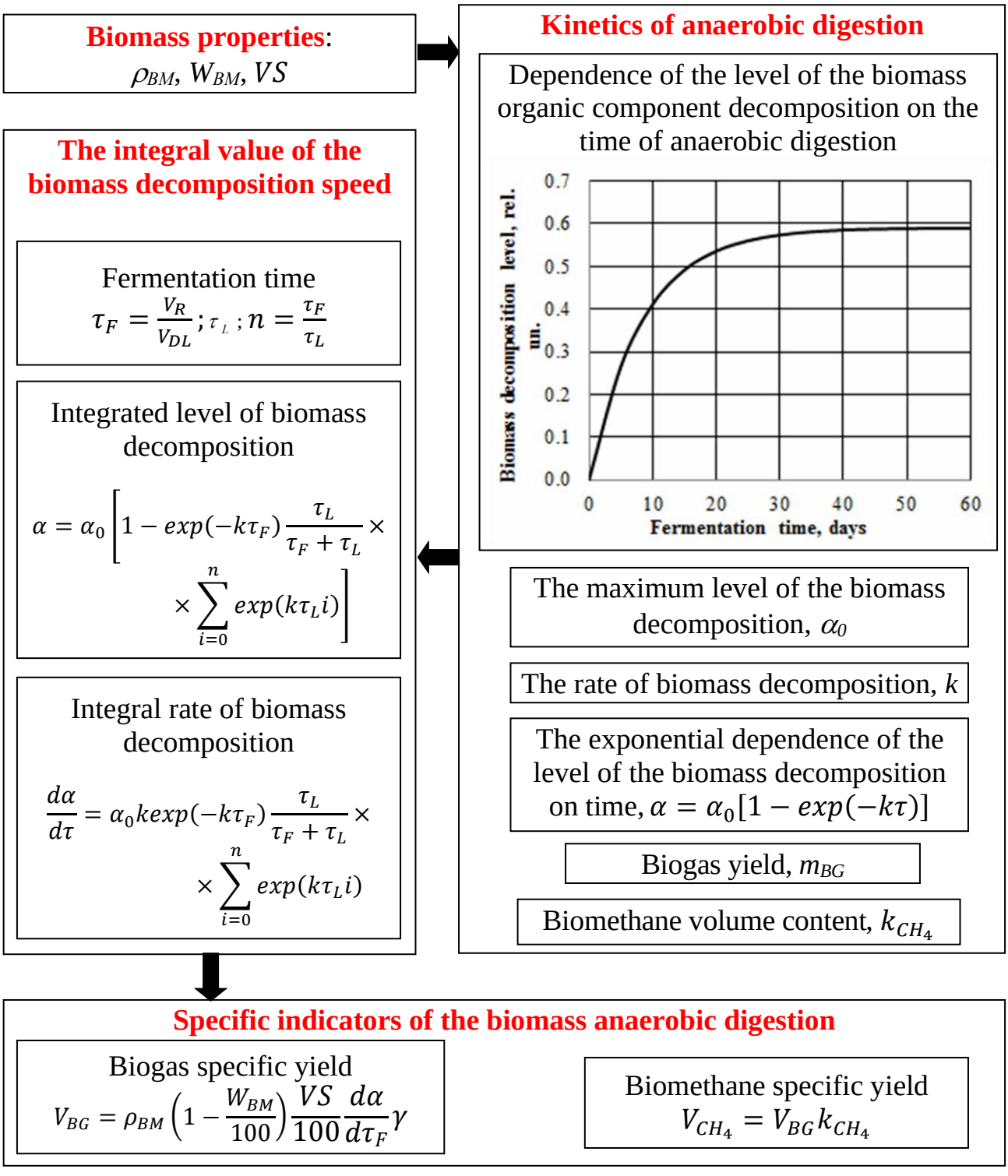


**Fig. 6.16. Algorithm of calculation of specific output of biogas during the operation of biogas reactor in the mode of periodic loading**

Under the conditions of anaerobic fermentation, there are several portions of sediment in the biogas reactor, which are at different stages of the level of decomposition of organic matter and, accordingly, the specific yield of biomethane. In this case, the determination of the specific yield of biomethane per unit mass of decomposed organic

waste can be carried out on the basis of the calculated value of the integrated specific yield of biomethane based on (6.39):

$$\gamma = \gamma_0 \left[ 1 - exp\,(-k_{BM}\tau_F) \frac{\tau_L}{\tau_F + \tau_L} \sum_{i=0}^{n=\frac{\tau_F}{\tau_L}} exp\,(k_{BM}\tau_L i) \right] =$$

$$= 803.936 \left[ 1 - exp(-0.207\tau_F) \frac{\tau_L}{\tau_F+\tau_L} \sum_{i=0}^{n=\frac{\tau_F}{\tau_L}} exp\,(0.207\tau_L i) \right] \qquad (6.40)$$

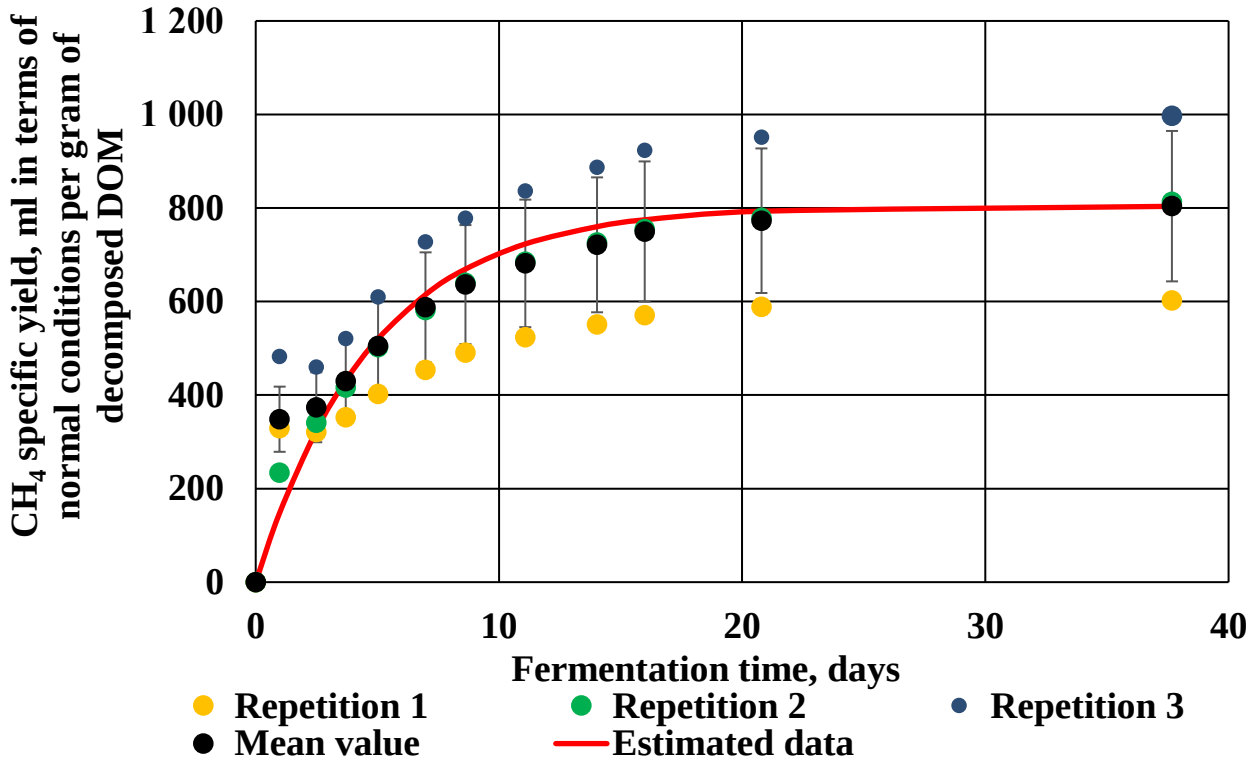


**Fig. 6.17. Experimental dependence of the specific yield of biomethane per unit mass of decomposed dry organic raw materials on fermentation time**

The results of determining the integrated level of specific yield of biomethane under the conditions of anaerobic fermentation, when there are several portions of sediment in the biogas reactor, according to expression (6.40), are shown in fig. 6.18.

These results are necessary for calculating the specific yield of biomethane per unit of sediment biomass in the reactor.

The specific yield of biomethane per unit volume of biomass in the reactor depends on the content of organic mass in the reactor and is determined by the rate of decomposition of the organic biomass in the sediment and the specific yield of biomethane from the unit of decomposed organic biomass. This can be formalized as follows:

$$\eta = \rho \left(1 - \frac{W}{100}\right) \frac{VS}{100} \frac{d\alpha}{d\tau_F} \gamma \qquad (6.41)$$

where $\eta$ is the specific yield of biomethane per unit volume of biomass in the biogas reactor, m³ (in terms of normal conditions)/m$^3$ day$^{-1}$; $\rho$ – biomass density, t/m$^3$;

$W$ – biomass moisture, %; $VS$ – content of dry organic matter in biomass, %; $\gamma$ – specific yield of biomethane per unit of mass of decomposed DOM, $m^3$ in terms of normal conditions per ton of decomposed DOM.

The calculation of the specific yield of biomethane per unit volume of biomass and the specific yield of biogas per unit of biomass in the biogas reactor according to expression (6.41 fig. 6.19).

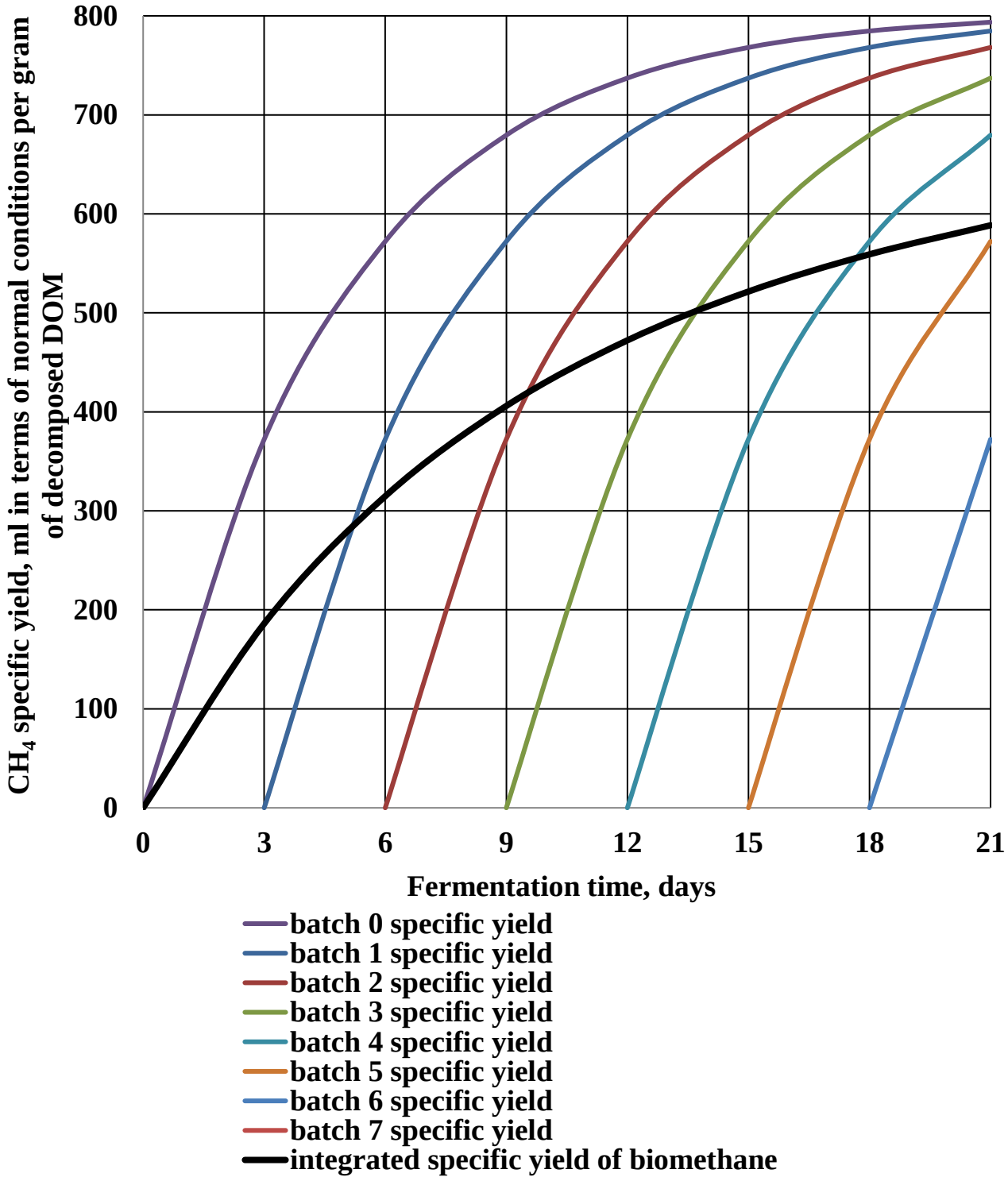


**Fig. 6.18. The specific yield of biomethane during anaerobic fermentation with fermentation time $\tau_F$=21 days, the loading frequency of the biogas reactor $\tau_L$=3 days, and the number of loaded portions in the reactor n=7 units**

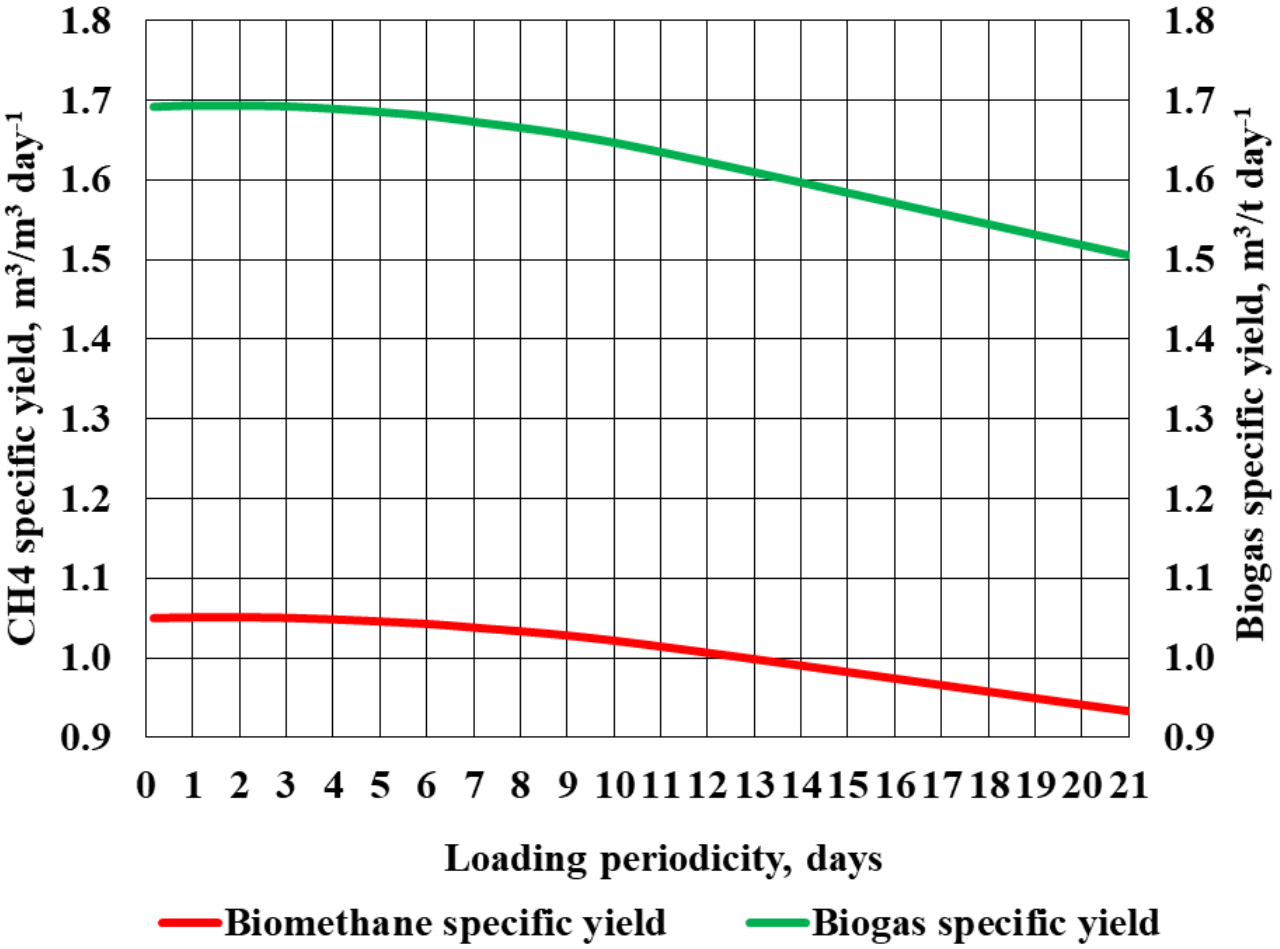


**Fig. 6.19. Specific yield of biomethane per unit volume of biomass and specific yield of biogas per unit of biomass during anaerobic fermentation depending on the periodicity of loading the biogas reactor at fermentation time $\tau_F$=21 days**

These data make it possible to calculate the specific yield of biomethane per unit of biomass in the biogas reactor.

**Questions for self-assessment:**

1. What are the main advantages and disadvantages of modern biogas technologies?
2. What are the main ways to process manure?
3. What should be the ratio of carbon to nitrogen in the compost mixture?
4. What are the methods of anaerobic fermentation?
5. How does the manure removal and processing system affect the volume of manure storage facilities?
6. What is biogas?
7. What process produces biogas?
8. How does biogas produced from biomass differ from natural gas?
9. What raw materials can be used to produce biogas?
10. Describe the current state of biogas technologies.
11. Why is biogas production one of the waste-free technologies?
12. What are the two main types of raw material preparation and fermentation

used in biogas technologies?

13. Describe the microbiological basis of the biogas production process.

14. How many groups of bacteria are involved in the production of biogas? Name them.

15. Give a classification of methane-forming bacteria by temperature regime.

16. What are the main design elements of solid-phase biogas plants?

17. What are the main indicators of solid-phase fermentation in existing bioreactors?

18. What are the main design elements of liquid-phase biogas plants?

19. What are the main disadvantages of liquid-phase biogas reactors?

20. Describe the first and second stages of anaerobic digestion of biomass.

21. What is the mass yield of methane and carbon dioxide during anaerobic fermentation of 1 kg of organic matter?

22. What is the main direction of intensifying the process of liquid-phase fermentation of manure biomass?

23. What limits should be the moisture content of biomass when using liquid-phase anaerobic digestion?

24. What is the reason for the upper limit of biomass moisture when using liquid-phase anaerobic digestion?

25. What are the main types of mixers used for mixing biomass in liquid-phase anaerobic digestion?

26. What is the yield of biogas that can be obtained from 1 ton of biomass during liquid-phase anaerobic digestion?

27. What is the specific yield of biogas in modern liquid-phase biogas plants?

28. What is the maximum level of decomposition of organic biomass during liquid-phase anaerobic digestion?

29. What is the most appropriate frequency of loading a biogas reactor and how can this be justified?

## References:


1. Abbasi T., Tauseef S. M., Abbasi S. A. Biogas Energy. New York : Springer, 2012. 169 p.

2. Amon Th., Kryvoruchko V., Amon B., Zollitsch W., Mayer K., Buga S., Amid A. Biogaserzeugung aus Mais – Einfluss der Inhaltsstoffe auf das spezifische Methanbildungsvermögen von früh- bis spätreifen Maissorten. *Bericht über die 54. Tagung 2003 der Vereinigung der Pflanzenzüchter und Saatgutkaufleute Österreichs*, BAL Gumpenstein, 25–27 November 2003. Gumpenstein : Bundesanstalt für alpenländische Landwirtschaft, 2003. P. 59–68.

3. Baader W., Dohne E., Brenndörfer M. Biogas in Theorie und Praxis. Behandlung organischer Reststoffe aus der Landwirtschaft durch Methangärung. Darmstadt : KTBL, 1978. 134 p.

4. Biogas based on renewable raw materials. Comparative analysis of sixty-one biogas plants in Germany / B. Gemmeke, C. Rieger, P. Weiland et al. Gülzow : FNR, 2010. 118 p.

5. Biogas Guide. From receipt to use. 5th ed. Gülzow : FNR, 2012. 213 p.

6. Eder B., Schulz H. Biogas-Praxis : Grundlagen, Planung, Anlagenbau, Beispiele, Wirtschaftlichkeit. 4th ed. Staufen bei Freiburg : Ökobuch, 2007. 238 p.

7. Golub G. A. Agro-industrial production of edible mushrooms. Mechanical and technological basis. Kyiv : Agrarian Science, 2007. 332 p.

8. Golub G. A., Dubrovina O. V. Biomethane formation in biogas installations. *The 8th International Research and Development Conference of Central and Eastern European Institutes of Agricultural Engineering* : proceedings. Poznan ; Puszczykowo, 2013. P. 55–58.

9. Golub G. A., Dubrovina O. V., Ruban B. O., Voitenko V. O. Technical support for biogas production. *Collection of scientific works of Vinnytsia National Agrarian University. Series: Technical Sciences*. 2012. Iss. 10. P. 17–19.

10. Golub G. A., Kukharets S. M. Gas autonomy. *The Ukrainian Farmer*. 2016. No. 3. P. 181–182.

11. Golub G. A., Kukharets S. M., Zavadska O. A., Marus O. A. Determination of the rate of organic biomass decomposition in biogas reactors with periodic loading. *International Journal of Renewable Energy Research*. 2019. Vol. 9, No. 4. P. 1741–1750.

12. Golub G. A., Lukyanets S. V. Experience of biogas production and use in the Republic of Poland. *Ekonomika APK*. 2011. No. 11. P. 157–160.

13. Golub G. A., Voitenko V. O., Ruban B. O., Yermolenko V. Modern trends in the development of biogas plants. *Machinery and technologies of agro-industrial complex*. 2012. No. 2 (29). P. 18–21.

14. Golub G. A., Yaremenko O., Kucheruk P., Marus O. A., Tsyvenkova N. M., Nadykto V., Chuba V. V., Yarosh Y. D. Defining indicators for the anaerobic fermentation process of aquaculture wastewater sediments. *Eastern-European Journal of Enterprise Technologies*. 2024. Vol. 6/8 (132) : Energy-saving technologies and equipment. P. 66–78.

15. Golub G. A., Yaremenko O., Marus O. A., Tsyvenkova N. M., Chetveryk H. Sedimentation properties of aquaculture wastewater sludge during the cultivation of clarias gariepinus. *Vidnovluvana Energetika*. 2025. No. 1 (80). P. 148–158.

16. Handreichung. Biogasgewinnung und -nutzung / Institut für Energetik und Umwelt gGmbH, Bundesforschungsanstalt für Landwirtschaft, Kuratorium für Technik und Bauwesen in der Landwirtschaft. Gülzow : FNR, 2006.

17. Kudrya S. O. Non-traditional and renewable energy sources : textbook. Kyiv : National Technical University of Ukraine “Kyiv Polytechnic Institute”, 2012. 495 p.

18. Kukharets S. M. Production of biomethane in agriculture. *AgroOne*. 2016. No. 3 (5). P. 24–25.

19. Manure removal, treatment, preparation and use systems : VNTP-APK 09.06. Official publication. Kyiv : Ministry of Agrarian Policy of Ukraine, 2006. 100 p.

20. Marus O. A., Golub G. A. Analysis of reactor designs for solid-phase fermentation. *Scientific Bulletin of the National University of Life and Environmental Sciences of Ukraine. Series: Machinery and energy of agro-industrial complex*. 2016. Iss. 241. P. 380–387.

# 7. USE OF BIOGAS AND BIOMETHANE

**Lecture Plan:**

**7.1. Energy parameters and design of a biogas plant with a rotating reactor 155**
**7.2. Technological process of obtaining biogas using a biogas plant with a rotating bioreactor 159**
**7.3. Obtaining thermal energy based on biogas 161**
**7.4. Cost of biomethane production in agricultural production 165**
**7.5. Biomethane production. Biogas purification and enrichment 169**
**7.6. Cogeneration plants 175**
**7.7. Technical and economic assessment of biomethane-based electricity production 178**

## 7.1. Energy parameters and design of a biogas plant with a rotating reactor

Mixing with biogas is possible if the dry matter content in biogas is below 5 %. Mechanical mixing is difficult when the raw material contains more than 10% of dry matter. Therefore, it was developed a modular biogas plant, the scheme of which is shown in fig. 7.1.

The design of the developed modular biogas plant considers fundamentally new technical solutions in the mixing system of the reacting substrate in a methane reactor. They consist in using a change in the direction of action of gravitational forces affecting the movement of organic and mineral fractions of biomass that fill the inner body. The body of the bioreactor is made in the form of a horizontal cylinder with a diametrically placed partition, which rotates around a horizontal axis, resting on oppositely placed axial trunnions. The reactor of the biogas plant is filled with inoculated biomass and rotates in the liquid, which is located in the outer housing. This design creates a lifting force for the rotating bioreactor, unloading the support trunnions, which reduces the friction forces in them and, accordingly, reduces the energy that is spent on rotating and mixing the structure loaded with biomass. This design of the bioreactor ensures mixing of the reacting substrate over its entire volume and eliminates the possibility of creating a floating organic part and accumulating submerged mineral sediment.

In order to ensure the rotation of the reactor, it is necessary to apply a torque, the value of which is:

$$M_T = M_{RB} + M_{FE} + M_{FI} + M_L - M_D + J\frac{dw}{dt}, \quad (7.1)$$

where $M_T$ – the torque to ensure reactor rotation, N m; $M_{RB}$ – the moment of bearing units resistance, N m; $M_{FE}$ – the moment of viscous friction of the outer surface of the reactor against the liquid in which the reactor is immersed, N m; $M_{FI}$ – the moment of viscous friction of the inner surface of the reactor against the liquid biomass that is in the reactor, N m; $M_L$ – the torque required to ensure the rise of biomass in the reactor during its rotation, N m; $M_D$ – the moment created by the biomass lowering flows in the reactor during its rotation, N m; $J$ – the moment of inertia of the methane tank relative to the axis of its rotation, kg m$^2$; $\frac{dw}{dt}$ – angular acceleration of reactor

rotation, rad/sec$^2$.

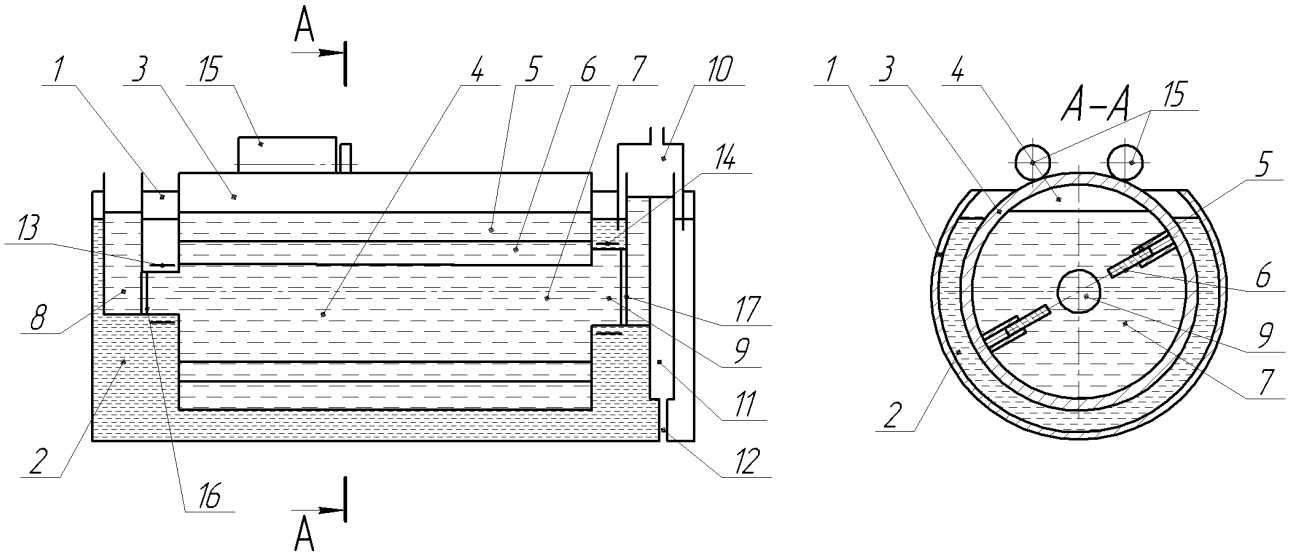


**a**

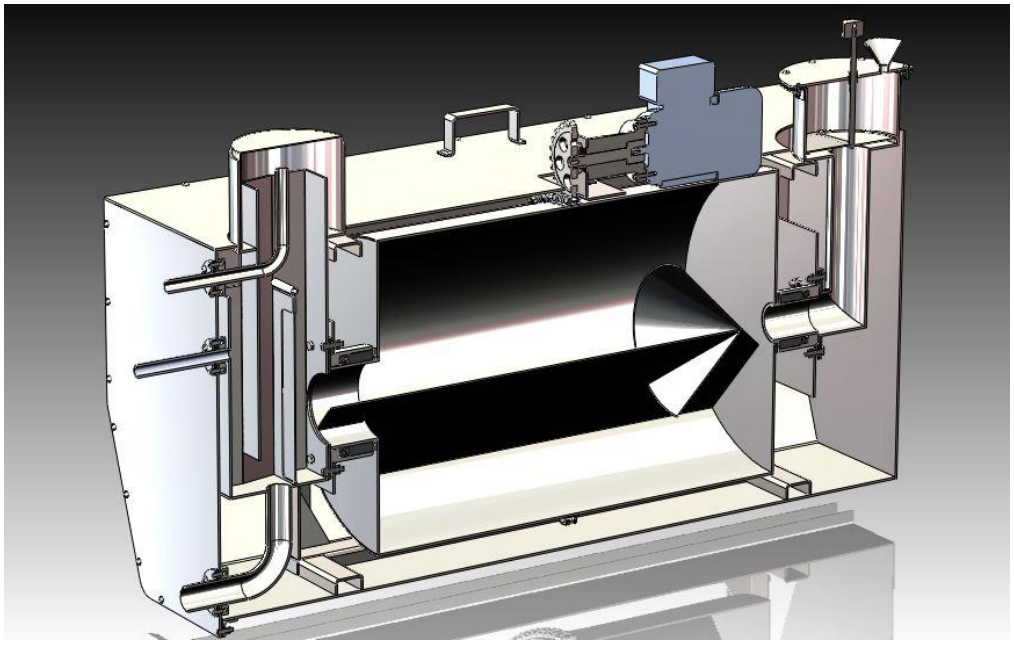

**b**

**1 – horizontal external housing; 2 – liquid; 3 – cylindrical reactor; 4 – fermentation chamber; 5 – partition; 6 – movable plates; 7 – organic mass; 8, 9, 12 – pipes; 10 – gas collector; 11 – discharge chamber; 13, 14 – bearing units; 15-external drive; 16, 17 – block seal**
**a – diagram; b – model**
**Fig. 7.1. Modular biogas plant**

Multiplying each term of equation (7.1) by the angular velocity of rotation of the reactor, we obtain:

$$P_T = P_{RB} + P_{FE} + P_{FI} + P_L - P_D + J\frac{dw}{dt}, \qquad (7.2)$$

where $\omega$ – the angular velocity of rotation of the reactor, rad/sec; $P_T$ – the power to ensure reactor rotation, W; $P_{RB}$ – bearing unit resistance power, W; $P_{FE}$ – the power

of viscous friction of the outer surface of the reactor against the liquid in which the reactor is immersed, W; $P_{FI}$ – the power of viscous friction of the inner surface of the reactor against the liquid biomass that is in the reactor, W; $P_L$ – the power to ensure the lifting of biomass in the reactor during its rotation, W; $P_D$ – the power of biomass lowering flows in the reactor during its rotation, W.

The power consumed by the drive electric motor from the electrical network will thus be:

$$P = \left(P_{RB} + P_{FE} + P_{FI} + P_L - P_D + J\frac{dw}{dt}\right)(\eta_E \eta_D cos\varphi)^{-1}, \qquad (7.3)$$

where $P$ – the power consumed by the drive electric motor from the electrical network, W; $\eta_E$ – the efficiency of the electric motor, rel. units; $\eta_D$ – drive efficiency, rel. units; $cos\varphi$ – the share of active power in the total power of the electric motor, rel. units.

Analysis of this expression, which is essentially the energy balance of the drive of a rotating reactor, allows confirming that the constant value of power consumption will be only when the internal volume of the methane tank is completely filled. Taking into account the specifics of the reactor operation, when part of its volume will always be filled with biogas, it can be concluded that internal fluid flows in the reactor will lead to cyclic shocks that will disrupt the static equilibrium of the rotating reactor and lead to a cyclic change in load. The actual change in the electrical power consumed to drive a 96% filled experimental rotating reactor with an internal volume of 75.55 liters (diameter 0.4 m) and its immersion in liquid by 75% is shown in fig. 7.2.

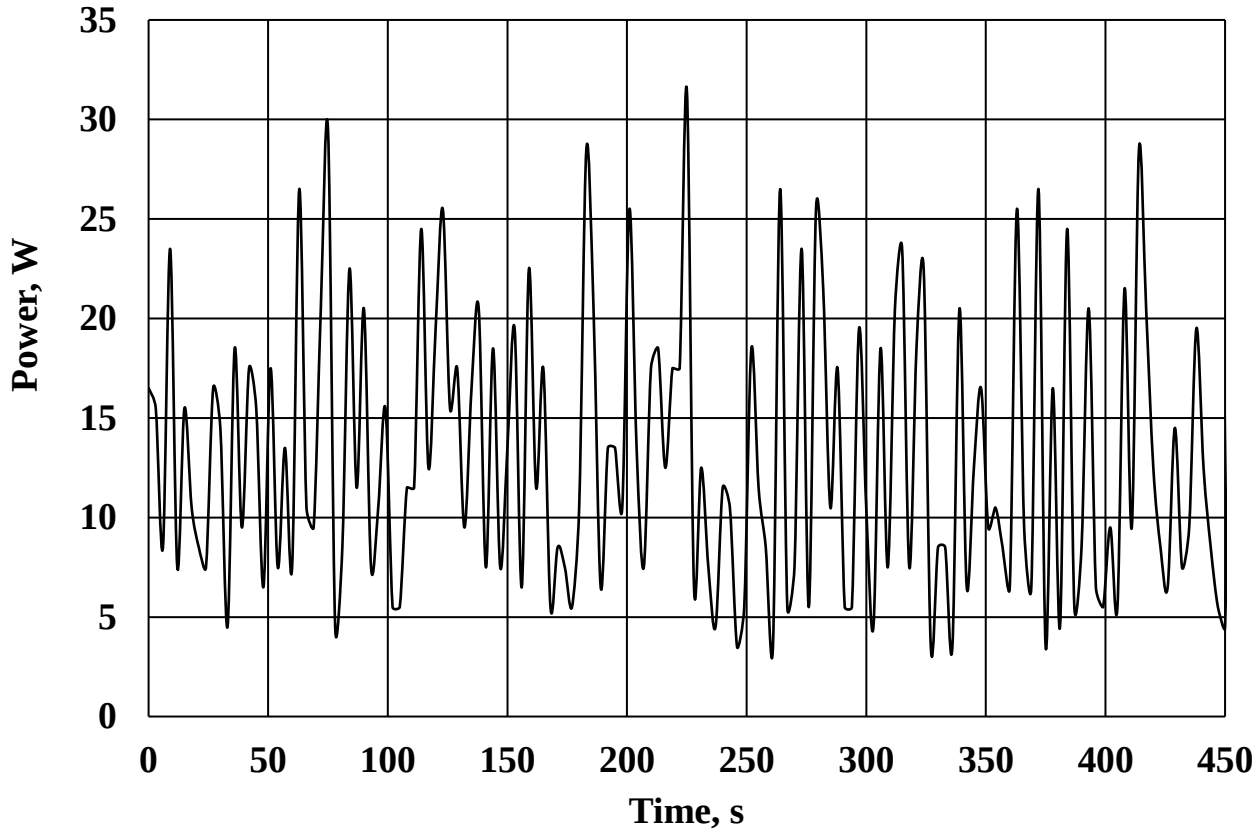


**Fig. 7.2. Change in electrical power consumption during the operation of a rotating reactor**

The average value of the power consumption required to drive a rotating reactor, depending on its immersion coefficient, is shown in fig. 7.3.

The analysis shows that with an increase in the coefficient of immersion of a rotating reactor in a liquid, the average value of power consumption decreases until the minimum value is reached, which is due to a decrease in the cost of resistance in bearing units due to compensation for the weight of the reactor by the Archimedes force. With a further increase in the immersion coefficient of the rotating reactor, the average value of power consumption increases slightly due to an increase in friction in the methane tank bearings, due to overcompensation of the reactor weight by the Archimedes force.

For example, a 96% full rotating reactor with an internal volume of 75.55 liters (diameter 0.4 m) requires a minimum power to drive about 13 W when it is immersed in liquid by an amount of 75 to 77%. At the same time, the specific power of the drive mechanism based on the volume of biomass in the reactor will be 0.179 kW/m$^3$.

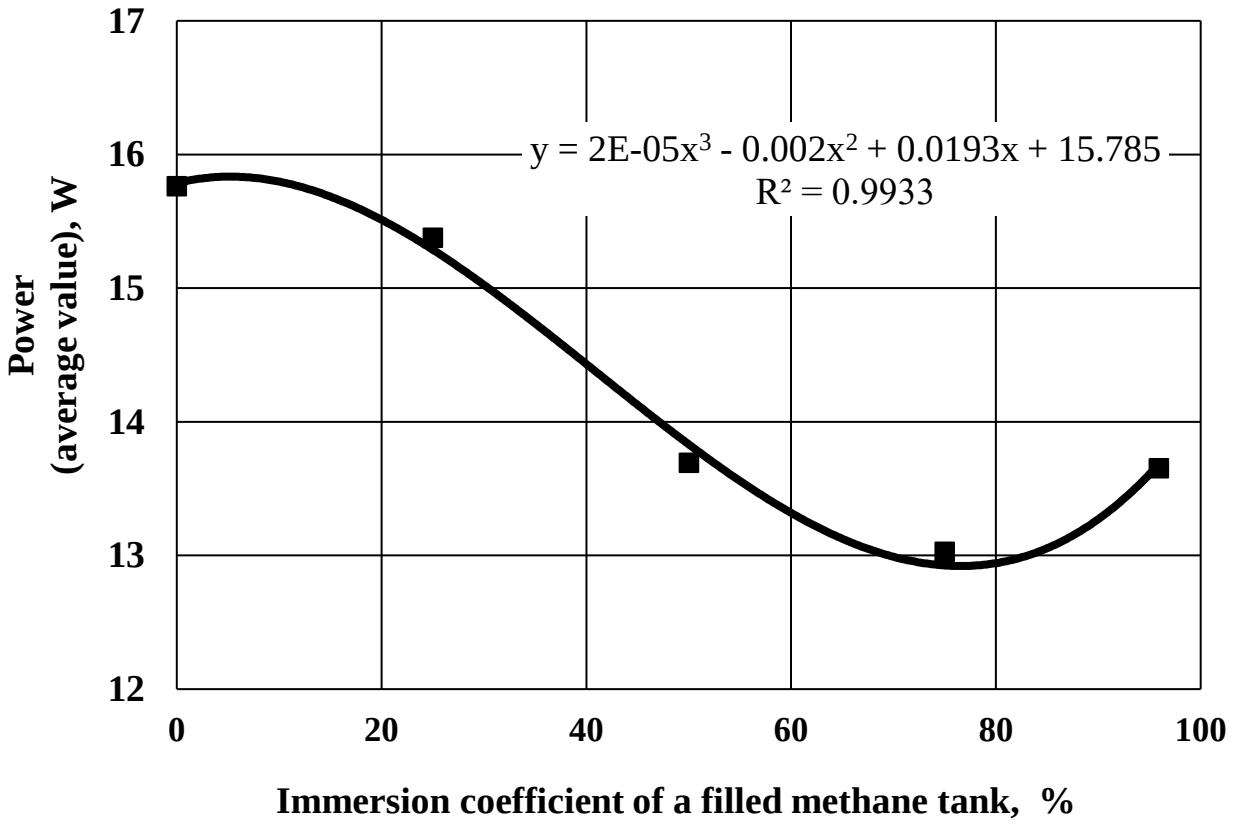


**Fig. 7.3. Influence of the immersion coefficient of a filled rotating methane tank on the power of the drive mechanism**

Depending on the animal husbandry system, manure removal from the premises can be carried out by scraper conveyors or hydraulic flushing. Taking into account the physical, chemical and fractional composition of manure removed from the premises, appropriate technological equipment is used in the storage tanks. These are mixing equipment (mechanical vane agitators, NUI-F-100 type vane pumps), shredders (cutting crushers, SD-50 type shredders) and centrifugal fecal pumps.

Research conducted at the National University of Life and Environmental

sciences of Ukraine allowed establishing the main design parameters of modular methane tanks (table 7.1).

**Table 7.1. Rational design parameters of biogas rotary reactors**

| Working diameter of the reactor, $D$, m | Reactor wall thickness s, m | Outer housing diameter $D$, m | Working length $L$, m | Reactor weight $m_{r.}$, kg | Biomass fill factor $k$ | Volume of loaded biomass (maximum) $V$, $m^3$ | Reactor rotation power $N_{r.}$, W |
|---|---|---|---|---|---|---|---|
| **1** | 0.003 | 1.2 | 4 | 200 | 0.9 | 3 | 299 |
| **2** | 0.005 | 2.4 | 4 | 424 | 0.9 | 11.5 | 1,197 |
| **3** | 0.005 | 3.6 | 4 | 895 | 0.9 | 26.5 | 2,661 |
| **4** | 0.005 | 4.8 | 6 | 1,979 | 0.9 | 71 | 7,114 |

## 7.2. Technological process of obtaining biogas using a biogas plant with a rotating bioreactor

The outer housing diameter consists of the cost of supplying bio-raw materials to the biomass separation device, operating the separator, shredder, and pumping the prepared bio-raw materials to the heater-holder (fig. 7.4).

When carrying out the aerobic stage of raw material preparation, to heat the bio-raw materials to a temperature of 38-55 $^0$C and provide a given acidity, as part of the technological equipment of the aerobic stage of the bio-process, a heater-holder is used, the heat carrier in which is water with a temperature of 75-80$^0$C. Biomass circulation during heat exchange, unloading and inoculation of the biomass prepared for anaerobic digestion is provided by a fecal centrifugal pump, which feeds the finished substrate in small increments to the methane reactor at specified time intervals.

For aerobic preparation of bio-raw materials, a weatherproof heater is used. Optimal in energy terms and accepted for calculations when developing design documentation in the proposed biogas production process is the mesophilic regime (from 38 to 40 °C). Heating of bio-raw materials in an aerobic bioreactor (heaters-holders) is carried out by heat exchange between the heat carrier (water +70°C) and the heat acceptor – a substrate with a temperature range from +5 to +25°C. In addition to heat exchange, the heater-holder processes the formation of organic acids with a pH up to 6.9-7. This process requires periodic mixing of biomass layers and takes place over a period of 1.0 to 1.5 days. The prepared bio-raw materials are pumped to the inoculation chamber with a certain frequency and dose.

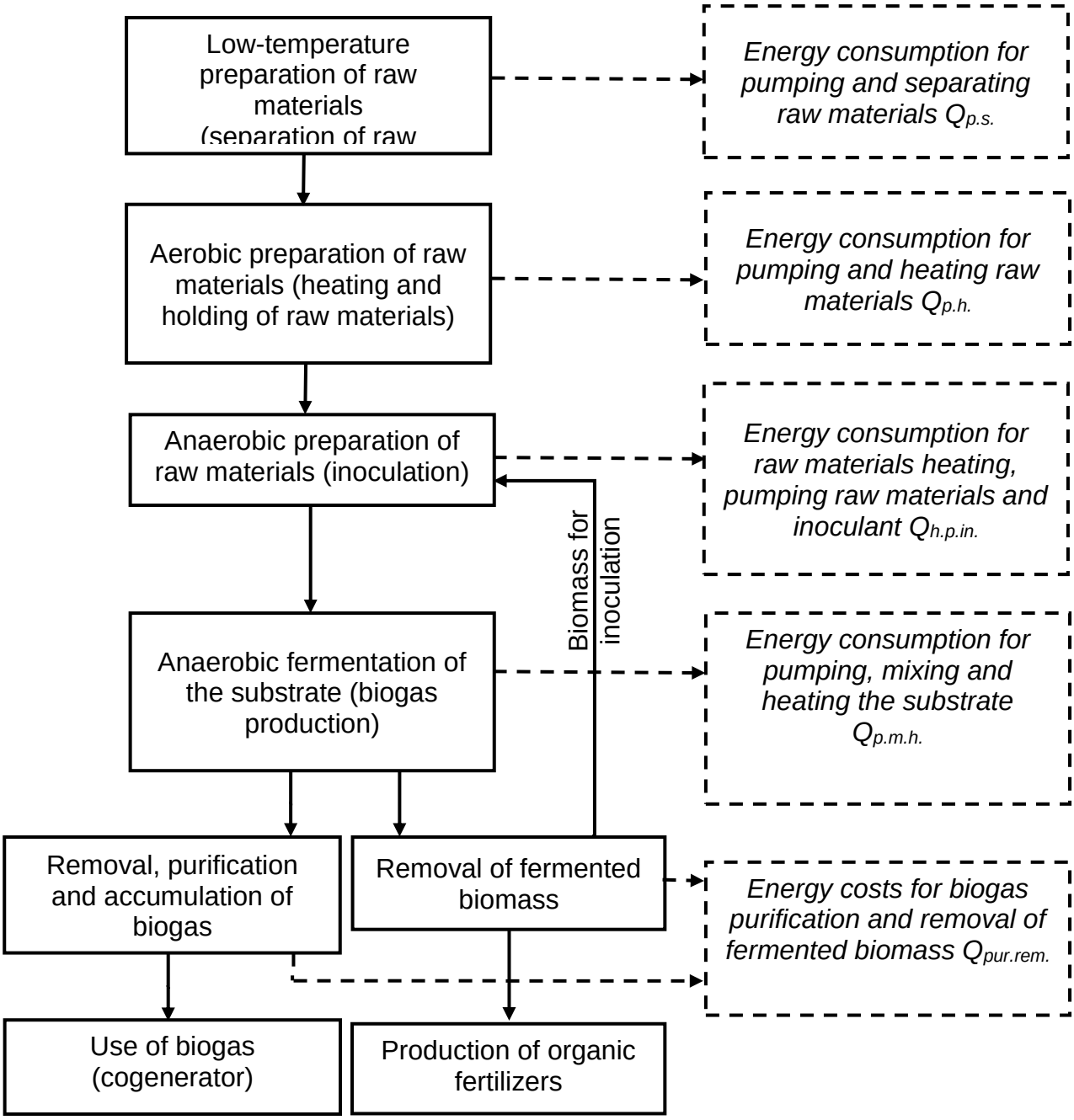


**Fig. 7.4. Flowchart of technological stages of biogas production using modular biogas plants**

In the inoculation chamber, biomass is mixed with methane-forming microorganisms that enter the chamber from a rotating bioreactor. In this chamber, the first stage of methanogenesis takes place with the active release of $CO_2$, the concentration of which in the mixture of formed gases is more than 50%. These gases, being a low-calorie hot mixture, are removed and disposed of by burning separately from the main gas fuel. The substrate obtained as a result of mixing bio-raw materials and inoculant is dosed through a hose and fed to the main chamber-an anaerobic bioreactor, where methane formation processes take place.

Mixing of the substrate in a rotating bioreactor is performed by settling the heavy

mineral component of biomass from the upper part of the reactor into the lower layers, borboting the substrate with biogas, as well as mechanical mixing when the bioreactor is rotated 180°. Horizontal movement of biomass in an anaerobic reactor is ensured by increasing the level of biomass at the beginning of movement in relation to the hydraulic level at the biomass discharge site. This design of the bioreactor ensures mixing of the reacting substrate over its entire volume and eliminates the possibility of creating a floating organic part and submerged mineral sediment.

Biogas is removed from the bioreactor by immersing the gas volume in the reacting substrate when the bioreactor is rotated 180° and the biogas exits in the direction of reduced pressure, which is created in the hydraulic gate under the gas hood. Biogas is stabilized by pressure, weight, and horizontal area of the gas hood. In the future, biogas ($CH_4$ – 72%, $CO_2$ – 25% and others) is purified from $CO_2$ and $H_2S$ and stored in gas tanks. Stabilized by pressure and chemical composition of biogas is supplied for thermal needs.

The fermented biomass is removed from the bioreactor through a water seal and sent to the place of its accumulation. Part of the mass volume that is once discharged from the bioreactor by a screw pump is sent to inoculate fresh biomass.

Thermal stabilization of biomass in an anaerobic bioreactor is achieved due to the water temperature (+42°C) in which the rotating reactor vessel is immersed. The fixed cylindrical housing, which is filled with warm water, has tubular heating elements, the heat carrier in which is water (+75°C). The housing of the biogas plant has external thermal insulation.

### 7.3. Obtaining thermal energy based on biogas

The main method of obtaining thermal energy from biomass is its combustion in gas boilers. The gas boiler is the main element of the heating system, because it is in the boilers that the coolant is heated, as well as automatic maintenance of the set temperature. To choose the best option for generating heat from biogas, you should definitely know the main features of gas boilers, their varieties and main differences. Boilers can be used for individual use (domestic), to provide thermal energy to an individual building or room (fig. 7.5). The power of such boilers mainly lies in the range from 15 to 100 kW. Industrial boilers (fig. 7.6), with a capacity of up to 40 MW or even more, are mostly used for heating a group of premises, enterprises or microdistricts of a city, town, or village.

A gas heating boiler is a unit whose main purpose is to heat the heat carrier for heating the room, as well as to provide hot water supply by burning gaseous fuel. The main fuels for gas boilers are compressed natural gas (methane) and liquefied propane-butane. Gas boilers consist of a gas burner, a heat exchanger, and a smoke extraction system. The boiler design can also include a circulation pump, a safety valve, an expansion tank, an automatic boiler operation monitoring system, as well as a protection and locking system for safe operation of the boiler.

The burner is the main element of the boiler, which directly affects the efficiency of the entire unit. The main task of the burner is to prepare the gas-air mixture and feed it to the combustion chamber. The thermal energy generated as a result of the burner

operation is sent directly to the heat exchanger, where the coolant is heated. Next, the combustion products are removed from the furnace using a smoke extraction system.




**Fig. 7.5. Household gas boiler with a capacity of up to 100 kW**

All gas burners for heating boilers can be divided into the following types. Diffuse burner – when gas is burned, it mixes with air; this process occurs directly during combustion. Injection burner – before feeding into the furnace, natural gas is enriched with air. Enrichment is carried out immediately before the start of the mixture combustion. Pre-complete mixing – the gas burner in this type of boiler mixes air with gas immediately before the outlet. Incomplete pre-mixing – gas atmospheric burners for boilers. The principle of operation is similar to injection equipment, but the difference is that air enrichment occurs partially. Recuperative burner – the scheme of operation of such a unit is based on the use of a recuperator, the main purpose of which is to heat gas and air before mixing. A regenerative burner is almost the same as a regenerative one, but heating occurs using a regenerator. Air and gas enter it and reach the set temperature, after which they enter the furnace. Supercharged burner – air enters the furnace forcibly with the help of a fan, after mixing.



**Fig. 7.6. Industrial gas boiler with a capacity of up to 40 MW**

In addition to the method of supply and options for mixing gas with air, there is a division of burners according to their main purpose. Domestic gas burners for boilers have relatively little power, while industrial gas burners (fig. 7.7) have a significant heat output.

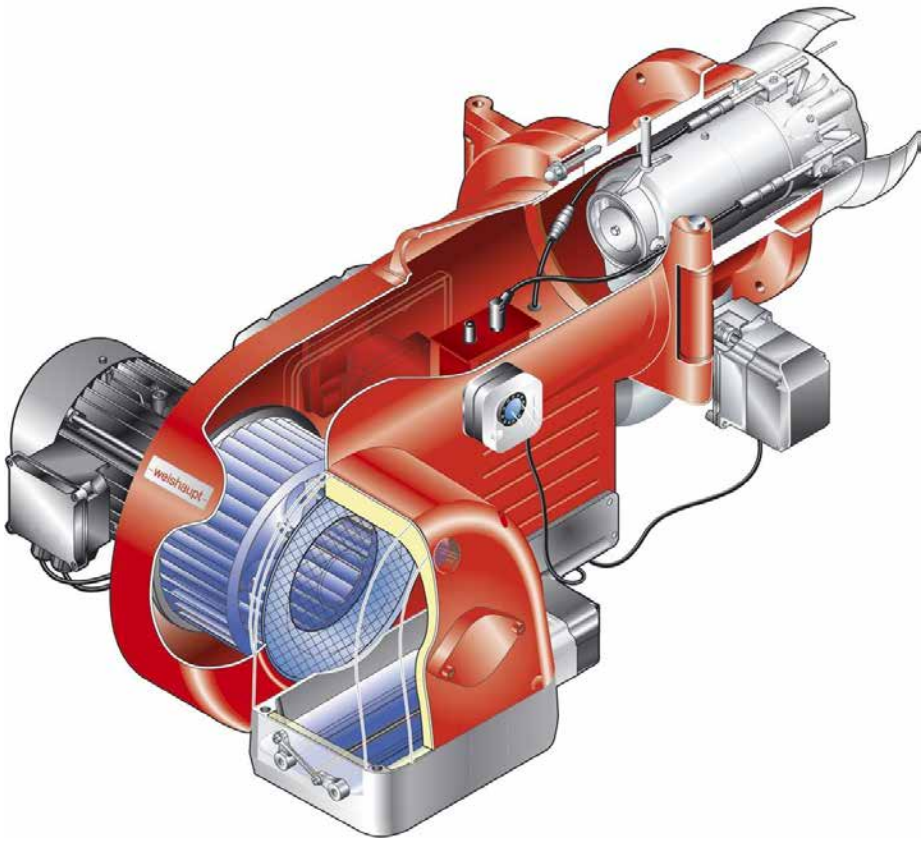


**Fig. 7.7. Industrial gas boiler burner**

Compared to other gases (table 7.2), biogas requires less air to ignite. For complete combustion of 1 m3 of biogas, about 5.7 $m^3$ of air is needed, while for butane – 30.9 $m^3$ and for propane – 23.8 $m^3$. Consequently, conventional gas burners and appliances require more nozzles with an increased cross-section for the passage of biogas. In addition, it should be taken into account that switching burners to biogas leads to lower levels of heat transfer. Some practical measures for modifying burners include: increasing the cross-section of the nozzles by 2-4 times for gas passage, changing the volume of air supply by installing a gas-air mixture regulator. Otherwise, biogas burners are not different from natural gas burners.

**Table 7.2. Comparison of natural gas (methane) and biogas**

| **Component** | **Units of measurement** | **Natural gas** | **Biogas** |
|---|---|---|---|
| **$CH_4$** | % | 85…95 | 55…80 |
| **$CO_2$** | % | <1.0 | 20…45 |
| **$N_2$** | % | 4…12 | – |
| **$O_2$** | % | <0.5 | – |
| **$H_2$** | % | - | <1.0 |
| **$H_2S$** | $mg/m^3$ | 50…100 | 500…5000 |
| **Calorific value of combustion** | $MJ/m^3$ | 32…35 | 20…29 |

It is also possible to burn biogas in kitchen stoves, but it is necessary to ensure that the biogas is cleaned of sulfur compounds, such as HsS. Biogas cookers are used for cooking at home without replacing kitchen utensils. In addition, some models can be used in the conditions of public catering enterprises and other economic purposes, for example, heating large volumes of water for agricultural needs.

Biogas plates (fig. 7.8) have an external similarity to stoves running on natural gas and propane-butane. However, they take into account the features of biogas. When gas flows out of the nozzle at high speed, a vacuum is created around the gas jet and air enters the area of this vacuum. This air is mixed in the burner tube with gas; the gas-air mixture enters the burner cup and exits through the nozzles. There the mixture burns. In a household gas stove, the combustible gas is pre-mixed in the optimal proportion with air, so the mixture is already burning. Hence, there are tasks that need to be solved for burning biogas in household stoves. It is necessary to ensure the correct proportion of the gas-air mixture, as well as the gas flow rate, so that the flame burns stably at the outlet of the burner nozzles with the maximum possible efficiency over the entire adjustment range of the burner tap.

It is also possible, after appropriate cleaning, to use biogas in agricultural product dryers (fig. 7.9).

For example, to dry one ton of wheat grain from 19 to 14% humidity, you need

from 70 to 90 kW of thermal energy, that is, you need to burn from 12 to 15 $m^3$ of biogas. Drying one ton of corn with 30 to 14% humidity requires 250 to 300 kW of thermal energy and 42 to 50 $m^3$ of biogas. To dry one ton of sunflower from 13 to 8% humidity, you need from 160 to 180 kW of heat and from 27 to 30 $m^3$ of biogas. In dryers, 1 $m^3$ of biogas replaces 0.6 liters of diesel fuel. The data is valid under the following conditions: ambient temperature + 15°C, relative humidity 65%. The grain temperature is + 15°C, the grain is cleaned of large impurities, the drying process is continuous. Under other hover conditions, the values may differ. Dryers that use biogas are structurally indistinguishable from traditional dryers, except for the installation of a suitable burner.



**Fig. 7.8. Biogas stove burner**

Greenhouses and other agricultural structures and buildings also have significant heat needs. Biogas can also be used for heating them.

In recent years, the supply of biomethane to natural gas networks has been increasing, since they are approximately the same in terms of the ratio of the main components (fig. 7.10). As of 2015, there were about two hundred such installations in Germany. The government of this country has ambitious goals for the annual replacement of 6 billion $m^3$ of natural gas with biomethane by 2020.

### 7.4. Cost of biomethane production in agricultural production

Liquid manure is a resource base for biomethane production in agricultural production. It is well known that the costs for biomethane production in agricultural enterprises include production costs for receiving biomethane minus the excess value in the price of digestate after fermentation in a digester over the price of manure:

$$B_{BM} = V_{BM}C_{BM} = m_{LM}C_{LM} - m_{LM}(1 - k_F)C_{OF} + E_{PBM}, \qquad (7.4)$$

whence the production costs of biomethane production and of electricity production based on biomethane are:

$$C_{BM} = \frac{m_{LM}}{V_{BM}} = [C_{LM} - (1 - k_F)C_{OF}] + E_{BM} =$$
$$= \frac{V_{PB}\rho_{PB}}{V_{BM}}[C_{LM} - (1 - k_F)C_{OF}] + E_{BM} =$$
$$= 365\frac{V_P\rho_{PB}}{V_{BM}\tau_{FT}}[C_{LM} - (1 - k_F)C_{OF}] + E_{BM} =$$
$$= \frac{\rho_{PB}}{k_{BM}\tau_{FT}}[C_{LM} - (1 - k_F)C_{OF}] + E_{BM}, \quad (7.5)$$



**Fig. 7.9. Grain dryer using biogas**

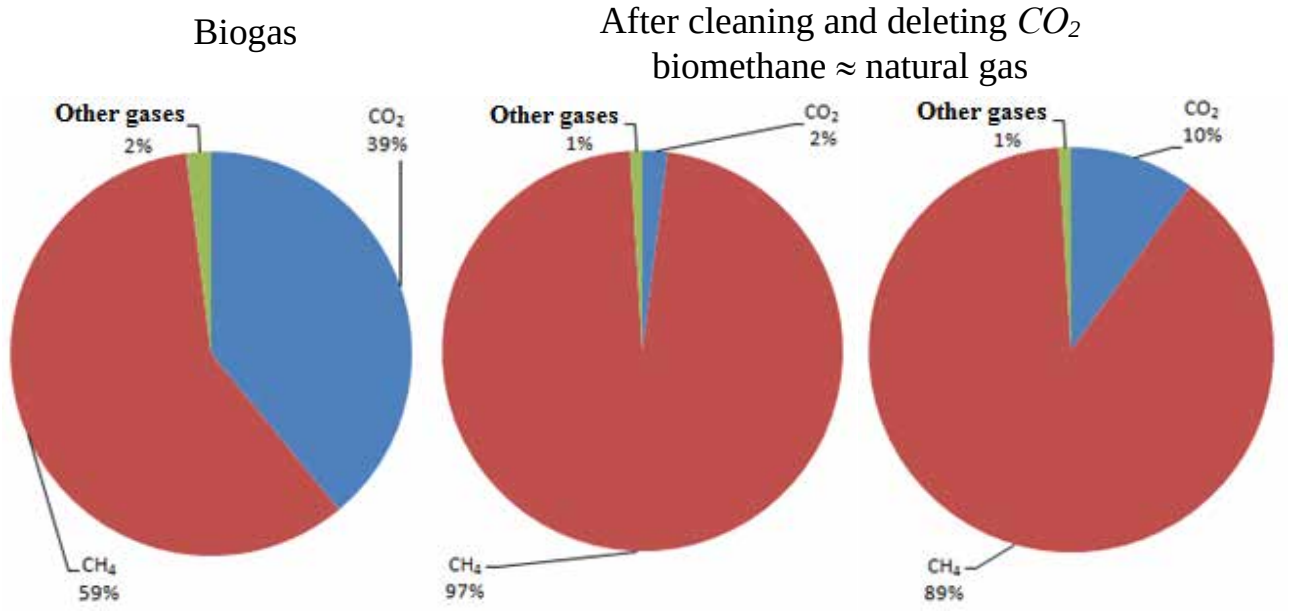


**Fig. 7.10. Ratio of biomethane and natural gas components**

and the excess value in the price of digestate over the price of manure to ensure zero production costs of biomethane will be:

$$(1 - k_F)C_{OF} - C_{LM} = \frac{E_{BM}k_{BM}\tau_{FT}}{\rho_{PB}} \quad (7.6)$$

or taking into account depreciation expense:

$$(1 - k_F)C_{OF} - C_{LM} = \frac{(E_{BM}+A_{BM})k_{BM}\tau_{FT}}{\rho_{PB}} \quad (7.7)$$

where $B_{BM}$ – is general production costs for biomethane production, EUR; $V_{BM}$ – volume of received biomethane, $m^3$; $C_{BM}$ – production costs of biomethane, EUR $m^{-3}$; $m_{LM}$ – mass of liquid manure taking for the fermentation, t; $k_F$ – coefficient the reduction of biomass in the digester during fermentation, relative units; $C_{LM}$ – average price of liquid manure, EUR·$t^{-1}$; $C_{OF}$ – average price of digestate, EUR·$t^{-1}$; $E_{PBM}$ – production expenses for biomethane production excluding the cost of liquid manure and digestate, EUR; $E_{BM}$ – specific production expenses for biomethane production, EUR·$m^{-3}$; $V_{PB}$ – volume of processed biomass in the digester, $m^3$; $\rho_{PB}$ – density of processed biomass in the digester, t·$m^{-3}$; $V_P$ – volume of biomass in the digester, $m^3$; $k_{BM}$ – biomethane output per day from the volume unit of the digester, $m^3$·$m^{-3}$ per day; $\tau_{FT}$ – time of biomass keeping in the reactor during fermentation, days; $A_{BM}$ – depreciation expense for biomethane production, EUR·$m^{-3}$.

Further detailing of expression (7.5), by revealing the structure of specific production expenses for biomethane production, allows us to write down:

$$C_{BM} = \frac{\rho_{PB}}{k_{BM}\tau_{FT}}[C_{LM} - (1 - k_F)C_{OF}] + (1 + k_{TE} + k_{GEE}) \times \\ \times (MAR_{BM} + EL_{BM} + S_{BM}), \quad (7.8)$$

where $k_{TE}$ – coefficient that takes into account the general production expenses, relative units; $k_{GEE}$ – coefficient that takes into account the general economic expenses, relative units; $MAR_{BM}$ – deductions for maintenance and repair of a biogas plant for biomethane production, EUR·$m^{-3}$; $EL_{BM}$ – costs of electricity consumed for biomethane

production, EUR·m$^{-3}$; $S_{BM}$ – wages fund with social charges while biomethane production, EUR·m$^{-3}$.

Given the relative constancy of some components of expression (7.8), we can write:

$$C_{BM} = a_{BM}[C_{LM} - (1 - k_F)C_{OF}] + bE_{BM}, \quad (7.9)$$

where $a_{BM} = \frac{\rho_{PB}}{k_{BM}\tau_{FT}}$ – need in biomass for receiving 1 m$^3$ of biomethane during fermentation, t/m$^3$; $b = 1 + k_{TE} + k_{GEE}$ – coefficient that takes into account the general production and the general economic costs, relative units; $E_{BM} = MAR_{BM} + EL_{BM} + S_{BM}$ – specific production expenses for biomethane production without taking into account the cost of organic fertilizers, EUR/m$^3$.

Technological and economic initial data for the calculation of production costs of biomethane production in the case of anaerobic fermentation of cattle and pig manure are given in table 7.3.

**Table 7.3. Technological and economic initial data for the calculation of the production costs indexes of biomethane production**

| Index | | Symbol | Value |
|---|---|---|---|
| Density of biomass with humidity of 92 % for processing in the digester, t·m$^{-3}$ | | $\rho_{PB}$ | 1.05 |
| Biomethane output per day from the volume unit of the digester, m$^3$·m$^{-3}$ day | min | $k_{BM}$ | 0.75 |
| | max | | 1.2 |
| Time of biomass keeping in the reactor during fermentation, days | | $\tau_{FT}$ | 15 |
| Need in biomass for receiving 1 m3 of biomethane during fermentation, t/m$^3$ | | $\frac{\rho_{PB}}{k_{BM}\tau_{FT}}$ | 0.0933 |
| Coefficient that takes into account the general production costs, relative units | | $k_{TE}$ | 0.05 |
| Coefficient that takes into account the general economic costs, relative units | | $k_{GEE}$ | 0.1 |
| Deductions for maintenance and repair of biogas plant, EUR·m$^{-3}$ | | $MAR_{BM}$ | 0.05 |
| Costs of electricity consumed for production, EUR·m$^{-3}$ | | $EL_{BM}$ | 0.015 |
| Wages fund with social charges for personnel, EUR·m$^{-3}$ | | $S_{BM}$ | 0.011 |

The value of $\frac{\rho_{PB}}{k_{BM}\tau_{FT}}$ is the inverse of the amount of biomethane that can be obtained per unit biomass during anaerobic digestion. This unique value is easily determined on the basis of biogas plant production indicators, and the presence of values of fixed costs of the biogas plant and the difference in prices for liquid manure and digestate allow to predict the profitability of biomethane production.

The data of modeling the production costs of biomethane production depending on the difference between the prices of liquid manure biomass before fermentation in the digester and digestate after fermentation are presented in fig. 7.11.

Thus, the difference between the price of digestate and the price of liquid manure

before fermentation and a requirement in biomass to receive one $m^3$ of biomethane play an important role in estimating production costs of biomethane production.

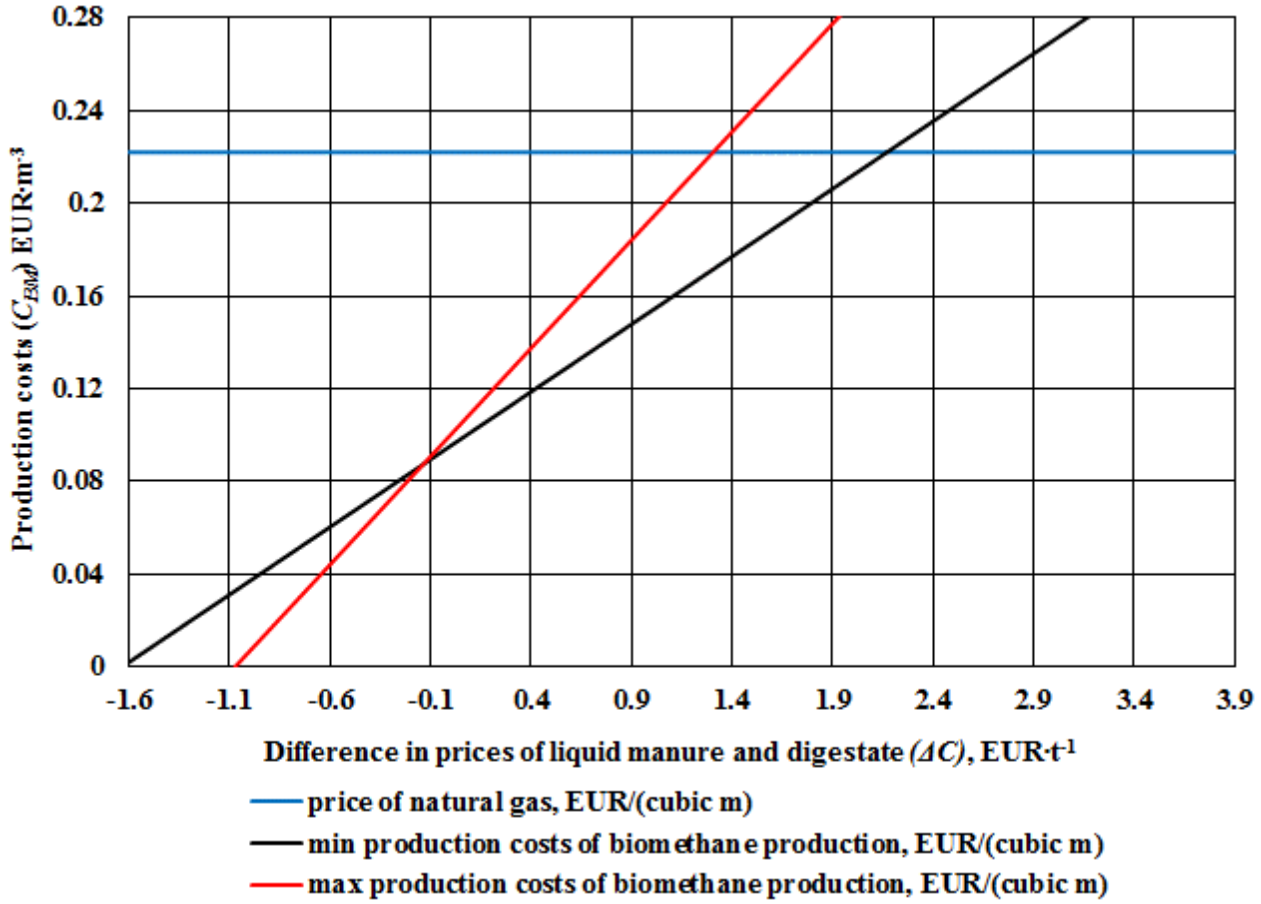


**Fig. 7.11. Calculation of the production costs of biomethane production when price of digestate after fermentation $C_{OF}$=3.4 EUR·$t^{-1}$ and $k_F$=0.04**

The zero-profit of biomethane production will be when the price of digestate will be less than the price of liquid manure before fermentation in the range from 1.3 to 2.1 EUR/t. The suggested methodology may be useful for the economic assessment of biomethane production costs.

### 7.5. Biomethane production. Biogas purification and enrichment

Biogas can be used by decentralized block thermal power plants for electricity and heat supply (cogeneration) or supplied as purified and enriched biogas (biomethane) to an existing gas transmission network (fig. 7.12). In addition, enriched biogas can be used as fuel in automobiles instead of natural gas, in large central cogeneration plants, or to generate heat in high-efficiency gas condensing boilers.

The use of biogas in decentralized energy supply helps to reduce energy imports and improve the reliability of energy supply, in particular, in rural areas. Currently, biomethane is produced in fifteen European countries (fig. 7.13). Biomethane is supplied to the natural gas network in eleven countries (Austria, Czech Republic, Germany, Denmark, Finland, France, Luxembourg, the Netherlands, Norway, Sweden, and the United Kingdom). In twelve European countries (Austria, Czech Republic,

Germany, Denmark, Finland, France, Hungary, Iceland, Italy, Netherlands, Sweden, Great Britain), biomethane is used as a motor fuel. To date, the total number of biomethane stations in European countries has reached 250 units, of which 200 stations supply biomethane to the natural gas network. Biomethane production is developing most dynamically in Germany. Here, the first plant for the production of biomethane began its operation in 2006, and by 2014, the number of biomethane stations had increased to 169 units. At the same time, the total production capacity of biomethane increased to 900 million $m^3$ per year.

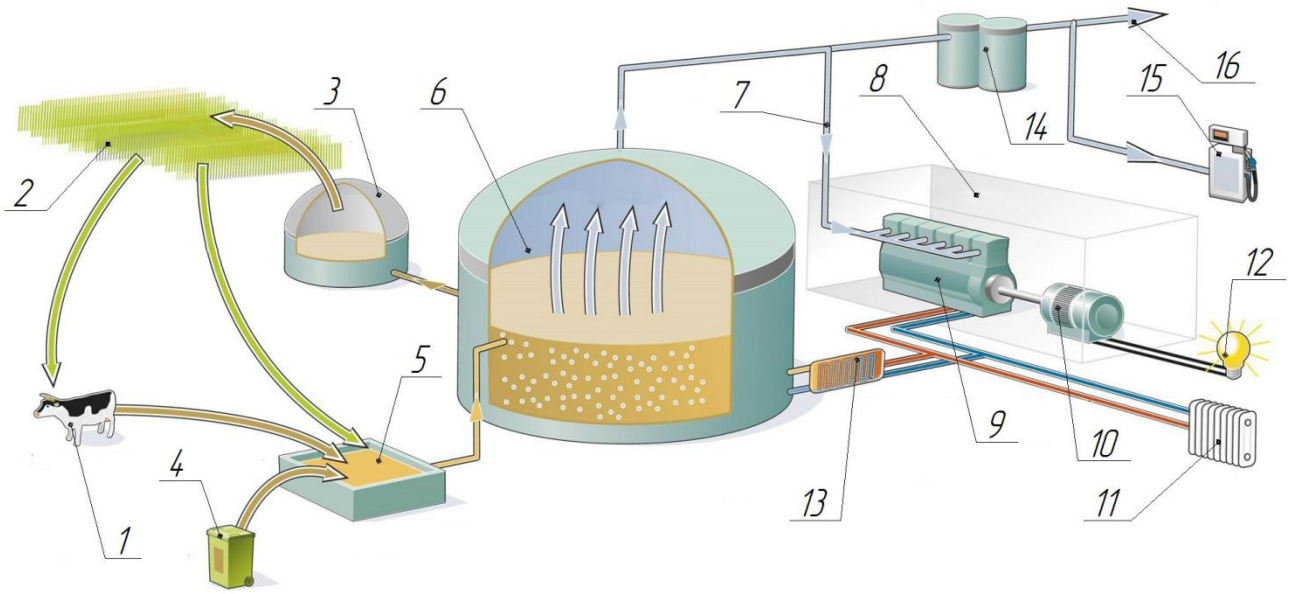


**1 – animals and poultry; 2 – crops; 3 – digestate storage; 4 – organic waste; 5 – substrate storage; 6 – biogas plant equipped with a gas tank; 7 – biogas network; 8 – cogenerator; 9 – internal combustion engine; 10 – electric generator; 11 – thermal energy for heating rooms; 12 – electric energy; 13 – heating of a biogas reactor; 14 – installation for cleaning biogas; 15 – gas station; 16 – transport network of natural biogas**

**Fig. 7.12. Scheme for the use of biogas and biomethane [source: Agentur für Erneuerbare Energien, Germany]**

An important role in the production of biomethane is played by the enrichment and purification of biogas. In order for the produced biogas to be fed to the grid, it is purified in several stages (fig. 7.14).

Methods of purification of biogas from impurities (table 7.4) depend on the methods of its further use. Thus, for example, when using biogas to produce heat in boilers, restrictions apply only to the concentration of $H_2S$ (no more than 1000 million$^{-1}$). There is no need to remove moisture and carbon dioxide in this case. In case of using biogas in kitchen stoves, there are higher requirements for cleaning from $H_2S$. When burning biogas in internal combustion engines, there are also certain requirements for the content of $H_2S$ (no more than 200 million$^{-1}$) and siloxanes, as well as to excessive moisture content (condensation is not allowed). The most stringent requirements for cleaning biogas are put forward when it is supplied to the natural gas network and when it is directly used as motor fuel. In this case, it is necessary to enrich

the biogas to the quality of natural gas.

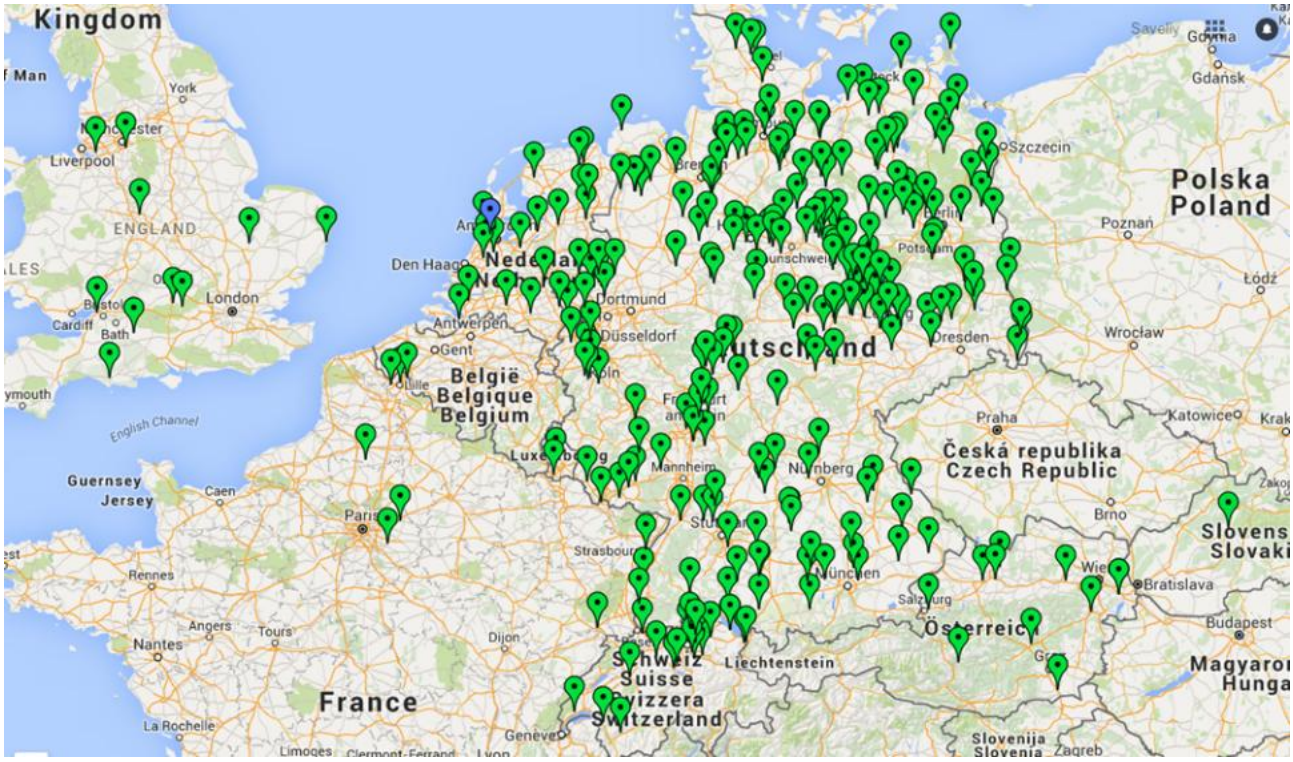


**Fig. 7.13. Location of biomethane production stations in Europe. (source: Google Maps, biogaspartner)**

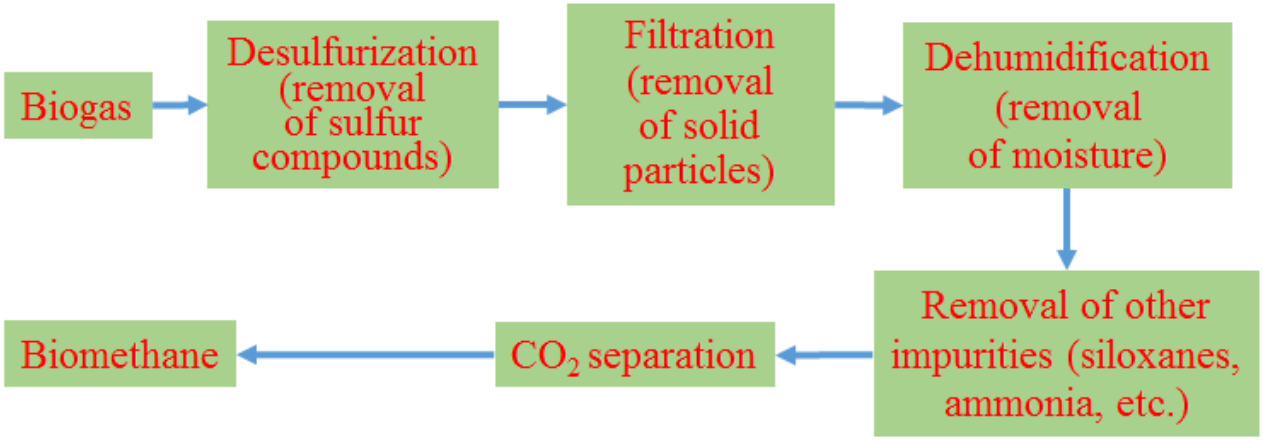


**Fig. 7.14. Stages of biogas purification and enrichment**

A significant part of the impurities is contained in biogas in concentrations much lower than permissible. And even if their concentrations exceed the permissible ones (benzene, toluene, xylene), the impurities do not pose a danger, since they are not in direct contact with people when working with biogas, but decompose when it is burned. Consequently, the environmental danger of using biogas is very small. The exception is $H_2S$, since hydrogen sulfide, even in small doses, is dangerous for humans and leads to rapid wear and corrosion damage to equipment, gas pipes, gas-water heat exchangers, and valves. Therefore, the removal of sulfur is of the highest priority in the cleaning process.

Purification of biogas from hydrogen sulfide is a serious problem. If it is a case

of removing $H_2S$ from biogas without changing the $CO_2$ content or separating the components of biogas with the subsequent use of $CO_2$, then chemical methods of binding $H_2S$ should be used. If the task is to reduce the content of all impurities in biogas, including $CO_2$, then simultaneous absorption of $CO_2$ and $H_2S$ by physical adsorption methods is possible.

Well-known and technically developed methods and technologies for cleaning gases (in particular, biogas) from sulfur compounds using solid chemical absorbers. Iron, zinc, copper, and aluminum oxides are most often used as such absorbers of hydrogen sulfide. One of the simplest and cheapest methods is the absorption of $H_2S$ by iron oxide. In this case, $Fe_2O_3$ reacts with $H_2S$ to form $FeS_3$, which is decomposed by air oxygen to form elemental sulfur.

**Table 7.4. Content of impurities in biogas**

| Name of the compound (impurity) | Formula of the compound (impurity) | Possible concentration, mln.$^{-1}$ | Permissible concentration, mln.$^{-1}$ |
|---|---|---|---|
| **Hydrogen sulfide** | $H_2S$ | 50,000 | 10 |
| **Toluene** | $C_6H_5CH_3$ | 210 | 100 |
| **Xylol** | $C_6H_4(CH_3)_2$ | 120 | 100 |
| **Ethylbenzene** | $C_6H_5C_2H_5$ | 55 | 100 |
| **Tetrachloroethylene** | $Cl_2C\text{-}CCl_2$ | 35 | 35 |
| **Hexane** | $C_6H_{14}$ | 30 | 100 |
| **Isopropylbenzene** | $C_6H_5C_3H_7$ | 30 | 50 |
| **Benzene** | $C_6H_6$ | 25 | 10 |
| **Dichloromethane** | $CH_2C1_2$ | 15 | 200 |
| **Nonan** | $C_9H_{20}$ | 15 | - |
| **Chlorobenzene** | $C_6H_5Cl$ | 12 | 75 |
| **Trichloroethane** | $Cl_2HC\text{-}CH_2Cl$ | 10 | 10 |
| **Dichloroethane** | $CH_3CH_2C1_2$ | 10 | 10 |
| **Dichloroethane** | $ClCH_2CH_2C1_2$ | 8 | 50 |
| **Pentan** | $C_5H_{12}$ | 7 | 600 |
| **Isooctane** | $C_8H_{18}$ | 5 | 300 |
| **Indole** | $C_8H_7N$ | 5 | - |
| **Dichloroethylene** | $C1_2C_2\text{-}CH_2$ | 2 | 10 |
| **Naphthalene** | $C_{10}H_8$ | 0.2 | 10 |
| **Trichloroethylene** | $C1_2C\text{-}CHCl$ | 0.2 | 35 |

In practice, iron oxide applied to wood shavings and sawdust is usually used to expand the surface of interaction of the chemisorbent with biogas. More modern are devices for cleaning gases from $H_2S$ with a liquid absorber. Of the greatest practical interest are liquid adsorption methods, in which a gas mixture is passed through an absorber solution, which, after saturating it with hydrogen sulfide inside the device, is

sent for regeneration.

Biogas from bioreactors and methane tanks has a relative humidity of about 100%, and since it leaves the reactor when bubbling through a layer of liquid, it often contains a large amount of droplet moisture. The use of wet biogas in boiler furnaces and engine combustion chambers negatively affects the operation of these devices, reduces their efficiency, increases the level of harmful emissions, and leads to corrosion of equipment. For further operations on the preparation of biogas, in particular, using cryogenic technologies, the presence of moisture in the biogas is unacceptable. It is recommended to install separators and drop moisture bumpers in the biogas preparation line for use. Their designs are diverse and similar to conventional moisture separators in systems that use any gases, for example, natural gas.

In practice, when preparing large volumes of gas for transportation in pipelines, absorption and adsorption methods are used. Gas dehumidification by absorption is based on the use of special liquid reagents that absorb water from the gas. This happens through direct contact inside a special installation. As reagents that absorb moisture, this method most often uses solutions of diethylene glycol or triethylene glycol. During absorption, the dried gas first interacts with the absorber solution, after which the absorbed gas is first released from it, and then ethylene glycol is heated and sent to regeneration, where the absorbed moisture is removed from it. Then the cycle repeats. The indisputable practical advantages of the absorption method include the fact that it allows removing moisture from the gas mixture containing harmful substances (primarily hydrogen sulfide). In addition, it is easily automated and allows dehumidification to be carried out to an acceptable “dew point” value in most cases (minus $700^0$C).

Another common gas dehumidification technology, the adsorption method, is based on the use of solid moisture absorbers. In this method, moisture absorption is carried out by solid granular substances. Such adsorbents can include, in particular, aluminum oxide, zeolites, and silica gel. Moisture is subsequently removed from the pores of the adsorbents using external action. The adsorption method has a number of advantages. In particular, it allows achieving a much lower “dew point” (minus $90^0$C). However, the choice of this method, as well as a specific adsorbent, strongly depends on the composition of the dried gas, since it may contain components that negatively affect the solid reagents of the installation.

In Europe, there is a distinction between natural gas "H" (High, high-quality gas) and natural gas "L" (Low, low-quality gas). Natural gas "H" consists of 89...98% of methane. The quality of natural gas "L" is slightly lower. The methane content in it is approximately 85%. Other components of natural gas are alkanes (ethane, propane, butane, pentane) and inert gas. Thus, the quality of natural gas may vary depending on the region. Therefore, only when the requirements of the relevant gas transmission network operator for gas quality are met, biogas can be supplied to the general gas network.

Along with removing sulfur and draining biogas, an important step is to separate carbon dioxide in the process of enriching biogas to biomethane (fig. 7.15). At the same time, the share of carbon dioxide ($CO_2$) in biogas can be up to 45%. Due to its physical properties, carbon dioxide affects the calorific value and calorific value of gas, as well

as its density. Special attention should be paid to these indicators when supplying biomethane to the gas transmission network.

To enrich biogas to the quality of natural gas in Europe, wet cleaning methods under constant pressure and adsorption under variable pressure are used. In addition, other technologies are being developed and tested.

During the wet pressure cleaning process, biogas is compressed to about 1 MPa without first removing sulfur and passed through a high-pressure container filled with water. The carbon dioxide ($CO_2$) contained in biogas is absorbed by water. This partially removes hydrogen sulfide ($H_2S$) and ammonia, as well as various impurities and microorganisms. Water vapor in biogas is liquefied after wet cleaning. In this way, you can achieve a $CH_4$ content of more than 96%.



**Fig. 7.15. Biogas puriffication and enrichment plant in Schwandorf, Germany**

In variable pressure adsorption technology, biogas is exposed to variable pressure (up to 1 MPa) after sulfur removal and drying. In this case, carbon dioxide ($CO_2$) is adsorbed by renewable activated carbon. In addition to carbon dioxide, gases contained in impurities are adsorbed. In this way, it is also possible to achieve a $CH_4$ content of up to 96%.

In addition to the above methods, there are also other technologies that can be

used in practice to separate $CO_2$. Amine purification is a process based on chemical absorption. At the same time, carbon dioxide, just as it happens during wet cleaning, is absorbed under the influence of pressure (from 0.1 to 0.5 MPa). In order to remove more $CO_2$ from the biogas, the cleaning liquid is enriched with chemicals. The cleaning fluid used in this process can be restored. At the same time, recovery is energy-intensive and may be associated with high economic costs. This largely depends on the chemicals used.

Membrane separation uses the physical process of selective permeability of the corresponding membrane. Significantly smaller $CO_2$ molecules pass through the membrane micropores faster than larger $CH_4$ molecules. Methane remaining on the high-pressure side of the membrane is collected and can be fed into the gas transmission network. The advantage of this technology is low methane losses during biogas processing. The disadvantage is relatively high-energy costs, since you need to create relatively high pressure.

Cryogenic separation is also used. The boiling point of methane is minus 161.5°C, and carbon dioxide is minus 78.5°C. When the temperature decreases under overpressure conditions, $CO_2$ turns into a liquid state, while methane is still in a gaseous state. At the same time, $CO_2$ can be relatively easily separated from methane. The $CO_2$ released in this way is quite pure and can be a marketable product.

### 7.6. Cogeneration plants

Cogeneration is the combined production of heat and electricity. At a power plant using cogeneration technology, fuel is used to generate two forms of energy – thermal and electric. The prefix "co" in the word cogeneration means the combined production of heat and electricity. Simply put, a cogeneration plant is a thermal power plant. Cogeneration power plants are more efficient than power plants that produce only electric energy. With cogeneration technology, there is a real opportunity to use thermal energy, which usually evaporates into the atmosphere through cooling towers and together with flue gases. When using the cogeneration effect, the total fuel utilization rate increases significantly. The use of cogeneration significantly reduces fuel consumption.

A cogeneration plant consists of a power unit, such as a gas turbine or piston engine, an electric generator, a heat exchanger, and a control system (fig. 7.16). The most widespread installations are small (from 0.5 to 2 MW) and medium (from 30 to 50 MW) electric capacities. When using cogeneration for 1 MW of electric power, the consumer receives from 1 to 2 MW of thermal power in the form of steam and hot water for industrial needs, heating and water supply of domestic facilities.

Cogeneration power plants cover the needs of consumers for electric and cheap thermal energy in excess. Excess thermal energy can be directed to a steam turbine, to maximize power generation, or to absorption and refrigeration machines for cold production, with subsequent implementation in air conditioning systems. This technology has its own definition – trigeneration.

The world's leading manufacturers of cogeneration plants based on piston engines and turbines today are: Alstom, Capstone, Calnetix-Elliott Energy Systems,

Caterpillar, Cummins, Deutz AG, Generac, General Electric, GE Jenbacher, Honeywell, Kawasaki, Kohler, Loganova, MAN B&W, MAN TURBO AG, Mitsubishi Heavy Industries, Rolls-Royce, SDMO, Siemens, Solar Turbines, Turbomach, Vibro Power, Wartsila, Waukesha Engine Division, FG Wilson, Perkins and others.

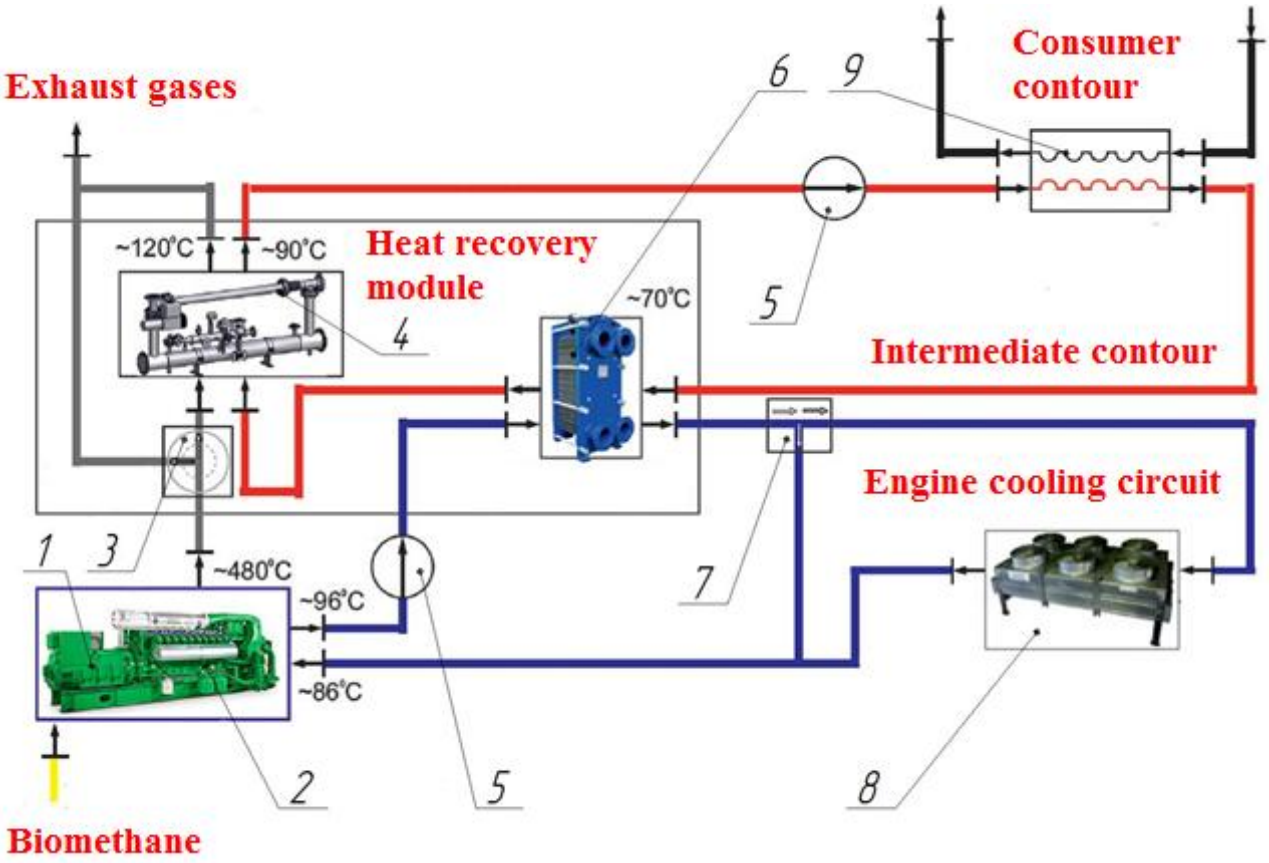


**1 – electric generator, 2 – engine, 3 – bypass, 4 – exhaust gas recovery unit, 5 – pump, 6-engine cooling circuit heat exchanger, 7 – thermostat, 8 – radiator, 9 – heat exchanger of the heat supply system (consumer circuit)**

**Fig. 7.16. Diagram of a cogeneration plant**

There are cogeneration systems based on gas turbine and gas piston installations, microturbines. Diesel engines are less commonly used. Another classification criterion is the type of fuel. Among others, biogas after purification from carbon dioxide and other impurities, which is produced by biogas plants and can serve as an important source of increasing their economic efficiency, is considered particularly promising.

Gas turbine units (fig. 7.17) are capable of providing the widest range of electrical power – from ten to several tens of megawatts. In such installations, the gas flow formed as a result of fuel combustion, when interacting with the turbine blades, creates a torque and rotates the rotor, which, in turn, is connected to the electric generator.

The electrical efficiency (the share of electricity from the total energy of fuel combustion) of systems of this type can reach 39%. Gas turbine units, as a rule, produce twice as much thermal energy as electric energy (while the overall efficiency does not exceed 90 %). Their undoubted advantage is the ability to work on both liquid (diesel fuel, kerosene) and gaseous fuels of various origins, including low-calorie (with a

methane content of less than 30%). High-power units can be used together with steam turbines. In this case, their electrical efficiency reaches 59%. Gas turbine units can be used in many sectors of the national economy, but the main segments of consumption are still the oil and gas production sectors, the metallurgical industry, and energy. In gas turbine installations, the main amount of thermal energy is taken from the exhaust system. The extraction of thermal energy in gas turbine installations is easier than in gas piston installations, since the exhaust gases have a higher temperature.

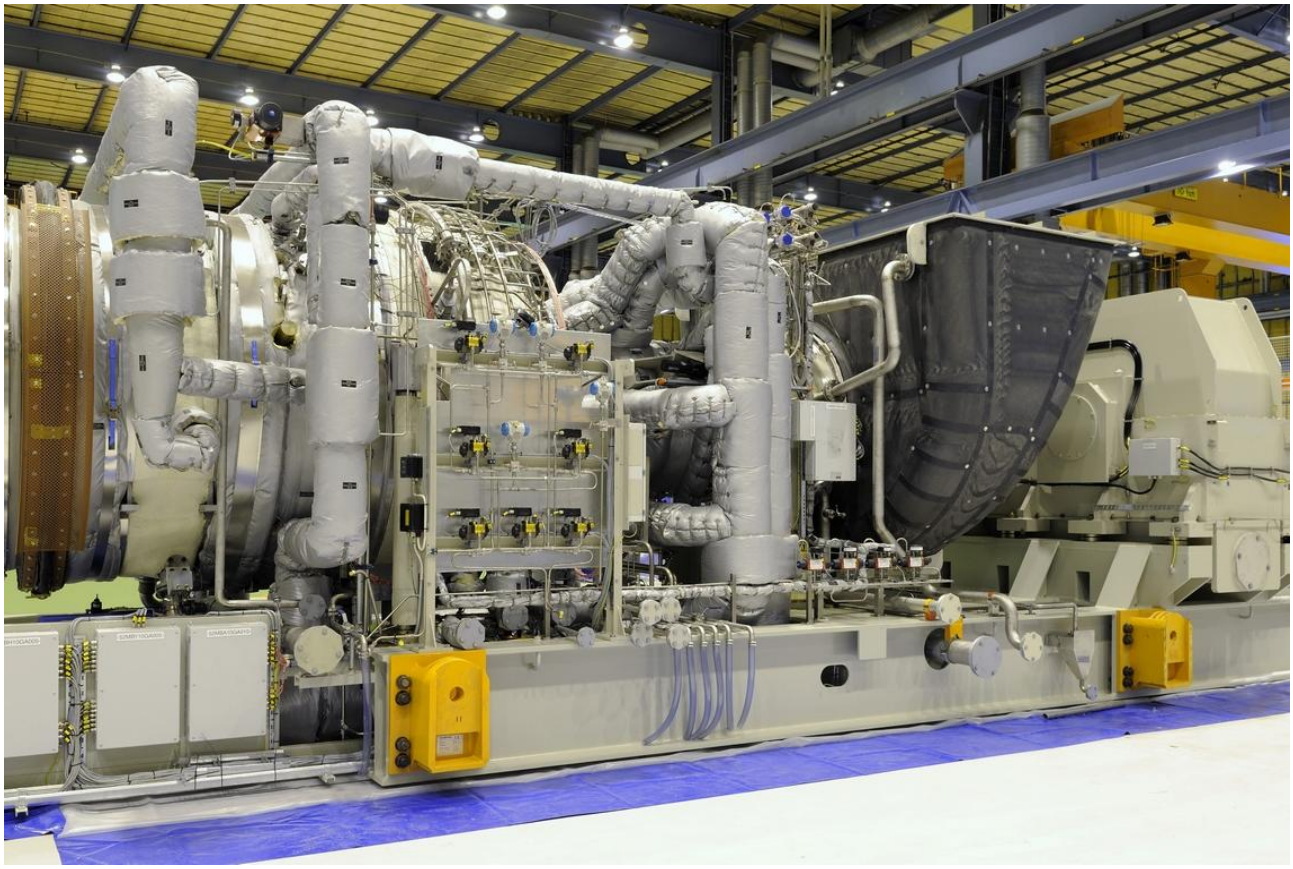

**Fig. 7.17. SGT-800 gas turbine manufactured by Siemens with a capacity of 47 MW**

Microturbine installations (fig. 7.18) operate on the same principle as gas turbines, but have a smaller size and, accordingly, power. Another feature of microturbine-based cogeneration plants is their compact design, which gives them an advantage when implementing cogeneration projects in a limited space, for example, in individual buildings. The entire cogeneration system is compactly located inside the noise-proof housing, only the exhaust system and the heat line are brought out. Electrical efficiency, as a rule, does not exceed35 %, and thermal efficiency is approximately 50%. The maximum power of a single unit is up to 250 kW.

Gas-piston units are powered by internal combustion engines, the fuel for which is gas (fig. 7.19). The electrical efficiency of gas turbine units reaches 40%, which is slightly higher than that of gas turbine units, but the thermal efficiency is lower – 50%. The maximum capacity of such installations is up to 9 MW. In gas-piston power plants, heat is extracted from the oil heat exchanger and from the engine cooling system.

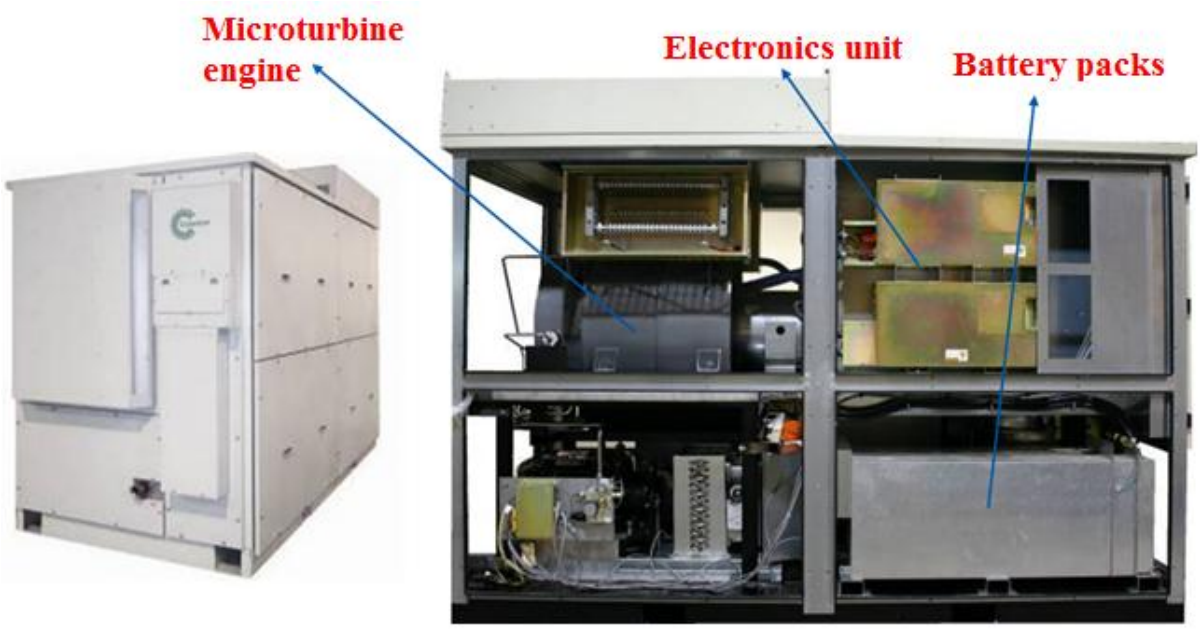


**Fig. 7.18. Capstone C200 micro turbine unit with an electric capacity of 200 kW**

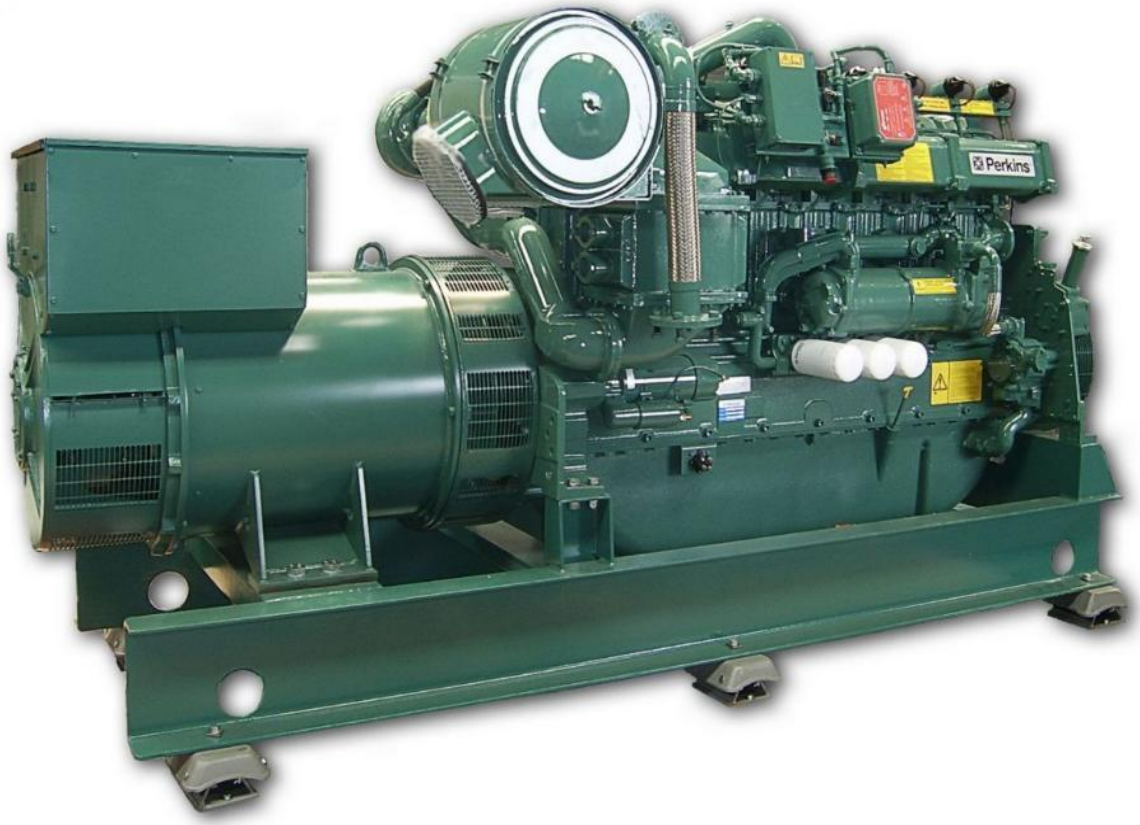


**Fig. 7.19. Perkins TRS1 gas piston unit with an electric capacity of 310 kW**

### 7.7. Technical and economic assessment of biomethane-based electricity production

Liquid manure is also a resource base for biomethane-based electricity production in agricultural production. It is well known that the costs for biomethane-based electricity production includes production costs for receiving electricity minus the excess

value in the price of digestate after fermentation in a digester over the price of manure:

$$B_{EL} = W_{EL}C_{EL} = m_{LM}C_{LM} - m_{LM}(1 - k_F)C_{OF} + E_{PEL}, \quad (7.10)$$

whence the production costs of electricity production based on biomethane are:

$$C_{EL} = \frac{m_{LM}}{W_{EL}} = [C_{LM} - (1 - k_F)C_{OF}] + E_{EL} =$$
$$= \frac{V_{PB}\rho_{PB}}{W_{EL}}[C_{LM} - (1 - k_F)C_{OF}] + E_{EL} =$$
$$= 365\frac{V_P\rho_{PB}}{W_{EL}\tau_{FT}}[C_{LM} - (1 - k_F)C_{OF}] + E_{EL} =$$
$$= 365\frac{3.6V_P\rho_{PB}}{V_{BM}q_{BM}\eta_G\tau_{FT}}[C_{LM} - (1 - k_F)C_{OF}] + E_{EL} =$$
$$= \frac{3.6\rho_{PB}}{k_{BM}q_{BM}\eta_G\tau_{FT}}[C_{LM} - (1 - k_F)C_{OF}] + E_{EL}, \quad (7.11)$$

and the excess value in the price of digestate over the price of manure to ensure zero production costs of electricity will be:

$$(1 - k_F)C_{OF} - C_{LM} = \frac{E_{EL}k_{BM}q_{BM}\eta_G\tau_{FT}}{3.6\rho_{PB}}, \quad (7.12)$$

or taking into account depreciation expense:

$$(1 - k_F)C_{OF} - C_{LM} = \frac{(E_{EL}+A_{EL})k_{BM}q_{BM}\eta_G\tau_{FT}}{3.6\rho_{PB}}, \quad (7.13)$$

where $B_{EL}$ – general production costs for biomethane-based electricity production, EUR; $W_{EL}$ – amount of produced electricity, kWh; $C_{EL}$ – production costs of electricity, EUR kWh$^{-1}$; $E_{PEL}$ – production expenses for producing electricity based on biomethane excluding the price of liquid manure and digestate, EUR; $E_{EL}$ – specific production expenses for biomethane-based electricity production, EUR kWh $^{-1}$; $q_{BM}$ – heat-forming capacity of biomethane, MJ·m$^{-3}$; $\eta_G$ – efficiency factor of a diesel-generator when receiving electricity, relative units; 3.6 – conversion factor, MJ/kWh; $A_{EL}$ – depreciation expense for biomethane-based electricity production, EUR·kWh$^{-1}$.

Further detailing of expression (7.11), by revealing the structure of specific production expenses for biomethane-based electricity production, allows us to write down:

$$C_{EL} = \frac{3.6\rho_{PB}}{k_{BM}q_{BM}\eta_G\tau_{FT}}[C_{LM} - (1 - k_F)C_{OF}] + (1 + k_{TE} + k_{GEE}) \times$$
$$\times (MAR_{EL} + EL_{EL} + S_{EL}), \quad (7.14)$$

where $MAR_{EL}$ – deductions for maintenance and repair of biogas plant for electricity production, EUR·kWh$^{-1}$; $EL_{EL}$ – costs of electricity consumed in the production of electricity based on biomethane, EUR·kWh$^{-1}$; $S_{EL}$ – wages fund with social charges while biomethane-based electricity production, EUR·kWh$^{-1}$.

Given the relative constancy of some components of expression (7.14) we can write:

$$C_{EL} = a_{EL}[C_{LM} - (1 - k_F)C_{OF}] + bE_{EL}, \quad (7.15)$$

where $a_{EL} = \frac{3.6\rho_{PB}}{k_{BM}q_{BM}\eta_G\tau_{FT}}$ – need in biomass for receiving 1 kWh of biomethane-based electricity during fermentation, t/ kWh; $E_{EL} = MAR_{EL} + EL_{EL} + S_{EL}$ – specific production expenses for biomethane-based electricity production without taking into

account the cost of organic fertilizers, EUR·kWh$^{-1}$.

The data of modeling the production costs of biomethane-based electricity production depending on the difference between the prices of liquid manure biomass before fermentation in the digester and digestate after fermentation are presented in fig. 7.20.

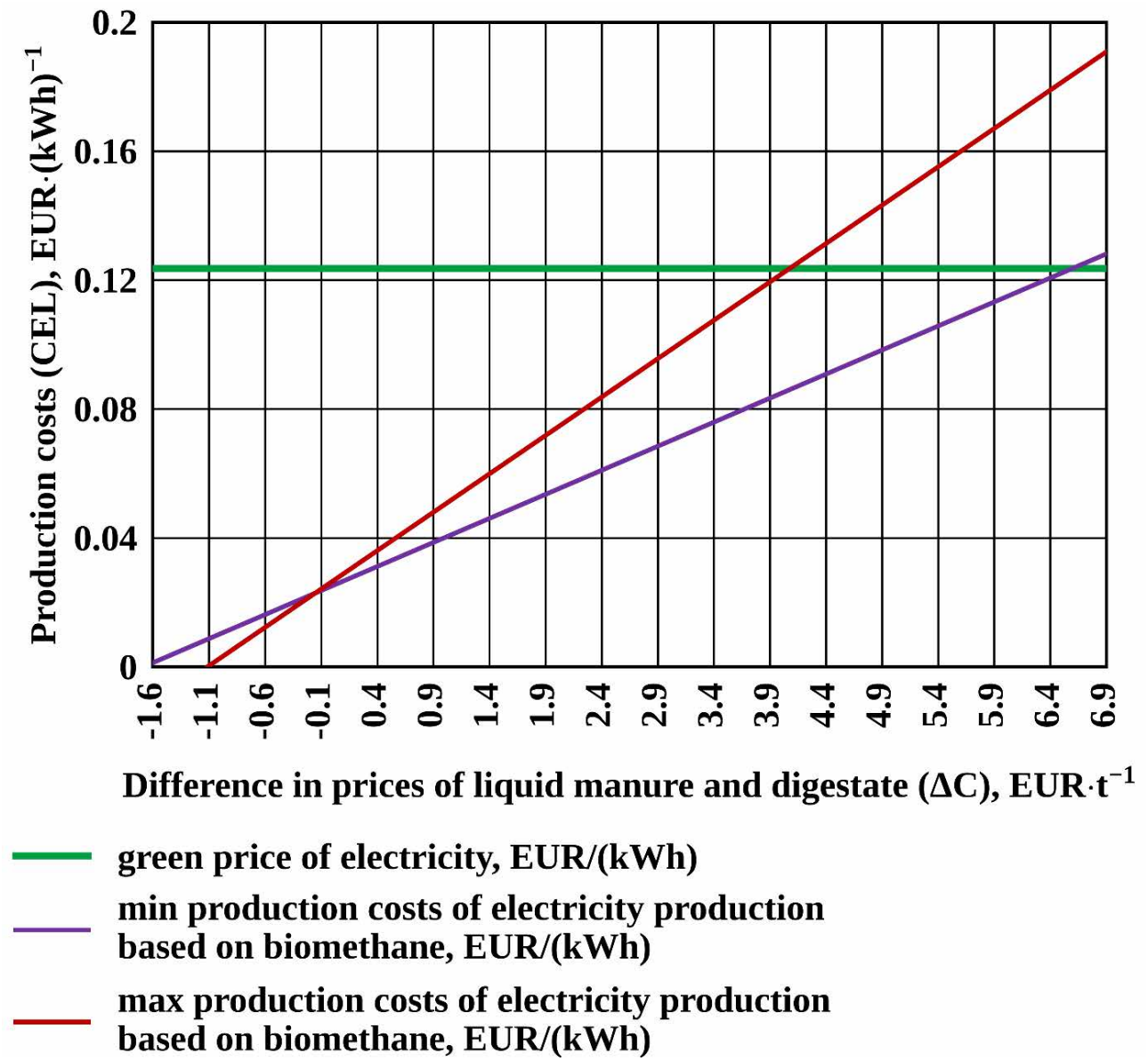


**Fig. 7.20. Calculation of the production costs of biomethane-based electricity production when price of digestate after fermentation $C_{OF}$=3.4 EUR·t$^{-1}$ and $k_F$=0.04**

Technological and economic initial data for the calculation of production costs of biomethane-based electricity production in the case of anaerobic fermentation of cattle and pig manure are given in table 7.5.

The value of $\frac{3.6\rho_{PB}}{k_{BM}q_{BM}\eta_G\tau_{FT}}$ is the inverse of the amount of electricity that can be obtained per unit biomass during anaerobic digestion. This unique value is easily determined on the basis of biogas plant production indicators, and the presence of values of fixed costs of the biogas plant and the difference in prices for liquid manure and

digestate allow to predict the profitability of biomethane-based electricity.

Thus, the difference between the price of digestate and the price of liquid manure before fermentation and a requirement in biomass to get one kW hour of electricity play an important role in estimating production costs of biomethane-based electricity production.

**Table 7.5. Technological and economic initial data for the calculation of the production costs indexes of biomethane-based electricity production**

| Index | Symbol | Value |
|---|---|---|
| Heat-forming capacity of biomethane, MJ·m$^{-3}$ | $q_{BM}$ | 37 |
| Efficiency factor of a diesel-generator when receiving electricity, relative units | $\eta_G$ | 0.38 |
| Need in biomass for receiving 1 kWh of electricity during fermentation, t/kWh | $\frac{3.6\rho_{PB}}{k_{BM}q_{BM}\eta_G\tau_{FT}}$ | 0.0239 |
| Deductions for maintenance and repair of biogas plant, EUR kWh$^{-1}$ | $MAR_{EL}$ | 0.013 |
| Costs of electricity consumed for the production, EUR kWh$^{-1}$ | $EL_{EL}$ | 0.004 |
| Wages fund with social charges for personnel, EUR kWh$^{-1}$ | $S_{EL}$ | 0.003 |

The zero-profit of electricity production will be when the price of digestate will be less than the price of liquid manure before fermentation in the range from 4.1 to 6.6 EUR/t. The suggested methodology may be useful for the economic assessment of biomethane-based electricity production costs.

**Questions for self-assessment:**

1. What are the main advantages and disadvantages of a rotating biogas reactor?
2. How is the power consumed by the drive motor of a rotating biogas reactor from the electric grid determined?
3. What are the methods of reducing the power consumption for rotating biogas reactors?
4. Explain the effect of the immersion coefficient of a filled rotating methane tank on the power of the drive mechanism.
5. What causes fluctuations in electrical power consumption during the operation of a rotating reactor?
6. How does mixing affect the yield of biogas?
7. What are the main design elements of a biogas plant?
8. What are the main methods of reducing energy consumption during the operation of a biogas plant?
9. What is the role of biomass inoculation in the operation of a biogas plant?
10. How is biomass inoculated during the operation of a biogas plant?
11. Tell us about the structure and operating principle of the biogas plant.

12. How to determine the production cost of biomethane production?

13. What is the main technological indicator of production that determines the economic efficiency of biomethane production?

14. What is the cost of biomethane production excluding the cost of organic fertilizers?

15. What methods of obtaining thermal energy from biogas do you know?

16. Name the types of gas burners.

17. What is the difference of a boiler burner for burning biogas?

18. What is the difference between a biogas-powered stove?

19. What are the main elements of a gas boiler?

20. Specify the purpose and classification of gas boilers?

21. What is the gas boiler burner designed for?

22. What causes the differences between biogas burners and natural gas burners?

23. What are the main ways to use biomethane?

24. Why is it necessary to purify and enrich biogas?

25. What gas is called biomethane?

26. What gas is called biomethane?

27. What are the main stages of biomethane purification and enrichment.

28. Under what conditions is it possible to supply biogas to the general natural gas network?

29. How is hydrogen sulfide removed from biogas?

30. How is biogas drained?

31. What process is called biogas enrichment?

32. How is biogas enriched?

33. What is called cogeneration?

34. What is called a cogenerator?

35. What is a cogeneration plant for processing the resulting biogas?

36. What is a trigeneration plant for processing the resulting biogas?

37. How can biomass be heated in biogas reactors?

38. How to determine the production cost of electricity production based on biomethane?

39. What indicator of a diesel generator determines the economic efficiency of generating electricity based on biomethane?

40. What is the need for biomass to produce 1 $m^3$ of biomethane during fermentation?

41. What is the need for biomass to produce 1 kW h of electricity during fermentation?

42. What is the cost of electricity production in agricultural production based on biomethane?

43. What is the estimated payback period for biogas plants in agricultural production?

44. What is the “green tariff” and what how is it connected with the operation of biogas plants?

45. How much of the thermal energy of biogas can be converted into electricity?

**References:**


1. Abbasi T., Tauseef S. M., Abbasi S. A. Biogas Energy. New York : Springer, 2012. 169 p.
2. Baader W., Dohne E., Brenndörfer M. Biogas in Theorie und Praxis. Behandlung organischer Reststoffe aus der Landwirtschaft durch Methangärung. Darmstadt : KTBL, 1978. 134 p.
3. Biogas Guide. From receipt to use. 5th ed. Gülzow : FNR, 2012. 213 p.
4. Biogas production and use in Ukraine / ed. board: J. Koop, J. Hochi, J. Fulton et al. ; resp. R. Schulz. Berlin ; Kyiv : Biogasrat e.V. ; Arzinger, 2012. 74 p.
5. Eder B., Schulz H. Biogas-Praxis : Grundlagen, Planung, Anlagenbau, Beispiele, Wirtschaftlichkeit. 4th ed. Staufen bei Freiburg : Ökobuch, 2007. 238 p.
6. Geletukha G. G., Kucheruk P. P., Matveev Yu. B. Prospects for the production and use of biomethane in Ukraine. *Analytical note of the Bioenergetic Association of Ukraine*. 2014. No. 11. 42 p.
7. Golub G. A. Management of technological processes in animal husbandry : textbook. Kyiv : NULES of Ukraine, 2016. 148 p.
8. Golub G. A., Chuba V. V., Tsyvenkova N. M., Marus O. A., Yarosh Y. D. Bioenergy potential of Ukrainian agriculture. *International Journal of Renewable Energy Research*. 2021. Vol. 11, No. 3. P. 1223–1229.
9. Golub G. A., Dubrovina O. V. Biomethane formation in biogas installations. *The 8th International Research and Development Conference of Central and Eastern European Institutes of Agricultural Engineering* : proceedings. Poznan ; Puszczykowo, 2013. P. 55–58.
10. Golub G. A., Dubrovina O. V. Substantiation of the level of immersion and the coefficient of filling with biomass of a rotating methane tank. *Scientific Bulletin of the National University of Life and Environmental Sciences of Ukraine. Series: Machinery and energy of agro-industrial complex*. 2012. Iss. 170, Part 2. P. 55–61.
11. Golub G. A., Dubrovina O. V., Chuba V. V., Pavlenko M. Yu. Experimental determination of the specific mixing power of biomass in a rotating reactor. *Scientific Bulletin of the National University of Life and Environmental Sciences of Ukraine. Series: Machinery and energy of agro-industrial complex*. 2013. Iss. 185, Part 1. P. 272–277.
12. Golub G. A., Kukharets S. M. Determination of parameters of biomass particles movement during methane tank rotation. *Scientific Bulletin of the National University of Life and Environmental Sciences of Ukraine. Series: Machinery and energy of agro-industrial complex*. 2015. Iss. 212, Part 2. P. 254–264.
13. Golub G. A., Kukharets S. M., Marus O. A., Yarosh Y. D. Mechanics of particle motion on the rotating blades of fermentation reactors. *Machinery and technologies of agro-industrial complex*. 2016. No. 3 (78). P. 10–13.
14. Golub G. A., Kukharets S. M., Ruban B. O. Features of the design of a modular biogas plant with a rotating reactor. *Machinery and technologies of agro-industrial complex*. 2014. No. 9 (60). P. 10–14.
15. Golub G. A., Kukharets S. M., Zavadska O. A., Marus O. A. Determination of the rate of organic biomass decomposition in biogas reactors with periodic loading.

*International Journal of Renewable Energy Research*. 2019. Vol. 9, No. 4. P. 1741–1750.

16. Golub G. A., Lutak V. A., Kepko O. I., Marus O. A., Yaremenko O. Determining impact of difference in price of liquid manure and degestate on production costs of biomethane and electricity. *Engineering for Rural Development* : proceedings of the 20th International Scientific Conference, Jelgava, 26–28 May 2021. Jelgava, 2021. Vol. 20. P. 314–319.

17. Golub G. A., Marus O. A. Mechanics of particle motion along the radial blade of a rotating drum. *Scientific Bulletin of the National University of Life and Environmental Sciences of Ukraine. Series: Machinery and energy of agro-industrial complex*. 2016. Iss. 241. P. 350–358.

18. Golub G. A., Sidorchuk O. V., Kukharets S. M., Gokh V. V., Osaulenko S. V., Zavadska O. A., Ruban B. O., Polikovskaya N. L., Shvets R. L., Chuba V. V., Pavlenko M. Yu. Technology of biological waste processing in biogas plants with rotating reactors. Kyiv : NULES of Ukraine, 2014. 106 p.

19. Golub G. A., Voitenko V. O., Ruban B. O., Yermolenko V. Modern trends in the development of biogas plants. *Machinery and technologies of agro-industrial complex*. 2012. No. 2 (29). P. 18–21.

20. Handreichung. Biogasgewinnung und -nutzung / Institut für Energetik und Umwelt gGmbH, Bundesforschungsanstalt für Landwirtschaft, Kuratorium für Technik und Bauwesen in der Landwirtschaft. Gülzow : FNR, 2006.

21. Himanshu H., Murphy J. G., Grant J., O'Kiely P. Antagonistic effects on biogas and methane output when co-digesting cattle and pig slurries with grass silage in in vitro batch anaerobic digestion. *Biomass and Bioenergy*. 2018. Vol. 109. P. 190–198.

22. Kudrya S. O. The state and prospects of development of renewable energy in Ukraine. *Bulletin of the National Academy of Sciences of Ukraine*. 2015. No. 12. P. 19–26.

23. Kukharets S. M. Increasing the energy autonomy of agroecosystems. Mechanical and technological bases : monograph. Zhytomyr : ZhNAEU, 2016. 192 p.

24. Kukharets S. M., Golub G. A. Substantiation of energy costs for the drive of a rotating reactor of a biogas plant. *Technical and technological aspects of development and testing of new equipment and technologies for agriculture of Ukraine*. 2014. Iss. 18 (32), Book 2. P. 356–364.

25. Kuzmenko M., Golub G. A., Kukharets S. M. Farmer's biogas. *The Ukrainian Farmer*. 2016. No. 7. P. 70–71.

26. Metantenk : pat. 110077 Ukraine : IPC C02F 11/04, C02F 3/28 / G. A. Golub, S. M. Kukharets ; applicant and patent owner National University of Life and Environmental Sciences of Ukraine. No. a201409259 ; appl. 19.08.2014 ; publ. 10.11.2015, Bull. No. 21.

27. Voelklein M., Rusmanis D., Murphy J. Increased loading rates and specific methane yields facilitated by digesting grass silage at thermophilic rather than mesophilic temperatures. *Bioresource Technology*. 2016. Vol. 216. P. 486–493.

# 8. USE OF STRAW FOR ENERGY NEEDS

**Lecture Plan:**


**8.1. General structure of energy use of grain straw 185**
**8.2. Straw harvesting technology 186**
**8.3. Technologies for the production of fuel pellets and briquettes 191**
**8.4. Use of straw burning boilers 196**
**8.5. Fuel properties of straw and other plant residues 203**


## 8.1. General structure of energy use of grain straw

Ukraine annually produces from 50 to 60 million tons of grain and leguminous crops. At the same time, straw is also produced in the same volumes. It is mainly used as fertilizer for soils, as well as bedding and animal fodder in animal husbandry.

But from 20 to 30% of straw can be used annually for alternative uses: direct burning and use as raw materials for the production of biofuels (briquettes, pellets).

When burning straw in boilers, hot water supply and heating of premises can be implemented. These processes are provided by autonomous heating systems. Such systems can be small or large and can be used for private homes, as well as for large areas or businesses.

Straw is an environmentally friendly source of energy. In the process of straw growth, the same amount of carbon is absorbed that is released during its combustion. Straw is a local fuel that is quite common in agricultural areas and relatively cheap when compared to traditional fuel. Thus, the upper calorific value of straw (dry matter) is 4.9 kW h/ kg. For a typical humidity of 15%, the lower calorific value is 4.1 kW h/ kg. The amount of energy contained in 1 $m^3$ of compacted bale straw is up to 450 kW h (with density up to 130 kg/$m^3$). In Ukraine, the most promising for use in the coming years can be considered straw-burning farm boilers and boilers for small heating networks with a capacity of 0.1 to 1 MW. But the widespread use of these technologies requires solving a number of issues related to the organization of straw collection, bale pressing, transportation and storage of straw. Also, issues concerning the uniformity of straw burning in the boiler furnace remain unresolved.

In Ukraine, the biggest obstacle to the energy use of straw is the limited experience and necessary investment. Less significant obstacles are:

– the need to develop a straw market with attractive prices for both consumers and suppliers;

– in some cases, the presence of pesticides can lead to an increase in the chlorine content in the straw. However, if the straw is kept in the fields for a certain period (wilting), the chlorine content reaches low values.

Another important obstacle to the use of straw as fuel is the lack of suitable furnaces for burning it. Dry (humidity up to 25%) straw burns well in all kinds of furnaces, but its efficiency (especially when not fully loaded) is quite low and does not exceed 45%. However, the significant heterogeneity of biomass in terms of chemical composition and physical properties causes some difficulties, both in the combustion process and in the emission of components that are byproducts of the process. The

characteristics of straw depending on the technology of their preparation for combustion are given in table 8.1.

**Table 8.1. Characteristics of solid types of biofuels depending on the technology of their preparation for combustion**

| Type of straw | Volume mass (density), kg/m$^3$ | Specific volume, m$^3$/t | Specific energy output, MW/m$^3$ |
|---|---|---|---|
| **Ordinary straw** | 20-50 | 20-50 | 0.7-0.16 |
| **Crushed straw (chaff)** | 40-60 | 16-25 | 0.13-0.19 |
| **Large rectangular packs** | 70-130 | 7.7-14 | 0.23-0.43 |
| **Round packs** | 60-90 | 11-16 | 0.19-0.29 |
| **Bundles** | 50-110 | 9-20 | 0.16-0.36 |
| **Briquettes** | 300-450 | 2.2-3.3 | 0.99-1.48 |
| **Pellets** | 350-500 | 1.9-3.0 | 1.1-1.6 |

The physical features of straw as an energy carrier are presented in table 8.2.

**Table 8.2. Influence of humidity on the calorific value of biomass**

| Material | Drying method | Humidity, % | Calorific value, MJ/kg |
|---|---|---|---|
| **Grain straw** | immediately after harvesting | 15-20 | 12-15 |
| | air dried | 14-17 | 14-15 |
| **Rapeseed straw** | immediately after harvesting | 30-40 | 10-12 |
| | air dried | 17-20 | 14-15 |
| **Corn stalk** | immediately after harvesting | 45-60 | 5-8 |
| | air dried | 15-18 | 15-17 |

Straw is a complex type of fuel, since providing it to the boiler is complicated by the inhomogeneous structure of straw, relatively high humidity and a large volume compared to the energy content. Moreover, 70% of the components of burning straw are contained in volatile gases that are released during the combustion process. A large number of volatile components require a special design of the furnace and the organization of airflow in it. Straw contains chlorine compounds that can cause corrosion problems at high temperatures. The melting point of straw ash is low due to its high alkali metal content. As a result, there may be problems with ash removal.

For efficient energy use of straw, first of all, it is necessary to optimize the structure of the technological process of straw conversion (burning or processing). This process can be represented as a single process chain (fig. 8.1) containing multidirectional technological operations (factors).

## 8.2. Straw harvesting technology

The efficiency of using the non-grain part of the harvest as an energy carrier largely depends on the costs of straw harvesting. Thus, a 20% increase in costs leads

to an increase in the cost of energy by 10-15%. In Ukraine, the technology of collecting straw of grain crops has also become widespread: grinding with a combine harvester, transportation by tractor trailers, rolling with the formation of a rucksack; rolling with a combine harvester, pulling with a cable travois to the edge of the field, rolling; roll technology of collecting straw.

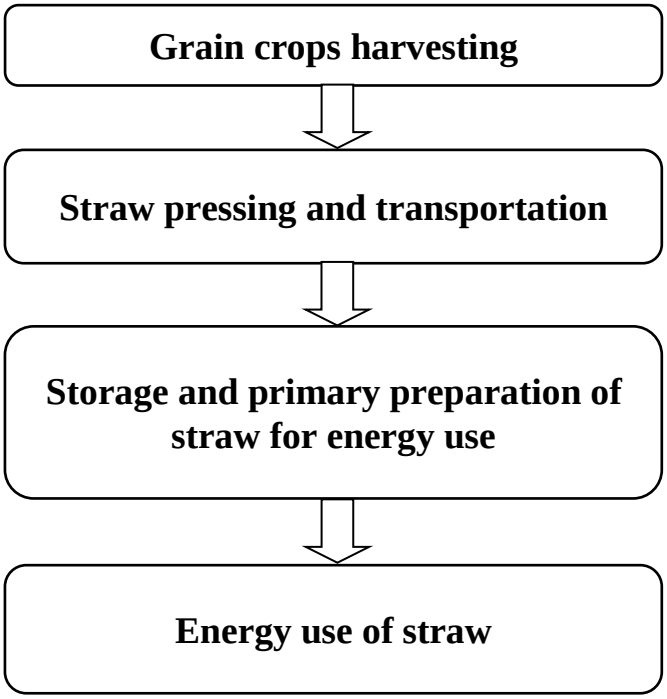


**Fig. 8.1. Technological chain of energy uses of straw**

As a rule, straw harvesting technologies that are based on crushing straw with a combine harvester, transportation by tractor trailers, rolling with the formation of a stack, as well as with rolling with a combine harvester, pulling a cable travois to the edge of the field and subsequent rolling, are used in technological processes of forage harvesting, in order to provide livestock farms with fodder and bedding materials.

Roll technology of collecting straw in bales and rolls provides for the possibility of laying it under a cover, which improves the quality of the process of preparing plant material and reduces transport costs during subsequent combustion in boilers. Thus, the technology of harvesting straw, hay and coarse fodder in pressed form occupies a dominant place in Western Europe. Straw is pressed into small, medium and large bales of cylindrical and rectangular shape with varying degrees of density (table 8.3, 8.4).

Small bales have been the most common type of Bale used in the household in low-power boilers for many years. Their main advantage is the ability to move bales manually. In recent years, the demand for small bales has significantly decreased, accordingly, the production of piston balers for forming such bales has decreased.

Medium cylindrical bales are widely used in farm boilers along with rectangular bales. Recently, the technology of making hay in rolls using roll balers has become widespread. Their share in the global market is up to 80% of all sales of straw picking machines. This is due to the simplicity of the design of roll balers and, accordingly, their lower cost compared to balers of large bales.

**Table 8.3. Technological properties of bales**

| Bale density | | Moisture content of straw in a bale (%) | Recommended territorial area for bale formation |
|---|---|---|---|
| density type | value ($kg/m^3$) | | |
| **low** | up to 100 | up to 40% | Polissia |
| **average** | 100…200 | up to 25% | Forest-steppe |
| **high** | 200…300 | up to 22% | Steppe |

Large bales can be used in large district heating boilers. At the same time, the technology of collecting straw using balers of large-sized bales, which have undeniable advantages over other machine designs, has recently been spreading. The main ones are as follows: high productivity and, accordingly, lower labor costs; maintaining high quality of the material by reducing losses during harvesting; better use of the load capacity of vehicles, storage areas, increasing the productivity of loaders.

**Table 8.4. Basic bale sizes**

| Bale size | Bale density ($kg/m^3$) | Bale weight (kg) | Cross size of a bale | | Bale length (m) |
|---|---|---|---|---|---|
| | | | rectangular shape (cm×cm) | round shape (m) | |
| **small** | 100-125 | 12-15 | 46×36 | – | 1.3 |
| **average** | 100-140 | 200-300 | 80×80 | 1.2-1.8 | 1.2-1.7 |
| **dig** | 130-150 | 450-500 | 120×130 | – | 2.4 |

For collecting straw in bales, piston balers are used for forming small-sized bales, roll presses and presses for forming large-sized bales. The classification of balers for forming bales of plant origin of various shapes and sizes is presented in fig. 8.2.

Pressing straw into rectangular or cylindrical bales is successfully used in modern agricultural production and is becoming one of the main technological operations in resource-saving technologies for collecting and using straw. Thanks to straw pressing, transportation costs are significantly reduced, storage facilities are used more fully, and all loading and unloading operations are mechanized.

Regarding balers, we should mention such well-known manufacturers as: Krone, Claas, Welger, Gehl, Fortschritt, Deutz-Fahr, New Holland, Vermeer, John Deere, Hesston, Massey Ferguson, Case IH, etc. Ukraine is represented by the following enterprises: OJSC "Irpinmash", JSC "Chernivtsisilmash" and others.

Piston-type balers (fig. 8.3), which are widely used in small and medium-sized agricultural enterprises.

For the formation of medium-sized balers, roll balers have recently been widely used (fig. 8.4).

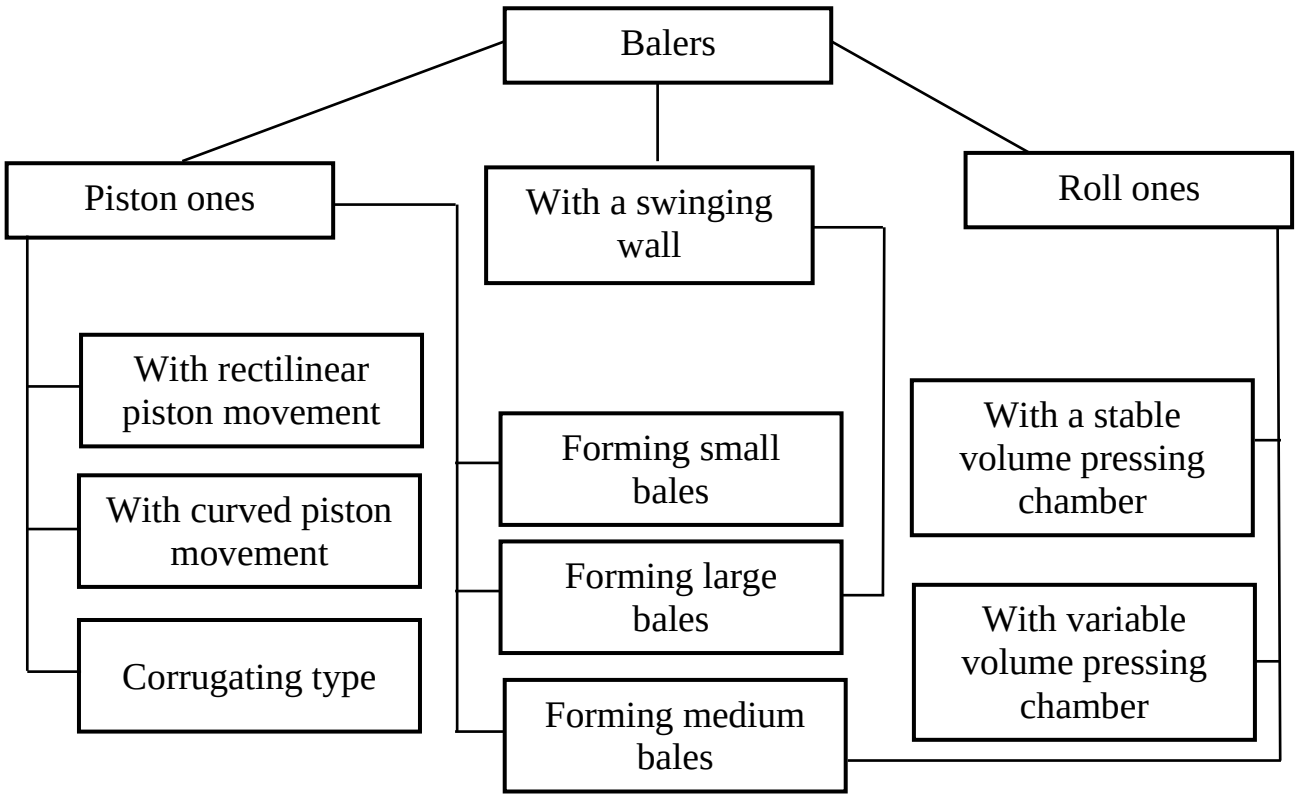


**Fig. 8.2. Classification of balers**




**Fig. 8.3. Piston type baler for forming small-sized bales, FAMAROL Z-511 brand (Unia Group)**

This is due to the simplicity of the design of roll balers and, accordingly, their lower cost when compared to balers of large bales. Therefore, such machine designs are most common among manufacturers. Roll balers are divided into presses with chambers of constant and variable cross-section. By their design, the forming chambers are of roller, chain-slat and belt types. Balers with chambers of variable cross-section

form rolls with a diameter of 0.8 to 1.8 m. The diameter of rolls is set depending on the storage conditions. For fodder preparation, they are used rolls of smaller diameter, and for straw – larger.




**Fig. 8.4. Roll-type baler for forming bales of medium and large sizes, Rollant 250 brand (Claas)**

At the same time, technology with the use of large-sized balers has been becoming more and more popular (fig. 8.5).




**Fig. 8.5. Piston type baler for forming bales of medium and large standard sizes, Krone brand "BigPack VFS1290"**

After forming bales and rolls, they are loaded onto vehicles and delivered to storage areas (fig. 8.6).



**Fig. 8.6. Transport trailer for delivering bales to storage areas**

Straw bales can be stored in various ways: in stacks in the open air, in open storerooms (roof and supports), under tarpaulins, under plastic wrap, in closed rooms. The method of preservation affects the quality of straw. When stored outdoors, about 10% of the straw becomes unsuitable for energy use. Storage in open storerooms leads to a deterioration in the quality of straw, because the humidity of the top layer increases to 25%.

### 8.3. Technologies for the production of fuel pellets and briquettes

The development of technologies and equipment for the production of biofuel pellets and briquettes marked the beginning of the creation of new types of boilers with full mechanization of the fuel loading process and automation of combustion process control.

Biofuel pellets and briquettes are easy to transport, they do not gain moisture, do not rot and do not lose their fuel properties during storage, and are most suitable for mechanized loading to a power plant. The entire process of moving pellets from the manufacturer to the consumer is carried out without the use of manual labor.

The main element (machine) of the granulation (pressing) line is a granulator (press), on the characteristics of which the technical and economic indicators of the entire line depend. After appropriate preparation, the metering screw transports the material to the press. Special rollers, so-called pressing rollers, press the material by passing it through the holes of a rotating annular die (granulator press). Pressing rollers move along flat dies. By changing the diameter of the holes, the length of the press die channel, the distance between the working surface of the dies and rollers, as well as the pressing pressure, it can be obtained a final product that meets the established standards in quality.

For granulation, they are used lines that were used in fodder production (fig. 8.7), as well as modern biomass pelletizing and briquetting lines for thermal needs (fig. 8.8 and 8.9).

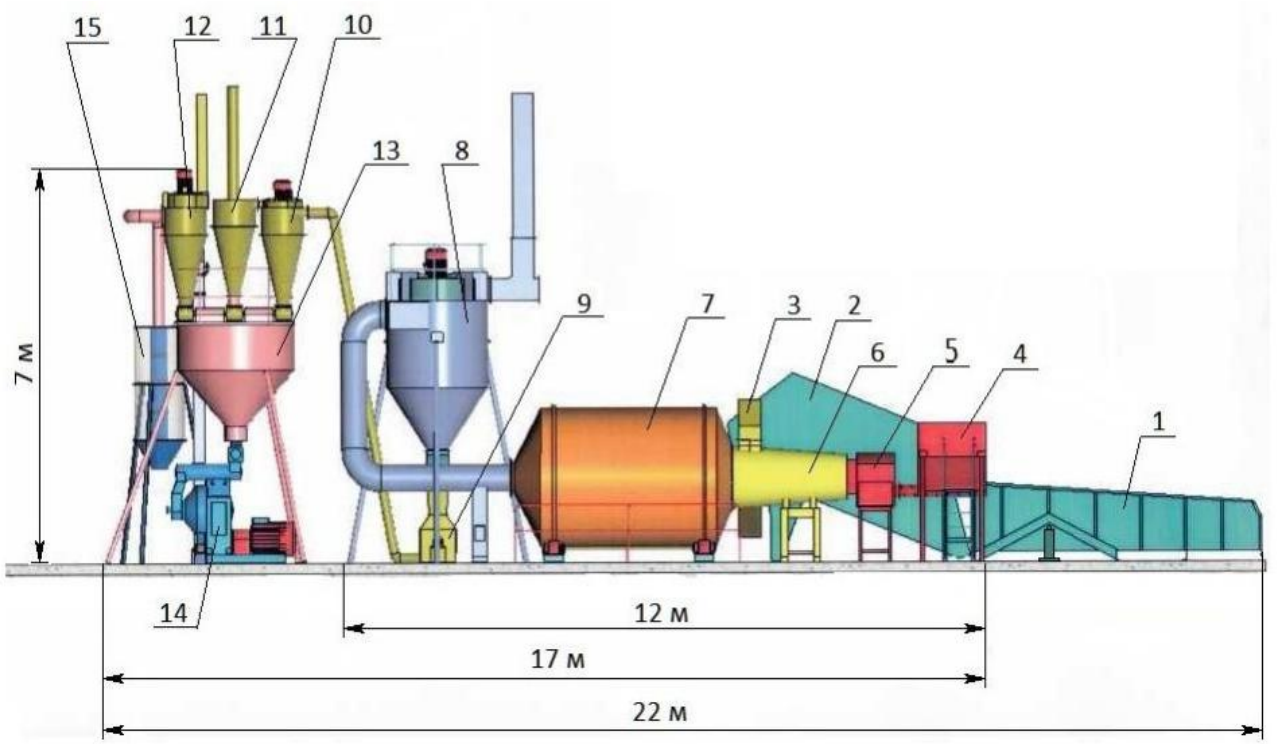


**1 – loader; 2 – feeder; 3-conveyor; 4 – filler hopper; 5 – fuel tank; 6 – heat generator; 7 – dryer; 8, 10, 11, 12 – cyclones; 9 – chopper; 13 – storage hopper; 14 – granulator; 15 – cooler**

**Fig. 8.7. Straw granulation line based on OGM-1.5**



**Fig. 8.8. ECO-BIO-100 biomass pelletizing line produced by National University of Life and Environmental Sciences of Ukraine (Czech Republic-Ukraine)**

After passing through the die, the pellets are cut to the required length, and since

they are heated during the pressing process, they are cooled under the influence of ambient air in the cooler. As a result, they acquire the necessary hardness and strength. Before packing and storing pellets, separation is performed, which allows separating dust, small particles and pellets that do not have sufficient mechanical strength.

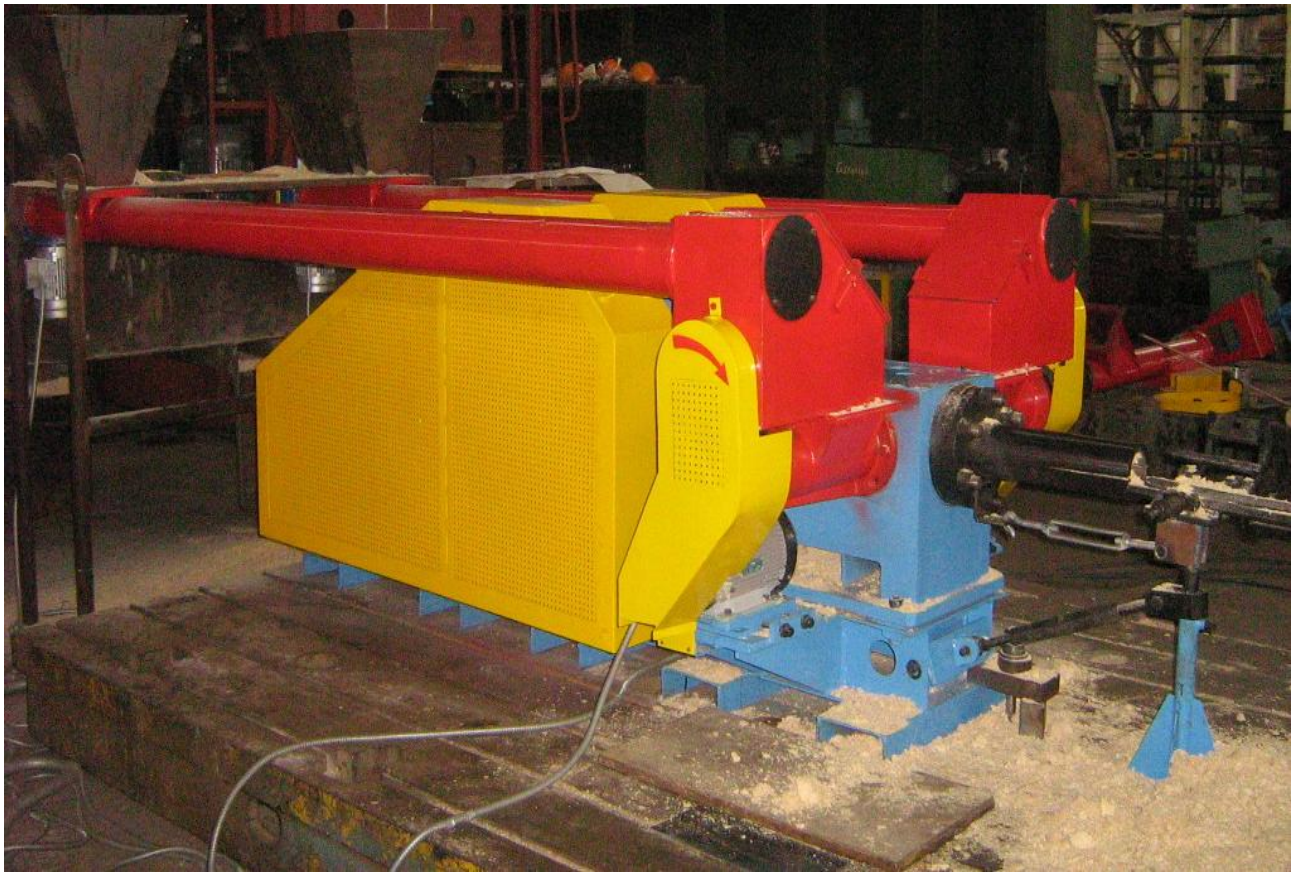

**Fig. 8.9. Briquetting machine B-80 produced by JSC "Presmash "(Ukraine)**

Packaging of pellets depends on the method of their further transportation. Pellets are transported: in bulk; in bags of 10-20 kg; in "Big-Bag" bags. Process pellets, less often – high-quality pellets, are transported in bulk. Packaging in bags of 10-20 kg is quite convenient and is intended for owners of individual boilers. Such bags are transported on pallets. The content of one pallet is 1 t. "Big – Bag" bags are designed for industrial transportation of bulk materials. One such bag contains from 1 to 1.5 tons of pellets. They are used to simplify transportation and maintain humidity. Bins for loading vehicles or bins with metering devices for filling bags of the "Big-Bag" type or a unit for filling small bags are installed at the packaging sites.

The production process of fuel briquettes and pellets from biomass includes the following technological operations (fig. 8.10):

1. Grinding of raw materials (to obtain the fraction that is most suitable for briquetting) – if necessary.
2. Drying of raw materials to a humidity level of 12% or lower – if necessary.
3. Pressing.
4. Cooling.

The general view of the obtained pellets and briquettes is shown in fig. 8.11 and fig. 8.12.

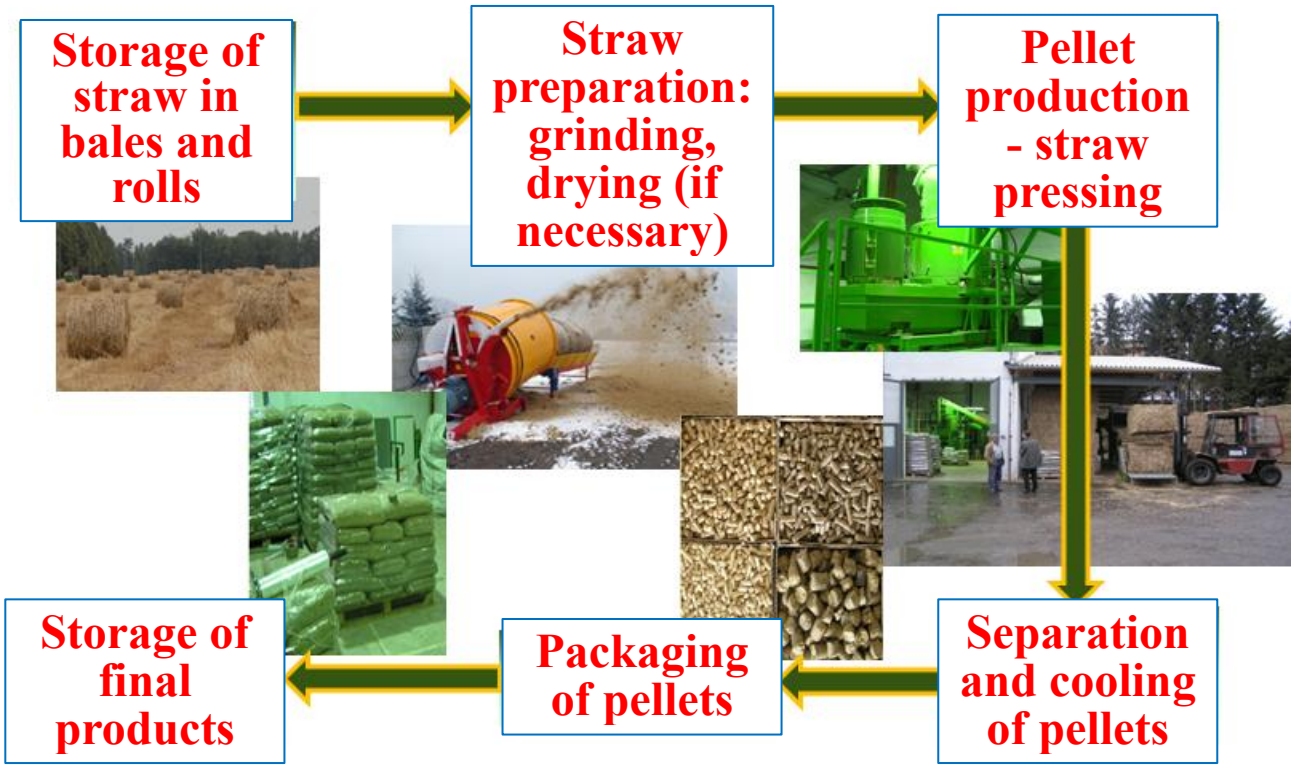


**Fig. 8.10. Technological process of straw pellet production**



**Fig. 8.11. Fuel pellets**

The technology of production of fuel briquettes from straw differs from the technology of production of fuel briquettes from sawdust in the absence of a drying operation. The cut straw bales are fed into the loading hopper of the rotary crusher. Under the influence of weight, they fall into the working chamber, where the straw is

crushed by the blows of the rotor hammers. The specified degree of grinding is provided by the corresponding diameter of the holes on the grid, which is installed on the discharge spout. Through the discharge spout, the crushed straw is sent to the loading hopper, from where it is sent to the press compactor with the help of an mixer, where it is pressed. Under the influence of its own weight, the finished briquettes break off and fall into the discharge hopper.



**Fig. 8.12. Fuel briquettes**

The classification of machines for the production of fuel pellets and briquettes is given in fig. 8.13.

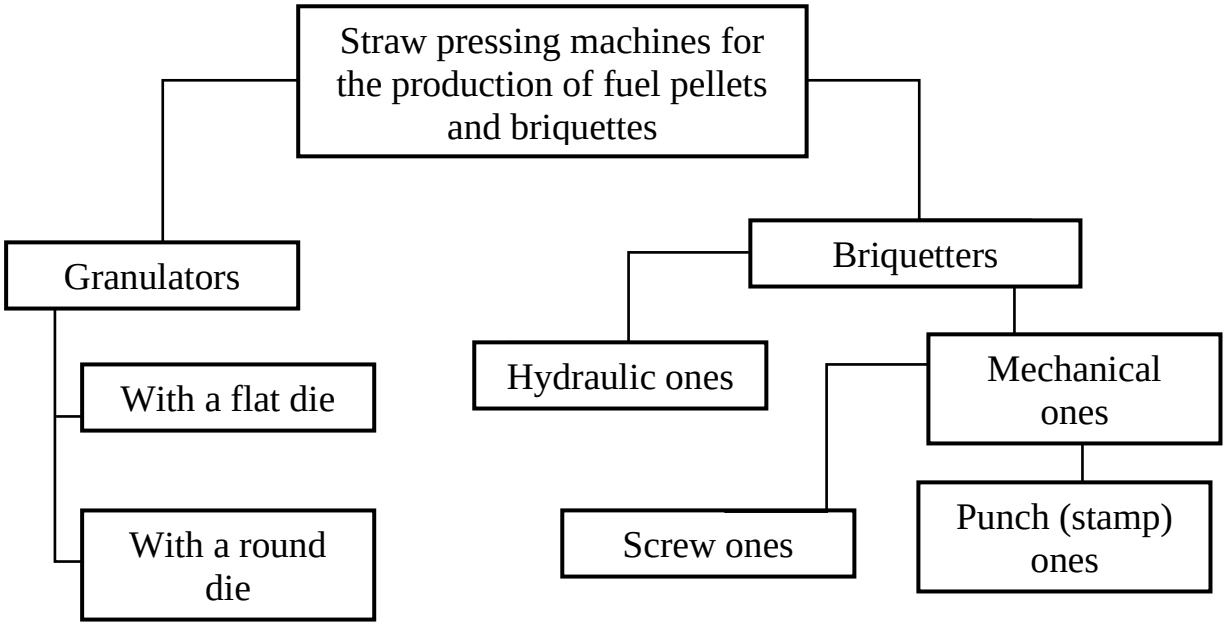


**Fig. 8.13. Classification of machines for the production of fuel pellets and briquettes**

Since the production of pellets in Ukraine is a new industry, which is mainly export-oriented, the pellet production standards adopted in Germany and Austria (table 8.5) have become widespread.

The manufacturing technology does not depend on the types of raw materials and is the same for both straw and sawdust of different tree species. All raw materials with a moisture level of no more than 12% are subject to briquetting and granulating.

**Table 8.5. Requirements of individual standards for the quality of pellets produced**

| Quality standards for pellets | Unit of measurement | Value according to the standard ONorm M 7135 (Austria) | Value according to the standard DIN 51731 (Germany) |
|---|---|---|---|
| **Diameter, D** | mm | 4-10 | 4-10 |
| **Length** | mm | 5xD | less than 50 |
| **Density (thickness)** | kg/DM$^3$ | more than 1.12 | 1.0-1.4 |
| **Moisture content** | % | less than 10 | less than 12 |
| **Ash content** | % | less than 0.50 | less than 1.50 |
| **Calorific value of combustion** | MJ/kg | more than 18 | 17.5-19.5 |
| **Sulfur content** | % | less than 0.04 | less than 0.08 |
| **Nitrogen content** | % | less than 0.3 | less than 0.3 |
| **Chlorine content** | % | less than 0.02 | less than 0.03 |
| **Dust content (abrasion)** | % | less than 2.3 | – |
| **Content of auxiliary components** | % | less than 2 | less than 2 |

The capacity of the ECO-BIO-100 biomass pelletizing line is 80 kg/h with an installed power of 8.85 kW. The capacity of the B-80 briquetting machine is 1.2 t/h with an installed power of 40.2 kW.

### 8.4. Use of straw burning boilers

On the basis of the specifics of biomass combustion technologies, all solid fuel boilers can be divided into the following groups:

1. Traditional solid fuel boilers.
2. Solid fuel boilers with pyrolysis combustion (gas generator boilers).
3. Universal (multi-fuel) boilers that can run not only on solid fuel, but also on gas, liquid fuel and electricity.
4. Long-burning solid fuel boilers (top-burning boilers).
5. Automatic boilers.

Recently, boilers in which straw bales are burned have become increasingly widespread in Ukraine. To date, there are already several companies, such as SC "Brig" (fig. 8.14), TH "Teplosfera", TH "Kriger" have mastered the technology of burning

straw and manufacturing equipment for this technological process. After the successful implementation of the first Passat Energi straw boiler in Ukraine, the domestic company "UTEM" acquired a license for the production of such boilers and started their production in Ukraine.



**Fig. 8.14. Grain dryer with TGS-500 heat generator in the educational and experimental farm of National University of Life and Environmental Sciences of Ukraine "Agronomic Experimental Station" and straw heating boiler produced by UTEM**

In Ukraine, straw-burning boilers with a thermal capacity of 150 to 600 kW are produced. There are also known designs of HERLT gas generator boilers for burning straw (fig. 8.15).

Unlike traditional solid fuel boilers, pyrolysis (gas generator) boilers burn gas released from straw due to the high temperature in the combustion chamber. During such combustion, no soot is formed, and the formation of ash is minimized. Boilers with pyrolysis straw combustion have a high efficiency (up to 92%). The design and operating principle of boilers allow automatizing the regulation of their power.

Boilers for burning straw are manufactured as insulated and ready for operation, and they do not require any additional work, preparation and construction of structures, except for the installation of the foundation, chimney and connection to the existing heating network. Depending on the capacity, the boiler furnace can be adapted for burning small or large bales. A wide range of gas-generating boilers with capacities from 89 kW to 4 MW is available for burning straw. Complete with a properly selected water heat exchanger, the boilers form highly efficient and cost-effective systems.



**Fig. 8.15. Gas generator heating boiler for bales of the HERLT company**

Efficient use of solid biofuel boilers is due to the development of modern technologies for preparing raw materials, automatic control systems for the combustion process and special (ceramic) materials of combustion chambers. In typical design and technological solutions of automatic boilers, the function of dispensers is performed by screw conveyors controlled by a given program (fig. 8.16).

Such boilers are designed for heating residential buildings, holiday houses and other objects with a thermal load of up to 50 kW. Thanks to the large volume of the furnace, electronic control using a thermostat and a retort-type burner with a loading device, these boilers operate in automatic mode. They are used for burning fuel pellets from wood and plant biomass. The demand for biofuels at nominal capacity is up to 10 kg per hour. With a minimum load of these boilers, up to 2 kg of fuel pellets per hour is sufficient.

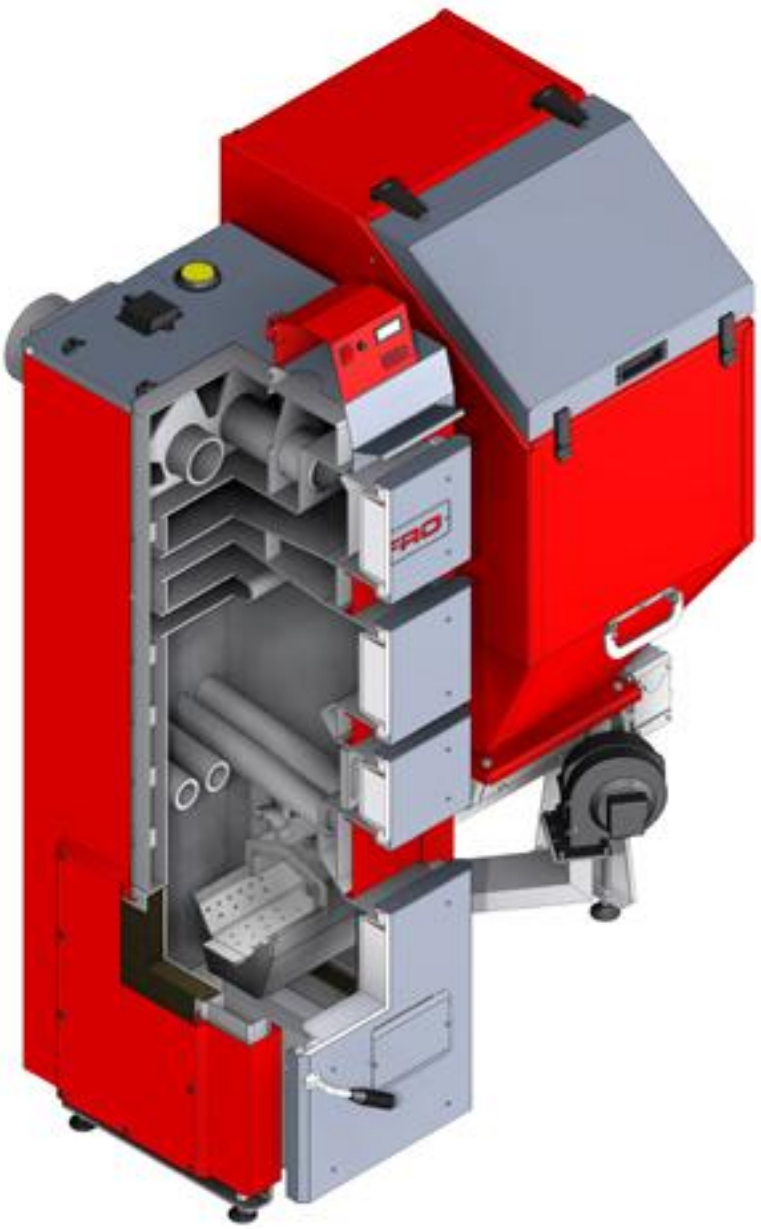

**Fig. 8.16. Household universal solid fuel boiler of the DEFRO Company (Poland)**

Large industrial pellet boilers, also equipped with an automatic fuel supply system (fig. 8.17). Pellets are stored in special bins, from which they are transported directly to the boiler. The entire process of moving pellets can be carried out without the use of manual labor.

Boilers that use briquettes as fuel are similar to boilers in which firewood is burned (fig. 8.18).

However, when burning straw, there are some difficulties associated with the heterogeneity of biomass, relatively high humidity, low specific energy consumption, and low melting point of ash. Therefore, in the burning zone of plant biomass, it is necessary to create favorable conditions for complete combustion of fuel, without melting ash and maintaining a uniform heat release process. Such conditions can be achieved by using top-burning boilers that have two working areas: the first – generation of generator gas and the second – burning of generator gas (fig. 8.19). In

such boilers, it is possible to regulate the heat release process by changing the volume of air entering the working area of the boiler.



**Fig. 8.17. Industrial pellet boiler**



**Fig. 8.18. Domestic hot water boiler Ardenz T100, running on wood and fuel briquettes**

To increase the efficiency of boilers, by reducing the operating time in transient modes, it is necessary to use an automatic control system for the air supply to the furnace, consisting of a microprocessor device, a temperature sensor installed in the

heating cavity of the boiler (fig. 8.20) and a sensor of CO content in flue gases installed in the branch pipe for removing combustion products.

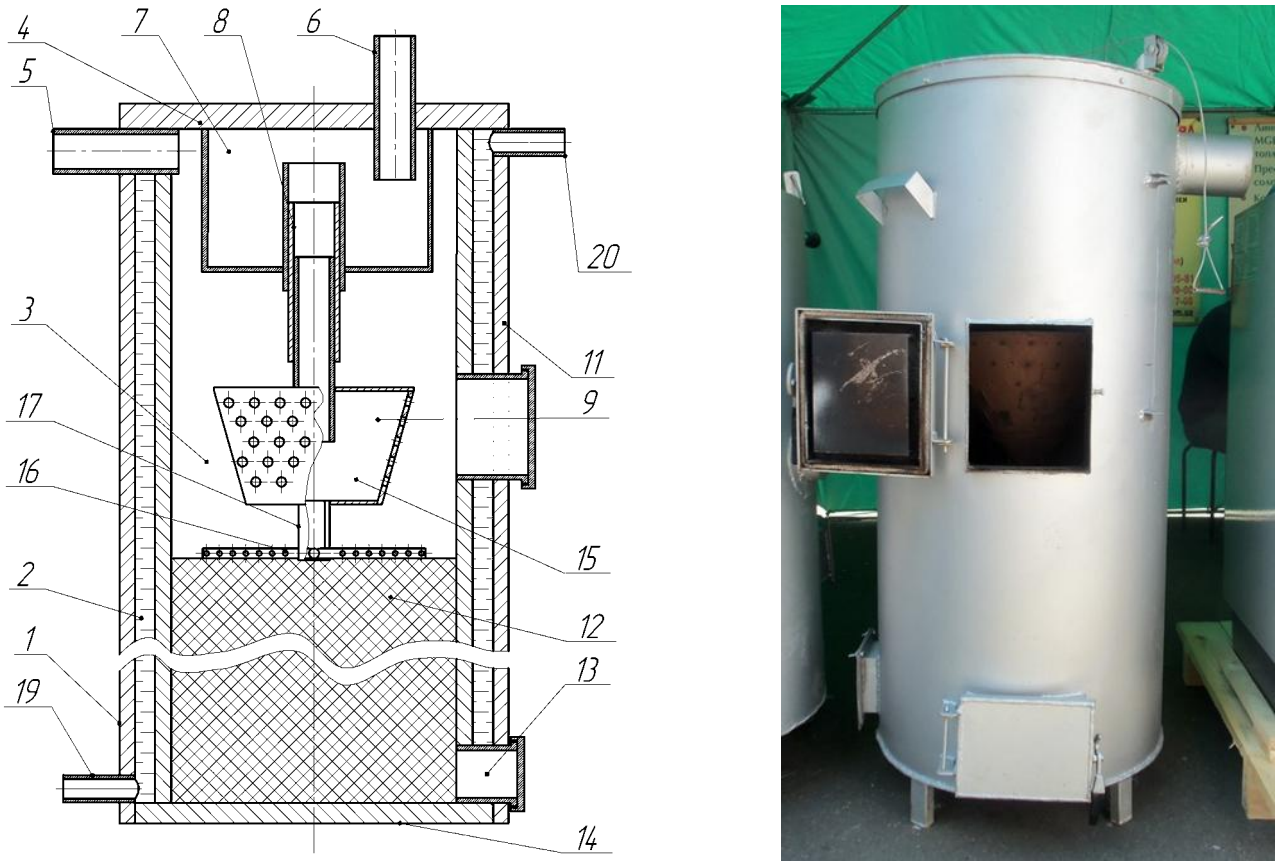


**a)** **b)**

**1 – housing; 2 – cavity; 3 – combustion chamber; 4 – cover; 5 – branch pipe for removing combustion products; 6 – branch pipe for air supply; 7 – intermediate tank; 8 – guide; 9 – air distributor; 10 – holes; 11 – doors for fuel; 12 – fuel; 13 – doors for ash; 14 – bottom; 15 – upper section of the air distributor; 16 – lower section of the air distributor; 17 – connector; 18 – tubular elements; 19 – branch pipe for cold water supply; 20 – hot water outlet pipe**
**a – diagram, b – general view**
**Fig. 8.19. Top-burning boiler for burning straw**

Boilers with a capacity of up to 70 kW use a straw section, which is loaded through the side doors. Boilers of higher power must be loaded with straw rolls through the upper part of the boiler, which is made removable. Therefore, for such boilers, it is necessary to provide for the use of lifting equipment for mechanizing the loading of rolls (fig. 8.21).

Top-burning boilers, when burning straw, due to the use of a special design of the air distributor, allow increasing the combustion area of fuel while maintaining its stable supply to the generator gas formation zone, as well as ensure efficient combustion of combustible gases by supplying additional air to the boiler combustion chamber. At the same time, the heat output in comparison with direct straw combustion in boilers increases by 20%, and the actual efficiency of boilers with top combustion reaches 83%.




**1 – fan for air supply to the boiler furnace; 2 – microprocessor control unit; 3 – temperature sensor**

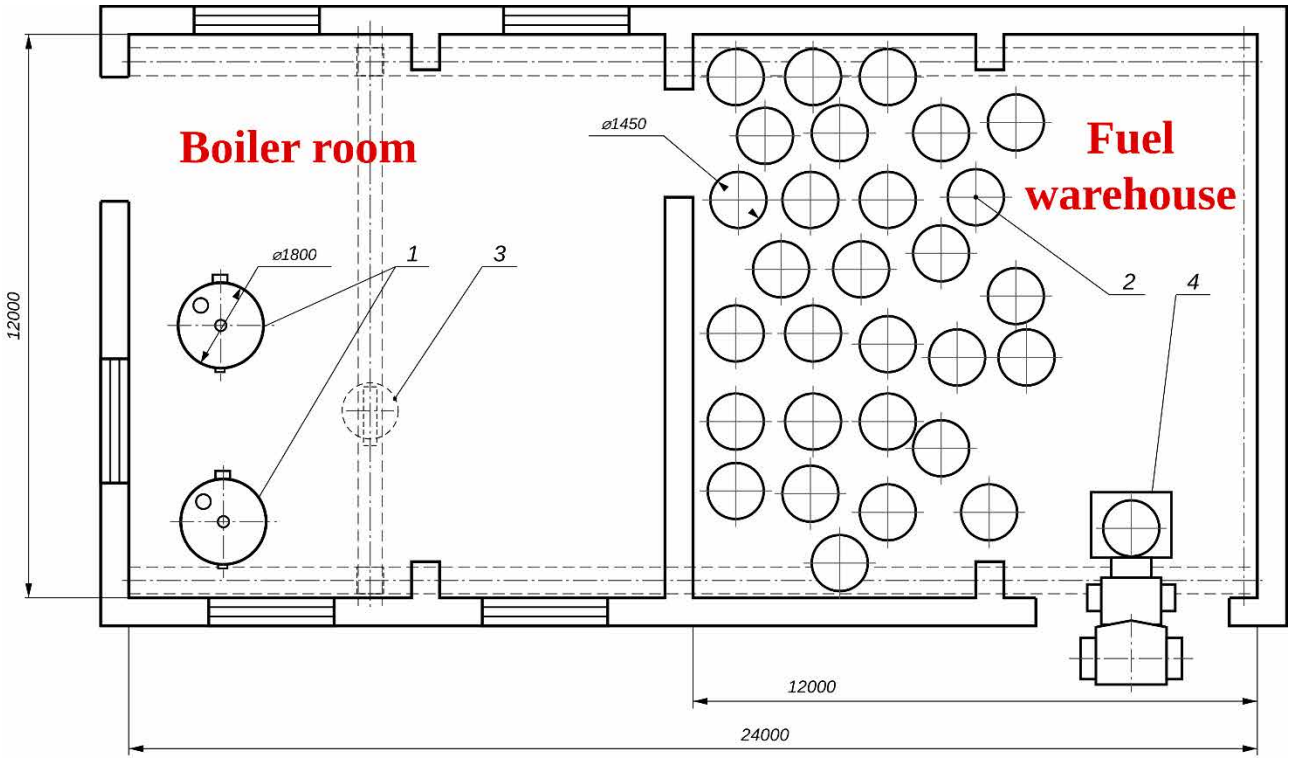


**Fig. 8.20. Boiler control system**

**1 – boiler ($P_k$=200 kW); 2 – straw rolls ($d_m$=1.45 m; $h_m$=1.2 m); 3 – beam crane (equipped with a gripper for rolls); 4 – vehicle for moving straw rolls to the fuel warehouse**

**Fig. 8.21. Diagram of a boiler house equipped with top-burning KG B 200 boilers for burning straw in rolls**

## 8.5. Fuel properties of straw and other plant residues

The classification of plant residues of agricultural production for the purpose of their further use for the production of thermal energy is shown in fig. 8.22, according to which all plant residues are divided according to granulometric composition, bulk density, moisture content, stage of formation, etc. The suitability of raw materials for use for energy purposes is assessed by fuel and technological characteristics, namely: reactivity, density, mechanical strength, content of resinous substances, sintering ability, particle size of fuel based on it, humidity, ash content, sulfur content, windage, calorific value per volume unit.

The humidity of straw during grain harvesting can reach 60%, and when it is temporarily stored under covers, it takes the value of equilibrium humidity: 8-14% in summer and up to 22% in winter.

The volatile content of straw is slightly lower than that of wood (85%), but quite high (70-80%), so it is quite easily ignited and burnt. The ash content of straw is 6.5%. Primary straw belongs to the IV quality class – unsatisfactory, due to its low bulk density (unpressed straw has a bulk density of 30-40 kg/m$^3$). Preliminary preparation of straw for use in heat engineering equipment, for example, cutting in straw cutters and creating polyfraction mixtures based on it, or the production of fuel briquettes and pellets from straw increases its density. The density of polyfraction mixtures from straw-chaff is from 120 to 160 kg/m$^3$, granules – from 580 to 650 kg/m$^3$.

The potential of available grain straw for energy needs is estimated not only by its quantity and territorial location, but also by its chemical composition ($C$ – 46%; $H$ – 5.9%; $N$ – 0.5%; $O$ – 40%; $S$ – 0.08%; $Cl$ – 0.31%) and seasonality of harvesting, which depends on the type of grain crop, its maturation time, geographical location of the farm, climatic conditions and is a significant factor in planning its further processing and use. For example, straw collected in the early harvest contains 4 times more chlorine than collected in later harvest periods. The chlorine content in straw reaches 1% and causes corrosion of elements of heat engineering equipment heating surfaces components.

The calorific value of the combustible mass of straw briquettes and pellets is from 16.5 to 18.8 MJ/kg, which almost corresponds to the calorific value of wood briquettes and pellets (16.8-21 MJ/kg) and coal (15-25 MJ/kg), and depends on the agrotechnical characteristics of grain crops, the influence of environmental parameters, storage conditions and humidity. The analysis of digital values of the calorific value of various types of agricultural plant raw materials for its further use for energy purposes is given in table 8.6.

Grain straw has the following volatile composition: hydrogen ($H_2$), carbon monoxide ($CO$), carbon dioxide ($CO_2$), nitrogen ($N_2$), hydrocarbons ($C_nH_m$). When burning fuel with a high volatile content, it is necessary to provide a sufficient volume of the furnace chambers of the corresponding heat engineering devices to ensure their disposal and supply the necessary amount of air to prevent chemical and mechanical incompleteness of combustion. All types of vegetable raw materials, except straw, have a powdered coke residue, so in order to eliminate it, traditional means of eliminating slag and ash (poking plate) are used. Straw has a sintered or porous coke residue, which

requires the development of special grate designs and mechanisms for collecting and removing coke and ash from the furnace (table 8.7).

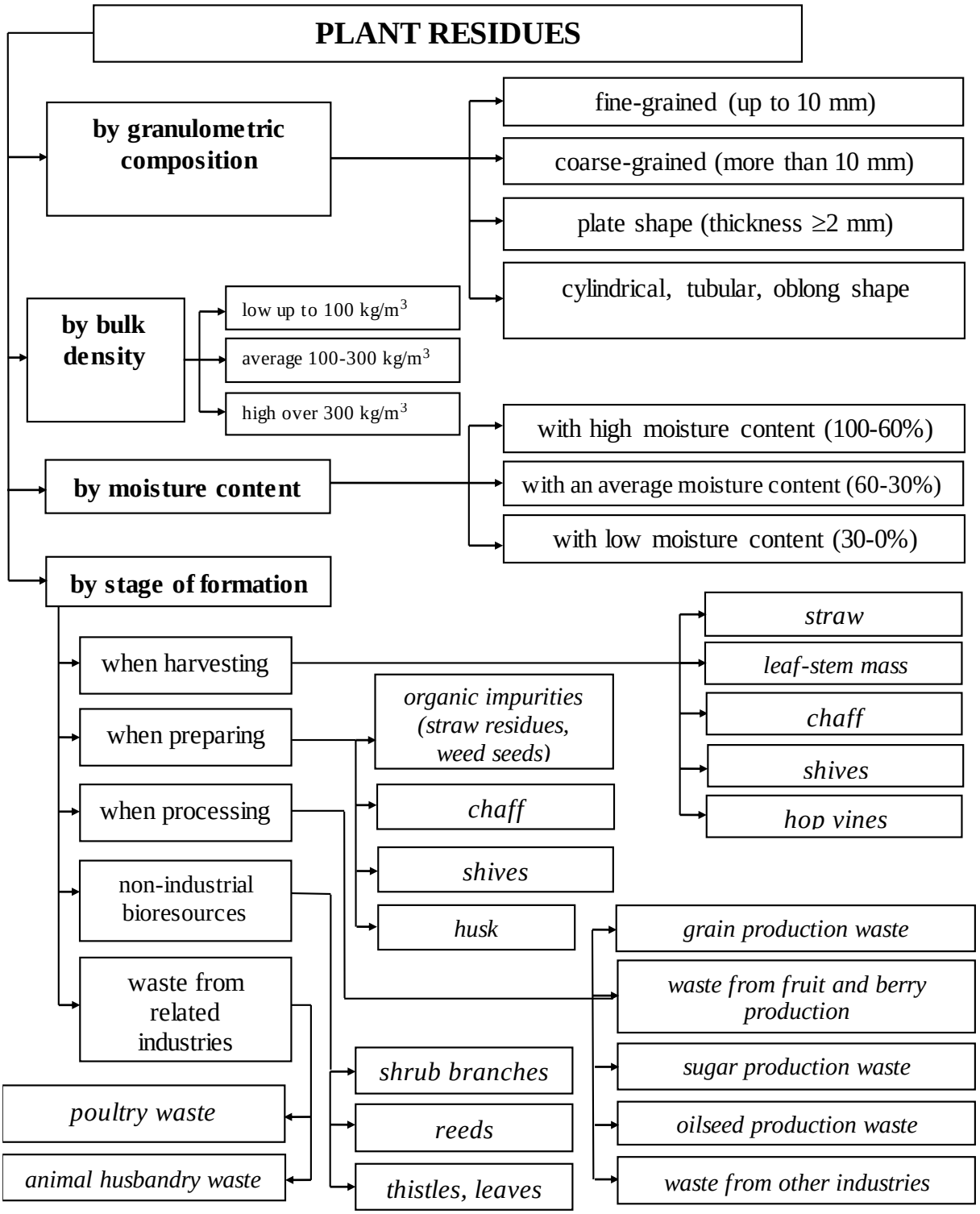


**Fig. 8.22. Raw materials of agricultural production that can be used for the production of generator gas**

The melting point of ash depends on the substances that make up its composition: refractory (lime, alumina, silica) – 1,520-1,825˚C; medium-melting – 1,180-1,425˚C; low-melting – 1,025-1,225˚C. When leaving the high temperature zone, as a rule, it fills the holes of the furnace grates, increases the resistance of heat engineering

equipment and reduces the gas permeability of fuel.

**Table 8.6. Ash content and calorific value of crop residues**

| Plant residues | Ash content of dry mass, % | Highest calorific value $Q_H^{WF}$ of dry mass, MJ/kg | Lower calorific value $Q_L^{WF}$ at humidity $W^P$=20%, MJ/kg | Calculation formula for $Q_L^{WF}$, MJ/kg |
|---|---|---|---|---|
| **Rye** | 4.5 | 17.0 | 13.6 | *15.309–0.1781W* |
| **Wheat** | 6.5 | 17.8 | 13.5 | *16.261–0.1876W* |
| **Barley** | 4.5-5.9 | 17.4 | 13.4 | *16.914–0.1941W* |
| **Oats** | 4.9 | 16.7 | 12.9 | *16.261–0.1876W* |
| **Straw on average** | 5.0 | 17.4 | 13.5 | – |
| **Millet husk** | 7.0 | 17.8 | 16.86 at humidity of 7.5% | $339C^P+1030H^P-109(O^P-S^P)-25W^P$ |
| **Sunflower husk** | 5.0 | 19.3 | 14.6 | $339C^P+1030H^P-109(O^P-S^P)-25W^P$ |
| **Rapeseed straw (rapeseed)** | 5.9 | 17.0 | 16.0 | *17.520–0.2002W* |
| **Corn stalks and cobs** | 4.6 | 18.0 | 16.5 | *16.261–0.1876W* |
| **Flax shive** | 6.0 | 21.0 | 19.6 | $339C^P+1030H^P-109(O^P-S^P)-25W^P$ |
| **Straw briquettes** | 4.0 | 18.8 | 16.5 | – |

**Table 8.7. Characteristics of coke residue and volatile content in agricultural plant raw materials**

| Type of vegetable raw materials | Characteristics of the coke residue | Volatile content in fuel, % | Temperature of the beginning of the volatile formation process, ˚C |
|---|---|---|---|
| **Straw briquettes** | powdered | up to 80 | 145 – 165 |
| **Corn stalks and cobs** | powdered | 73 – 80 | 115 – 135 |
| **Straw-chaff of grains** | powdered, sintered, porous, original shape | 77 – 82 | 125 – 145 |
| **Sunflower husk** | powdered | 75 – 80 | 165 |

Important characteristics of ash are the rate of recrystallization (slags crystallize

quickly and solidify or solidify slowly, forming a glassy mass) and the length of the melting zone (the interval between melting and spreading temperatures).

All the listed characteristics of ash depend on the size, type and quality of fuel particles, the maximum temperature in the combustion zone; specific heat release, duration of burnout, temperature of gases along the gas path and at the outlet of the corresponding heat engineering equipment; temperature of heating surfaces, etc. Data on the melting point of ash and ash content of vegetable raw materials are given in table 8.8.

**Table 8.8. Ash slagging temperature and ash content of raw materials**

| Type of agricultural plant raw materials | Higher calorific value of raw materials, MJ/kg | Ash content of raw materials, % | Slagging temperature | | |
|---|---|---|---|---|---|
| | | | Deformation start temperature, °C | Softening point, °C | Spreading temperature, °C |
| **Corn stalks and cobs** | 18 | 4.6 | 1,190-1,250 | 1,250-1,320 | 1,320-1,370 |
| **Straw-chaff of grains** | 17.4 | 5 | 1,110-1,160 | 1,180-1,240 | 1,250-1,310 |
| **Straw briquettes** | 18.8 | 4 | 1,150-1,200 | 1,210-1,270 | 1,270-1,340 |
| **Sunflower husk** | 19.3 | 4 | 1,170-1,220 | 1,220-1,230 | 1,230-1,340 |

Comparisons of the calorific and ecological properties of briquetted and granulated straw with traditional fuels indicate in favor of straw. Straw briquettes and pellets have a calorific value of 18.8 MJ/kg which is almost equal to the calorific value of coal ~25 MJ/kg, but significantly lower content of sulfur (0.2%) and ash (4%) when compared to coal (sulfur content – 3%, ash – 35%).

**Questions for self-assessment:**

1. What technologies are available for burning solid biofuels? Describe them.
2. Describe the technological chain of straw use for energy use.
3. Name ways to use grain straw as an energy resource.
4. What types of balers do you know?
5. What are the main characteristics of straw bales?
6. Why is biofuel granulation used?
7. Define the concept of "fuel pellets". Describe the fuel pellets.
8. What are the methods of biomass granulation?
9. Describe the technology of production of fuel pellets rom straw.
10. Describe the technology of production of fuel briquettes from straw.

11. Why is solid biofuels practically neutral in relation to the growth of the greenhouse effect?

12. What is the easiest way to get energy from biomass?

13. What are the advantages and disadvantages of the main methods of obtaining energy from biomass?

14. What types of biomass of agricultural origin are appropriate to use as fuel?

15. What is the most important fuel and technological characteristic of agricultural biomass?

16. Specify the average calorific value of agricultural biomass types.

17. What is the main equipment included in the fuel pellet production line?

18. What is the main equipment included in the fuel briquette production line?

19. What parameters characterize fuel pellets and briquettes?

20. Name the conditions necessary for efficient combustion of biomass in boilers.

21. Specify which groups solid fuel boilers can be divided into based on the specifics of biomass combustion technologies.

22. Specify the features of traditional solid fuel boilers.

23. What types of boilers for burning biomass of agricultural origin are produced in Ukraine?

24. Specify the operation features of automatic boilers.

25. Specify the reasons for selecting the boiler capacity for heating.

26. What difficulties arise when burning plant biomass?

27. What is the gas analyzer designed for?

28. What does the CO content in the flue gases of a solid fuel boiler depend on?

29. Name the main technological operations for preparing grain straw for burning.

**References:**


1. Boiler for burning biomass : pat. 105346 Ukraine : IPC F24H 1/10, F23B 60/00 / O. Ya. Perekhodko, G. A. Golub, V. O. Dubrovin, O. N. Dimitrev, S. M. Kukharets ; applicant and patent owner National University of Life and Environmental Sciences of Ukraine. No. a201310034 ; appl. 12.08.2013 ; publ. 25.04.2014, Bull. No. 8.

2. Dubrovin V. O., Romanchuk L. D., Kukharets S. M., Grabar I. G., Los L. W., Golub G. A., Dragnev S. V., Polishchuk V. M., Kukharets V. V., Nezdvetskaya I. V., Shubenko V. O., Holubenko A. A., Tsyvenkova N. M. Prospects for the development of alternative energy in Polissya of Ukraine. Kyiv : Center for Educational Literature, 2014. 335 p.

3. Golub G. A., Chuba V. V., Tsyvenkova N. M., Marus O. A., Yarosh Y. D. Bioenergy potential of Ukrainian agriculture. *International Journal of Renewable Energy Research*. 2021. Vol. 11, No. 3. P. 1223–1229.

4. Golub G. A., Kukharets S. M., Perekhodko O. Ya. The efficiency of using boilers with upper combustion for burning straw. *Bulletin of the Sumy National Agrarian University. Series: Mechanization and automation of production processes*. 2014. Iss. 11 (26). P. 28–32.

5. Golub G. A., Kukharets S. M., Perekhodko O. Ya., Hrus V. M., Chuba V. V. Research of energy efficiency of boilers with upper combustion. *Technical and technological aspects of development and testing of new equipment and technologies for agriculture of Ukraine*. 2015. Iss. 19 (33). P. 283–288.

6. Golub G. A., Kukharets S. M., Yarosh Y. D., Kukharets V. V. Integrated use of bioenergy conversion technologies in agroecosystems. *INMATEH – Agricultural Engineering*. 2017. Vol. 51, No. 1. P. 93–100.

7. Golub G. A., Lukyanets V. O., Subota S. V. Heat of combustion and conditions of straw burning. *Scientific Bulletin of the National University of Life and Environmental Sciences of Ukraine. Series: Machinery and energy of agro-industrial complex*. 2009. Iss. 134, Part 2. P. 275–278.

8. Golub G. A., Tsyvenkova N. M., Chuba V. V., Yarosh Y. D. Bulk density of chopped wheat straw – influence of moisture content, fine fraction content and coefficient of compaction. *Engineering for Rural Development* : proceedings of the 19th International Scientific Conference, Jelgava, 20–22 May 2020. Jelgava, 2020. P. 1892–1899.

9. Harmonization of biomass resource assessments. Vol. 1 : Best Practices and Methods Handbook / M. W. Vis, D. van den Berg et al. ; Biomass Energy Europe (BEE). [S. l.] : BTG Biomass Technology Group, 2010. 220 p.

10. Kukharets S. M. Analysis of the processes of formation and combustion of generator gas in boilers for burning straw. *Bulletin of Zhytomyr National Agroecological University*. 2014. No. 2 (45), Vol. 4, Part 2. P. 336–344.

11. Kukharets S. M. Increasing the energy autonomy of agroecosystems. Mechanical and technological bases : monograph. Zhytomyr : ZhNAEU, 2016. 192 p.

12. Kukharets S. M. Substantiation of the main parameters of boilers with upper combustion. *Scientific Bulletin of the National University of Life and Environmental Sciences of Ukraine. Series: Machinery and energy of agro-industrial complex*. 2014. Iss. 196, Part 2. P. 238–250.

13. Kukharets S. M., Golub G. A. Obtaining energy from raw materials of agricultural origin. *Scientific Bulletin of Tavria State Agrotechnological University*. 2016. Iss. 6, Vol. 1. P. 80–98.

14. Kukharets S. M., Golub G. A., Perekhodko O. Ya. The use of biomass of agricultural origin as a source of thermal energy. *Agro One* : supplement to the magazine “AgroOne”. 2016. No. 2. P. 14–15.

15. Kukharets S. M., Golub G. A., Skydan O. V., Osypchuk O. Yu. Technical and technological proposals for obtaining energy from raw materials of agricultural origin. *Bulletin of Zhytomyr National Agroecological University*. 2015. No. 2 (50), Vol. 1. P. 369–385.

16. Melnichuk M. D., Dubrovin V. O., Mironenko V. G., Grigoryuk I. P., Polishchuk V. M., Golub G. A., Targonya V. S., Dragnev S. V., Svistunova I. V., Kukharets S. M. Alternative energy : textbook. Kyiv : Agrar Media Group, 2012. 244 p.

17. Subota S. V., Golub G. A., Stepanenko S. P., Lukyanets V. O. Efficiency of using the plant for the production of fuel briquettes from vegetable raw materials. *Mechanization and electrification of agriculture*. 2012. Iss. 96. P. 437–444.

# 9. GROWING AND USING ENERGY CROPS

**Lecture Plan:**

**9.1. Overview of major energy crops 209**
**9.2. Mechanization of cultivation and harvesting of energy crops 217**
**9.3. Fuel characteristics of wood 223**

## 9.1. Overview of major energy crops

Energy crops are plants that are specially grown for use as fuel and for the production of biofuels.

Energy crops are classified according to:

– the growing cycle includes annuals (rapeseed, sunflower) and perennials (willow, poplar);

– type – tree-like (willow, poplar), herbaceous (miscanthus, switchgrass);

– origin – classic, originally intended for energy purposes (miscanthus, lady grass) and ordinary agricultural crops grown both for food production and for the production of biofuels (rapeseed for biodiesel, sugar beet for bioethanol, corn for biogas).

These highly productive groups of plants do not require special material and technical costs for the production of raw materials, are characterized by the possibility of repeated mowing of aboveground biomass during the growing season, high ability to propagate by seeds or vegetatively, resistance to pests, diseases and weeds, and economic efficiency.

In Ukraine, the use of biomass energy is still in its infancy, although the conditions for its development (climate features, the potential of the agricultural sector, the availability of labor and space) are quite favorable.

Analysis of biological resources for the production of biofuels in Ukraine has great potential. To date Ukraine has created one of the largest collections of new and sparsely distributed energy plants for the production of biofuels which includes about 200 taxa that provide a large yield of conventional fuel and energy in terms of energy potential.

Let’s look at some types of energy crops that have prospects for growing in Ukraine.

**Miscanthus** (Miscanthus giganteus). Natural places of origin of plants from the Miscanthus family are the territory of Japan, the Southern Kuril Islands, Manzhuria, Korea, Thailand, Polynesia and the east coast of the United States. It is also grown in Southeast Asia and the Central United States. This genus includes more than twenty different morphological species. Miscanthus sinensis is characterized by particularly fast growth and high quality. In the natural environment, these plants reach a height of up to 6 m, the diameter of the stems is 6 cm, and the vegetation can last up to 30 years (fig. 9.1).

In 1935, the Danish scientist Ansel Olsen brought a Japanese clone to Europe, which became the basis for breeding plants that are still used today. Due to the large harvest, Karl Foster gave this plant the name Miscanthus sinensis “Giganteus”.

Scientific research of this plant began in 1983 at a Plant Breeding Station in Denmark. Since then, intensive research has been carried out with this culture in many European countries, namely Germany, Great Britain, Italy, France, Spain, and Poland.



**Fig. 9.1. Miscanthus plantation**

In Europe, the growing area of miscanthus in 1995-1996 was about 170 hectares, and until 1998, its plantings were insignificant. The largest area of its plantings was in Sweden (300 hectares). In 1993, a European grid was installed in 10 countries and miscanthus cultivation was already carried out in 18 places. Since 1994, major international projects for growing miscanthus have been launched (for example, in Germany by Vaba Oel AG). Miscanthus giganteus is a perennial herbaceous plant with a well-branched root system. The mass of roots before the emergence of seedlings is about 15-25 tons of dry weight per hectare. The roots reach up to 2.5 meters deep into the soil. Such a root system contributes to better use of nutrients and water. The stem is very strong, comose or non-comose, with well-defined nodes. The color is uniform. Due to the high content of lignin and cellulose in the stem, it is characterized by great endurance and resistance to mechanical damage, but there are exceptions when precipitation in the form of snow and rain can lead to local lodging of plants at the level of 4-5 internodes from the ground. In European conditions, plants reach from 200 to 350 cm in height. In the first year of vegetation, plants reach up to 200 cm, in the second year – 350 cm, and in the next – 400-450 cm. The yield of miscanthus is 10-15 t/ha in dry weight.

**Basket willow** (Salix viminalis). Basket willow has a bush or tree from 3 to 5 m high. The branches are erect, rod-shaped. Willow grows along the banks of rivers and

lakes in Polissia, sometimes in the Carpathian region, very rarely in the Forest-Steppe and Steppe. It is grown as a phytomeliorative and energy plant. Usually, for energy purposes, the type of Salix viminalis willow (basket willow) and its derivatives are used. To do this, you can use other types: Salix rigida, Salix amygdalina, Salix pentandra, Salix dasyclados, etc. Basket willow (fig. 9.2) can be grown on different types of soil. When designing the laying of a basket willow plantation, it is necessary to choose the appropriate variety that will give the maximum yield in a short period of time. The yield (cut mass) of energy willow ranges from 10 to 30 tons per ha per year. On dry soils, the growth rate can decrease by up to 50%. For example, to heat a private house with an area of 100 to 200 $m^2$, you need from 3 to 5 tons of such biofuels per season.



**Fig. 9.2. Basket willow**

**Cup plant** (silphium perfoliatum). Sylphium is one of the representatives of the tall grass vegetation of the North American prairies. Its natural range runs in a wide strip along the southern border of eastern Canada. The climate here is Continental, but quite humid. The plant is found on fertile soils in the valley of rivers, along the banks of lakes. The plant has significant plasticity and can be grown in various soil and climatic conditions.

According to its botanical and morphological characteristics, the cup plant is a rhizomatous plant of the Asteraceae family. The root system is powerful, consisting of a thickened main root and numerous lateral ones. The stem is straight, tetrahedral, and hollow, up to 1.8-4 m high. The leaves are elongated-elliptical, pointed, and toothed, up to 30-35 cm long and up to 15-25 cm wide. Inflorescence is an anthode with a diameter of 3-8 cm, flowers are bright yellow.

The fruit is an elongated heart-shaped, flattened brown achene. Weight of 1000 seeds is 18-20 g.

Like sunflower, cup plant was introduced from America to Europe in the XVIII century, where it soon found wide application in landscape gardens and parks in Germany, Austria and Sweden.

Distinguished by the beauty of its shape, perennity, and long flowering, the plant is still successfully used for various purposes. Sylphium grows without replanting, without reducing the yield of biomass for about 20 years. The yield of green mass is 100-120 t/ha or more. In terms of ecological plasticity, Sylphium is the best of all plants. It has valuable biological and economic properties, namely: it effectively uses solar radiation almost equally both in summer, spring and autumn; provides not only high, but also stable yields of green mass with a high content of protein, vitamins, amino acids and minerals. In the budding phase, the yield of green mass is from 50 to 60 t/ha, flowering – from 70 to 80 and fruiting – from 90 to 110 t/ha.

Cup plant refers to perennial herbaceous plants of polycarpics.

The extensive life cycle of the plant consists of cycles of development of monocarpic shoots formed in the underground part of the annually dying stems. The duration of development of each shoot, starting from the second year of plant life, lasts 8-10 months.

Sylphium refers to plants of the winter type of development. In the first year of life, only rosette seedlings are formed and the root system develops intensively. Plants enter the generative phase from the second year.

In spring, sylphium grows relatively early. After the formation of 12-15 rosette leaves, generative stems begin to grow. It takes 25-30 days from regrowth to stemming. From this time on, the growth of sylphium increases and by the budding phase, the daily growth reaches 4-5 cm. Stem growth continues until mass flowering. When mowing plants in the budding phase or at the beginning of flowering, reproductive shoots are again formed from the axillary buds of the lower leaves, which form the crop.

The duration of flowering of each anthode is from 7 to 15 days. Seeds ripen within 35-40 days. From the beginning of the growing season to maturation, 150 days pass.

An important period in the life of the plant is the laying of renewal buds. Buds begin to be laid in the underground part of generative shoots from the second half of summer. In autumn, they grow side shoots that give a rosette of leaves. The development cycle of lateral shoots repeats again. Individual buds begin to grow and form a rosette of leaves only in spring. Plants reach maximum productivity in the third or fourth year of life.

The optimal temperature for plant growth is from 10 to 15°C. Under these conditions, in the presence of moisture, the greatest increase in green mass is observed.

The plant can withstand spring frosts from 4 to 5°C. In the autumn, it vegetates until snow falls and is not damaged by frosts from 5 to 6°C. The leaves die off at 7-8°C. The plant has a relatively high frost resistance.

Sylphium is demanding of light intensity. In natural conditions, it occupies the first tier of highly digestive associations. When there is a lack of light, plants are

strongly depressed.

Sylphium is a moisture-loving plant and is a typical mesophyte. It withstands 10-15-day flooding. The increased moisture requirements are probably due to the surface distribution of the root system in the soil. When there is a lack of moisture, the growth of sylphium slows down. Compared to other perennial crops, sylphium is most sensitive to soil and air droughts.

In the conditions of the Forest-Steppe and Polissia of Ukraine, sylphium grows from 2.3 to 3 m tall. The stem is straight, well covered with leaves, thick, four- and six-sided (fig. 9.3).



**Fig. 9.3. Cup plant**

**Sorghum** (fig. 9.4.) has been known for several millennia. The centers of its origin are considered India and China, from where it was imported to other countries. In Africa, China, and India, sorghum was considered a grain of bread, as it was used to make flour and bake bread cakes. Today, sorghum is more widely used as a feed crop, which perfectly replaces corn, a source of bioethanol production, papermaking, etc.

Until the 1980s in Ukraine, sorghum of all types (sugar, broomcorn, grain) was actively used in the diets of feeding farm animals, poultry and fish. Since the beginning of the 90s, sorghum production has fallen. In 1990, Ukraine produced 24 thousand tons, and in 1995 – only 9.3 thousand tons of sorghum.

In recent years, sorghum has become an increasingly popular crop in Ukraine due to its high drought resistance and stable export demand. Currently, two types of cultivated sorghum are common in Ukraine: common sorghum (S. vulgare Pers.) and grass sorghum or Sudan grass (S. sudanense Pers.).

Sorghum – is a genus of annual and perennial plants in the Gramineae family, covering up to 50 wild and cultivated species distributed mainly in tropical and subtropical countries. According to its biological characteristics, sorghum is a heat-loving and drought-resistant crop. It can withstand not only soil, but also air droughts and dry winds. The high drought resistance of this crop is determined by a highly

developed root system, a high ability to absorb moisture and a feature of the assimilation apparatus. The work of the sorghum leaf apparatus resumes simultaneously with leaf turgor even after 12-14 days of drought, while in corn the assimilation apparatus is damaged after a seven-day drought.



**Fig. 9.4. Sorghum**

The leaves and stem of sorghum are covered with a waxy coating, which reduces evaporation. Sorghum uses 1.5-2.0 times less water to form a crop than other cereals, which gives it great advantages when growing in an area with limited moisture resources.

Sorghum seeds begin to germinate at a temperature of 10-12°C, the optimal development temperature is 32-35°C. Young plants are damaged even by short-term minor frosts. Sorghum is a plant of short daylight hours. It is more drought-resistant than corn. Although sorghum is a drought-resistant plant, however, under irrigation conditions, its yield increases significantly. Sorghum is low in soil fertility. Its yield on sandy and saline soils in arid areas and on light black soils and heavy clay soils is significantly higher than that of other forage crops.

Cuba grass or Aleppo grass (Sorghum halepense (L.) Pers.) is distributed as a perennial root-growing weed in Central Asia and Transcaucasia, and is a quarantine species of Ukraine. The main harm of Aleppo grass is caused by its powerful root system, which greatly complicates high-quality tillage. With a significant blockage, it

is almost impossible to clear the fields of rhizomes. Aleppo grass is a poisonous plant; young shoots contain toxic cyanide compounds that can cause poisoning and even death of livestock. It is resistant to diseases and pests.

The root system of sorghum is fibrous, highly developed, penetrates the soil by 150-200 cm. Aerial roots are formed on plants. Due to the good development of the root system, sorghum grows on various types of soils, such as solonetzic soils.

The stem is thinner than that of corn. Depending on the variety and growing conditions, its height can be from 1 to 3 m. In tropical areas, the height of plants reaches 6-7 m. The stem, filled with a core, bushes, forming up to 5-6 branches. The leaves are wide (there are from 10 to 50 of them on one plant), covered with a waxy coating. Inflorescence is panicle. Sorghum is a cross-pollinated plant, but self-pollination is also possible in arid areas.

Sorghum grain is filmy or glabrous, rounded, ovate or elongated in shape, of various colors – white, yellow, red, brown. The weight of 1000 grains is 25-40 g or more.

Recently, the cultivation of this crop is quite a topical issue, because the interest in processing sugar cane has increased in addition to direct use for feed and food purposes to obtain sugar-containing products (sugar, food syrup, honey), besides, after removing juice and harvesting grain, sorghum residues under certain conditions can be used as an alternative source for the production of solid biofuels (bio butanol, biogas, fuel pellets, biosynthesis-gas, bio oil, etc.), because the yield of sorghum by biomass reaches 20-25 tons of dry weight per hectare.

At a humidity of 15-20%, the energy value during the combustion of sorghum residues is 10-12 MJ/kg. The use of granulation and briquetting technologies can improve the energy performance of biomass residues.

**Pennsylvania mallow** (Pennsylvania fiscellam). This powerful, tall (up to 4 m) perennial plant with maple leaves is native to North America. In natural conditions, this type of mallow grows well on flooded riverbanks, along roadsides, on sandy and even stony soil. The high-protein green mass of sida is used as livestock fodder and to produce sugar (51.9% sucrose). In addition, it is a medicinal and honey-bearing plant. The biomass of this crop is a promising source of renewable energy (fig. 9.5).

In terms of heat generation during burning, mallow stems are second only to beech wood (by 20-34%). In Europe, it is called the Pennsylvania mallow, and sometimes sida. Sida species is a perennial plant. The yield of its green mass is from 40 to 100 t/ha.

All forms and varieties of sida can grow in one place for up to 20 years, forming perennial plantations. The plants are tall, with stems ranging in height from 250 to 400 cm. Operation of sida plantations can be started from the second year of the plant's life. The stems are erect, very stable and do not require a garter.

By the end of the growing season, the mallow stalk becomes rough and lignified. On it, there are an average of 45-46 nodes, on which, starting from 11-20 nodes, side shoots of the first order are formed from below. Due to the different ratio of the size of the side shoots and the angle of placement on the main shoot, the habit of plants changes – from compact to branched.

Sida is frost-resistant, sometimes after the first severe frosts the plant dies off,

but in the spring, it grows back, because the renewal buds overwinter below the soil surface. At the beginning of autumn frosts, thickened perennial roots, along with the base of the stem, are drawn into the soil. In spring, after the snow melts and with an increase in temperature to +5°C, the renewal buds begin to develop, and in the first decade of April, the shoots come to the surface. Further, the plant develops normally, forms a full-fledged crop of aboveground mass and physiologically mature seeds.



**Fig. 9.5. Pennsylvania mallow**

In the first year of ontogenetic development of plants, separate organs of a perennial organism are formed. Despite this, sida manages to form a significant amount of aboveground phytomass, especially from the stemming phase to the budding period. It is at this time that it increases the biomass of more than 7 t/ha. At this stage, its development in the first year of life is completed. In the second and subsequent years of life, the seed significantly increases the yield of aboveground mass in all phases of development, by almost 200%, and reaches a maximum in the fruiting phase.

**Paulownia** (fig. 9.6). This fast-growing deciduous flower tree is native to Japan. It was described and classified by the German naturalist and explorer Philipp Siebold

in the first half of the 19th century. The tree is named after Anna Pavlovna, daughter of Emperor Paul I, who financed the expedition.



**Fig. 9.6. Intense forest from paulownia**

In addition to the mentioned energy plants, there are a number of others. For example: switchgrass, poplar. Reeds also have a high-energy potential of 1 million standard fuel.

The first trees of this species in Europe were planted in Holland in 1830. The annual growth of paulownia is 3-5 m, and in five years, the height reaches a maximum of 20 m. In the spring, paulownia blooms incredibly beautifully, which attracts bees, and therefore placing an apiary near the plantation will bring additional profit. In addition, paulownia honey is fragrant and transparent, similar to Acacia, and has medicinal properties.

## 9.2. Mechanization of cultivation and harvesting of energy crops

Before planting energy plants, deep plowing is done, under which a large dose of organic fertilizers is used. Also, in early spring, before planting, it is necessary to control weeds (taking into account the late planting period) by mechanical or chemical means. Just before planting the plants, the soil must be loosened a few centimeters deep. Mechanization of the process of planting energy plants significantly reduces the cost of growing it. Seedlings obtained from microclonal propagation can be planted using a special seedling planter (fig. 9.7). Miscanthus seedlings obtained from the division of the rhizome can be planted with a potato planter. In the conditions of Ukraine, the mechanized method of planting can be carried out using existing planting equipment using potato planters of domestic and foreign production, which provide a row spacing width of 70 to 75 cm (fig. 9.8).




**Fig. 9.7. Planting energy willow seedlings using a special planter**



**Fig. 9.8. Planting miscanthus rhizomes with a potato planter**

Energy willow is also planted in the spring work begins as early as possible, so that the deadline for planting is the last days of April. Immediately before planting seedlings, harrowing or rolling should be carried out, as well as spraying the field with herbicides. In order for the plantation to be driven by a tractor, the willow is planted in rows with a distance of 70 cm in the aisles and from 45 to 48 cm between the plants in

a row. Another scheme is to grow willow in pairs of rows. At the same time, the distance between seedlings in a row is from 30 to 35 cm, between two rows – 70 cm, and between pairs of rows – 150 cm.

In the natural and climatic conditions of Ukraine, the optimal number of willow seedlings planted on one hectare is 28-40 thousand pieces, although for different needs their number can range from 15 to 50 thousand trees.

It is important to carry out timely and high-quality operations to care for plantings on the plantation, because areas with shoots are quickly overgrown with weeds, to which the willow is poorly competitive during the period of rooting and regrowth of shoots. Care is aimed at destroying weeds, improving soil aeration and retaining moisture in it. The number of treatments during the growing season depends on the infestation of the plantation with seeds and rhizomes of weeds, forest and plant conditions, weather, as well as on the age of the plantation. During the first growing season, it is recommended to carry out at least five treatments. In the following years, the number of careings decreases and they are carried out as needed. Willow plants become extremely competitive with respect to weeds even after cutting for processing, as the shoots develop rapidly due to a well-developed root system, so from about the fourth year of cultivation, care is reduced to one-time mechanized care, carried out in the spring, until shoots appear in the rows cut in the autumn-winter period.

With the mechanized method of planting miscanthus, the formula 70x70 cm, or 75x75 cm, is used. Seedlings from rhizomes are plowed to a depth of 15 to 20 cm. After planting, you should immediately roll up with a smooth roller and, if necessary, irrigate.

Part of the energy cult, such as sylph or sorghum, is sown with vegetable or grain-grass seeders. The width of row spacing is mainly determined by the available complex of machines, and is 45, 60 or 70 cm.

Sorghum is sown to a depth of 3.5 cm (up to a maximum of 7 cm on light soils) in moist soil, and the sowing density of 160-200 thousand seeds per hectare is strictly observed (to obtain a final density of 120 thousand/ha). The width of row spacing depends on the equipment used and can be 21-70 cm, depending on the growing conditions of the crop. On the same day, soil herbicides (Primextra Gold 3.5 l/ha) are also sprayed to control annual and dicotyledonous annual weeds. Harrowing with medium harrows is carried out in order to earn herbicides in the soil and loosen the top layer to close moisture. On the 3rd-7th day, repeated harrowing is carried out with light or spring harrows to destroy the crust on the soil surface (moisture close) and control weed shoots.

For some types of energy crops, it is necessary to carry out row-to-row cultivation using row-to-row cultivators.

For mallow, as a perennial crop, the preparation of the field before planting the plantation is of particular importance. The first step is to ensure the uniformity of sowing seeds, their number, taking into account germination. Young mallow plants need a lot of light for normal growth and are therefore very vulnerable to weeds. The field for sowing should be cultivated and not covered with a crust. No measures should be taken before developing reliable and effective methods of chemical weed control. In subsequent years, weeds are no longer so dangerous, since the mallow develops a

large green mass, and effectively destroys them itself. Pennsylvania mallow can reproduce equally both generatively (through seeds) and vegetatively and through different parts of the plant: seedlings, leaves and roots.

Sowing is one of the most important techniques when growing mallow. The optimal time for sowing Pennsylvania mallow is April. The wide distance between rows (60-70 cm) facilitates the cultivation procedure in subsequent years. Seeds can also be sown in March in nurseries, or on pallets and planted in April or May. Given the small size of the seeds, the depth of their planting should not exceed 1-1.5 cm.

It is possible to sow seeds using conventional grain or beet seed drills with a seeding rate of 5-6 kg/ha. When sowing Mallow with a grain planter, you need to mix the seeds with sawdust or other similar material earlier in order to evenly sow small seeds. The appearance of new agricultural machinery on the markets also creates other opportunities for proper sowing of mallow.

Harvesting of miscanthus is carried out during the dormant period of plants, after the outflow of plastic substances into the root system and the fall of leaves, when the humidity of the stems is minimal (in March).

Miscanthus is collected both separately and directly. With the separate method, they are mowed into rolls with reapers. Moreover, the height of the cut of plants should be at least 15-20 cm. Roll selection is carried out using a press with twine or net binding. It is advisable to use roll balers or grinding balers (fig. 9.9).



**Fig. 9.9. Mowing and baling of herbaceous energy crops**

The direct harvesting method uses self-propelled forage harvesters, similar to those used for harvesting corn for silage (fig. 9.10). Such machines cut rows of plants, grind them into wood chips and load them into a trailer. The crushed or baled mass is transported to the storage site for further processing into pellets.

Transportation can be carried out by cars and tractors with trailers. Similarly, other herbaceous energy plants are collected.



**Fig. 9.10. Harvesting of herbaceous energy crops by forage harvester**

Energy willow biomass is collected every year, or in two or three years. However, it is most advantageous to cut willow every two years, which is explained by the fact, that willow in the third year of its growing season has the greatest increase in biomass. On one plot, willow can be grown for 25 to 30 years. Manual harvesting of willow biomass consists of mowing willow shoots using a mechanical scythe or chain saw. Instead, mechanical harvesting is carried out using special combine harvesters or mowers, which, when harvesting biomass, immediately grind it and load it into tractor trailers or trucks (fig. 9.11).

Sometimes willow is harvested using special sheaf-binding harvesters. The collected and crushed biomass is used as fuel for boilers, or as raw materials for the production of fuel pellets or briquettes. Other tree-like energy crops are harvested in a similar way.

After harvesting, energy crops can be used to produce various types of biofuels, and later thermal and electrical energy (fig. 9.12).

Collecting mallow for seeds can be combined with collecting stems intended for energy purposes. The collection period is quite long and depends on climatic conditions; the condition of the soil due to the use of machines, etc. The optimal collection period is considered to be the end of September-October (after the first frost).




**Fig. 9.11. Mechanized harvesting of tree-like energy crops**

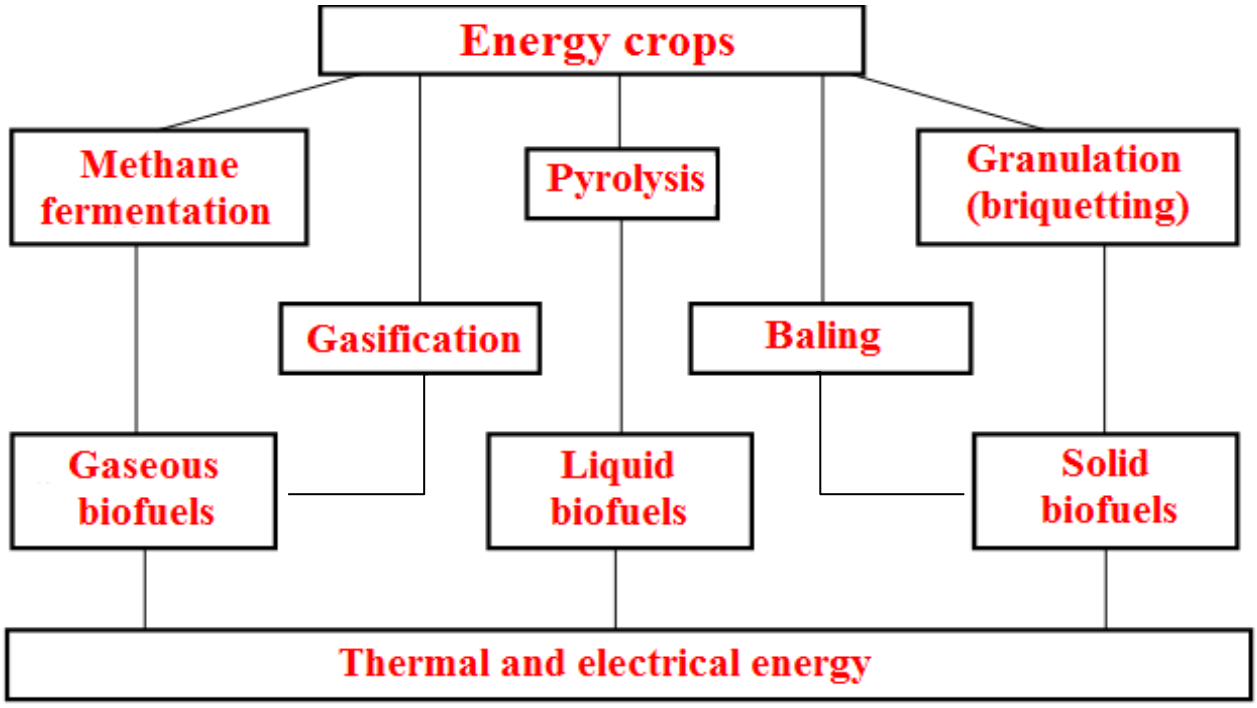


**Fig. 9.12. Methods of using energy crops in agricultural production**

The main characteristics of some types of energy plants are given in table 9.1.

Even with a very late harvest period (December), there is no need to worry about large losses in the seed crop due to their weak sprinkling. The December harvest period refers to the cultivation of mallow, for example, in places with sufficient precipitation,

or on the territory of so-called lagoons where wastewater is collected. In such conditions, the use of machines for collecting mallow stems is possible only after the soil freezes.

**Table 9.1. Main characteristics of some types of energy crops**

| Type | Average yield, t/ha/year | Lowest calorific value, GJ/t | Energy output, GJ/ha/year |
|---|---|---|---|
| **Willow** | 15 | 16 | 240 |
| **Miscanthus** | 20 | 17 | 340 |
| **Sorghum** | 25 | 18 | 450 |

According to the concept of growing energy crops in Ukraine, their area will increase from 3 thousand hectares in 2014 to 200 thousand hectares in 2020.

### 9.3. Fuel characteristics of wood

Wood is characterized by a low ash content, and the latter has a high melting point. This is important when operating boilers of conventional design. The scheme of classification of wood fuel by origin is shown in fig. 9.13.

The combustion process is significantly influenced by the moisture content of wood, the size and uniformity of pieces, which determines the calorific value of the fuel.

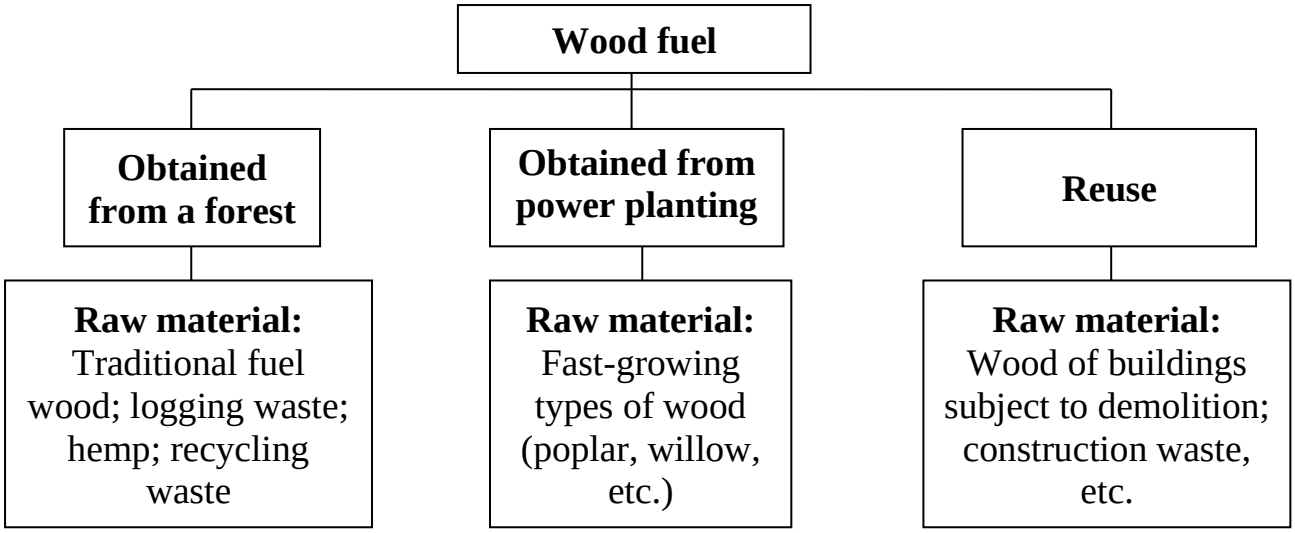


**Fig. 9.13. Classification of wood fuel into types by origin**

Like all types of solid biofuels, wood consists of a combustible part and ballast, which consists of moisture and ash. The combustible part (without moisture) and ash form a dry mass of fuel (fig. 9.14).

The elemental composition of wood in percentage per dry weight is given in table 9.2. The elemental composition of wood fuel includes three main chemical components: carbon (*C*), hydrogen (*H*) and oxygen (*O*), forming a total of about 99%

of the dry weight, the rest are nitrogen (*N*), sulfur (*S*) and heavy metals.

The moisture content of fuel is determined in percentage by weight of wet fuel (*WF* index). The ash content is determined in percentage by weight of dry fuel (*DM* index). The content of volatile components is in percentage of the fuel mass (*CM* index).

**Table 9.2. Elementary wood composition**

| Element, % per dry weight | Wood | Bark |
|---|---|---|
| **C** | 48 – 50 | 51 – 66 |
| **H** | 6.0 – 6.5 | 5.9 – 8.4 |
| **O** | 38 – 42 | 24.3 – 40.2 |
| **N** | 0.5 – 2.3 | 0.3 – 0.8 |
| **S** | 0.05 | 0.05 |
| **Cl** | <0.01 | 0.01 – 0.03 |

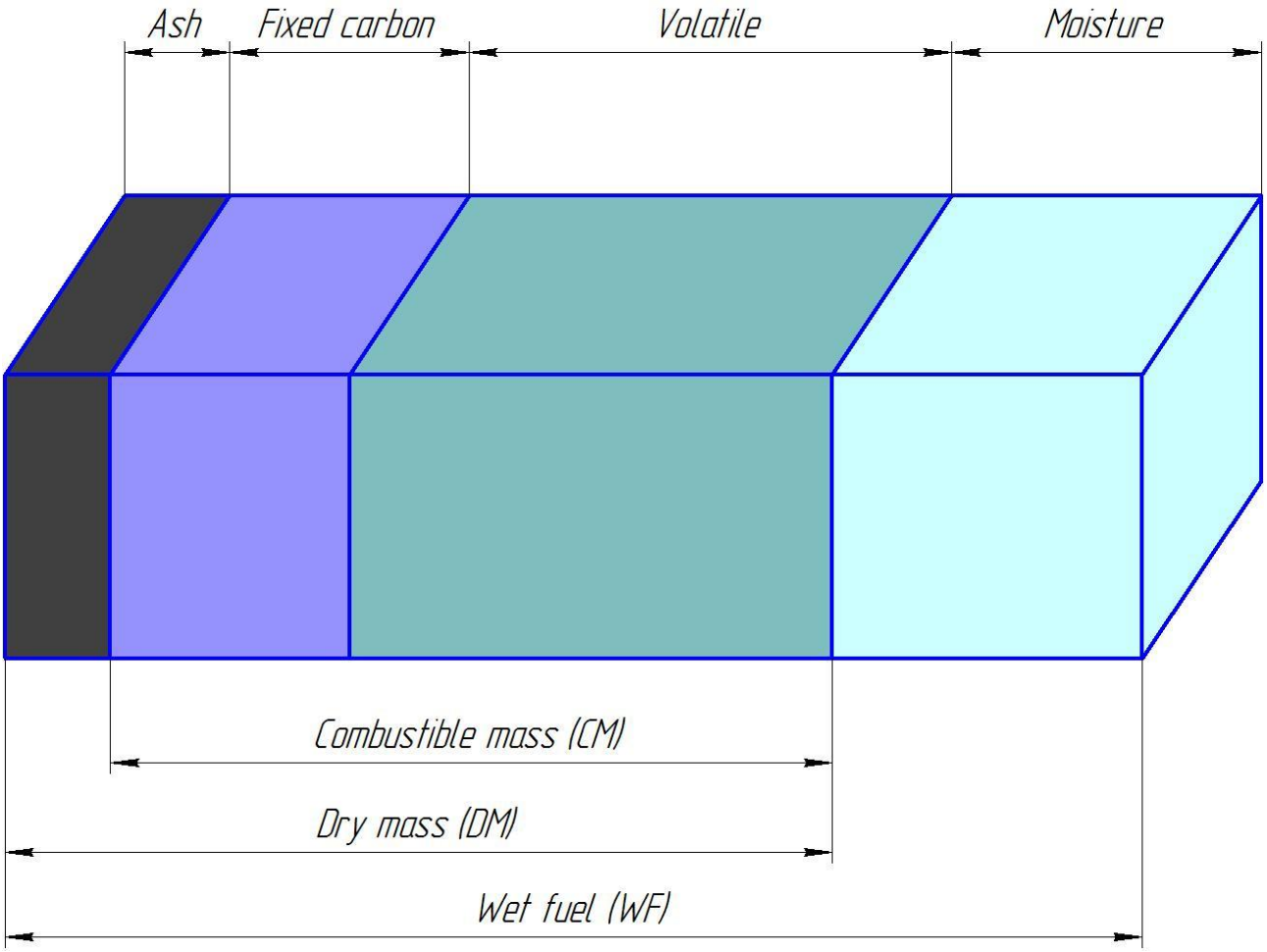


**Fig. 9.14. Solid fuel component composition**

Since the moisture content in the fuel is a variable value, the content of ash and volatile components in the fuel in the reference tables is indicated in percentage per dry weight.

The ash and dry mass content is related to the ratio:

$$A^{DM} = A^{WF} \frac{100}{100-W}, \quad (9.1)$$

where $A^{DM}$ – ash content in the dry mass of fuel, %; $A^{WF}$ – ash content in wet fuel, %.; $W$ – relative humidity of the fuel, %.

The relative humidity of the fuel is calculated using the formula:

$$W = \frac{g_1 - g_2}{g_2} 100\%, \quad (9.2)$$

where $g_1$, $g_2$ – fuel weight before and after drying, respectively, kg.

The humidity of wood depends on various factors such as: time of year, growing region, type of tree, etc. interestingly, the humidity of different parts of the tree also differs. So, for example, if we consider pine, the humidity per working mass is: trunk – from 45 to 50%; branches – from 50 to 56%; top – 60%; bark – from 36 to 67%.

During drying, first of all, free moisture is removed from the material, then cellular moisture, the evaporation of which changes the physical properties of the material. The material decreases in volume, that is, it shrinks. During drying in the field, the humidity of wood reaches from 20 to 25% and this material is called air-dry. Drying ensures that the humidity of the material is balanced with the humidity of the environment. At temperatures from 18 to $22^0$C in closed rooms, wood dries to a humidity of 8 to 15%.

Measurement of the content of volatile substances is carried out according to a standardized method, which consists in heating the fuel sample in the air to $(900\pm10)^0$C until the fuel is completely burned. The difference in the mass of fuel before and after combustion (similar to determining the relative humidity of fuel) determines the content of volatile substances and is expressed in percentage of the dry or combustible mass.

The content of bound carbon and its content in the composition of volatile substances is determined by the ratio of the heat that is released in the volume of the gasification chamber to the amount of heat in the hot fuel layer. Since the yield of volatile substances in biofuels is quite high (80-90%), most of the heat during their combustion is released in the gasification chamber. Therefore, for their complete combustion, it is necessary to develop appropriate air supply systems to the gasification zone and maintain proportional relationships between the geometric dimensions of this chamber.

The content of bound carbon in fuel is calculated based on the content of volatile substances as the share of the combustible mass after the release of volatile substances and expressed in percentage:

$$C^C_{CM} = 100 - V^V;$$
$$C^C_{DM} = 100 - A^{DM} - V^V;$$
$$C^C_{WF} = 100 - A^{WF} - W - V^V, \quad (9.3)$$

where $C^C_{CM}$ – content of bound carbon in the fuel combustible mass, %; $C^C_{DM}$ – bound carbon content in dry fuel mass, %; $C^C_{WF}$ – bound carbon content in wet fuel, %; $V^V$ – content of volatile components in fuel, %.

For different types of fuel, the minimum possible ash content and moisture content at which the highest efficiency value is provided in the production of generator

gas are shown in table 9.3.

The fuel ash content indicator provides a total assessment of fuel quality based on calorific value and ballast content. Reducing the ballast content in fuel improves its quality. To create the best conditions for the gasification process, the fuel must have a certain minimum moisture content. Excessive reduction of fuel humidity reduces the amount of generator gas produced and its calorific value.

**Table 9.3. The minimum possible ash content in the fuel and the value of fuel humidity, which ensures the highest value of the efficiency of the gas generator**

| Fuel type | Content, % | | Efficiency of the gas generator, $\eta$ |
|---|---|---|---|
| | $A^{WF}$ | $W$ | |
| **Birch wood chocks** | 0.7 | 18 | 71.0 |
| **Birch charcoal** | 0.9 | 10 | 89.0 |
| **Top peat** | 4.0 | 30 | 59.5 |
| **Peat briquettes** | 5.0 | 15 | 78.4 |
| **Peat coke** | 6.0 | 8 | 84.1 |
| **Agricultural waste briquettes** | 5.0 | 12 | 76.5 |
| **Soft wood pellets** | 0.5 | 10 | 83.8 |
| **Solid wood pellets** | 0.4 | 8 | 84.3 |

In addition to carbon, hydrogen and sulfur, the fuel mass includes nitrogen and oxygen. Each percentage of nitrogen contained in the fuel's combustible mass reduces its calorific value by 1%. The nitrogen content in the combustible mass of solid fuel is usually in the range from 1 to 2%, so the nitrogen content slightly affects the quality of generator gas.

Each percentage of chemically bound oxygen contained in the fuel combustible mass reduces the calorific value of the fuel combustible mass by 110 kJ/kg (table 9.4). The percentage of bound carbon in fuel biomass increases during its rotting, as a result of which the caloric content of fuel decreases, which leads to the introduction of requirements for storing raw materials in fuel biomass standards.

Calorific value is the amount of heat that is released during the combustion of a single mass of fuel. They are determined the highest and lowest calorific values of fuel.

When calculating the highest calorific value of fuel, the assumption is introduced that water vapor entering the generator gas as a product of hydrogen combustion and from the fuel's moisture completely condenses. The indicator of the lowest calorific value of fuel does not contain the heat of condensation of water vapor. The difference between the value of the highest and lowest calorific value of a fuel depends on its humidity and hydrogen content. For the basic indicator for determining the calorific value of fuel, the following can be used: mass of wet (*WF*) fuel; mass of dry (*DM*) fuel; mass of the combustible part (*CM*) fuel.

According to the biofuel consumer handbook published by Tallinn Technical University, the following ratios were obtained between the highest and lowest calorific value of fuel:

$$Q_H^{WF} = Q_H^{DM}(1 - W/100); \quad (9.4)$$

$$Q_H^{DM} = Q_H^{CM}(1 - A^{DM}/100); \quad (9.5)$$

$$Q_L^{DM} = Q_H^{DM}(1 - 2.442 \cdot 8.936 \cdot H^{DM}/100); \quad (9.6)$$

$$Q_L^{WF} = Q_H^{DM}(1 - W/100) - 2.442 \cdot W/100); \quad (9.7)$$

$$Q_L^{WF} = Q_H^{WF} - 2.442 \cdot \left[\frac{8.936 \cdot H^{DM}}{100} \cdot (1 - W/100)\right] + \frac{W}{100}), \quad (9.8)$$

where $Q_H^{WF}$, $Q_L^{WF}$ – respectively, the highest and lowest calorific value of wet fuel, MJ/kg; $W$ – fuel humidity, %; $Q_H^{DM}$, $Q_L^{DM}$ – respectively, the highest and lowest calorific value of the dry mass of fuel, MJ/kg; $Q_H^{CM}$ – higher calorific value of the combustible mass of fuel, MJ/kg; $H^{DM}$ – hydrogen in the dry mass of fuel, %.

**Table 9.4. Dependence of the calorific value of the fuel mass of the fuel and the temperature in the oxidation zone of the gas generator on the oxygen content in the fuel**

| Fuel | Composition of the combustible mass of the fuel | | | | | Content of volatile components in fuel, $V^V$, % | Lower calorific value, J/kg | Temperature in the oxidation zone of the gas generator $t_{max}$,°C |
|---|---|---|---|---|---|---|---|---|
| | $W$ | $C^{CM}$ | $S^{CM}$ | $O^{CM}$ | $N^{CM}$ | | | |
| **Firewood** | 6.1 | 51.0 | 0 | 42.3 | 0.6 | 85 | 14,235 | 1,980 |
| **Peat** | 6.0 | 57.8 | 0.3 | 33.4 | 2.5 | 70 | 13,440 | 2,050 |
| **Brown coal** | 6.1 | 69.5 | 4.5 | 19.0 | 0.9 | 61 | 19,845 | 2,090 |

A lower calorific value of fuel should be used to evaluate gas-generating fuels. Based on the practice of gasification and theoretical generalizations, it is known that the moisture content and the minimum possible ash content for different types of fuel vary within the limits specified in table 9.5.

According to the calorific value, all types of fuel can be divided into five groups (table 9.6).

For wood, the lowest calorific value of fuel, depending on the moisture content, is determined by the formula:

$$Q_L^{WF} = \frac{Q_L^{DM} \cdot (100 - W) - 2442 \cdot W}{100}, \quad (9.9)$$

where $Q_L^{DM}$ – lower calorific value of dry fuel kJ/kg.

With a variable ash content in the fuel (for example, herbaceous waste of agricultural production – straw, tops, etc.), the lowest calorific value of fuel is calculated by the calorific value of the combustible mass of fuel using the formula:

$$Q_L^{WF} = \frac{Q_L^{CM} \cdot [100 - (A^{WF} + W) - 2442 \cdot W]}{100}. \quad (9.10)$$

Although the ash content of solid biofuels is low, the ability of ash to melt directly affects the operation of any heating equipment (pyrolysis boiler, gas generator set, dryer furnace, etc.). Melting of ash causes slagging of furnaces and gasification chambers, as well as the appearance of dense deposits on convective heating surfaces.

**Table 9.5. Comparative characteristics of solid fuels in terms of the ratio of the lowest calorific value of fuel to the highest**

| Fuel | $Q_H^{CM}$, J/kg | Ballast content, % | | $Q_L^{WF}$, J/kg | $\frac{Q_L^{WF}}{Q_H^{CM}}$ |
|---|---|---|---|---|---|
| | | $A^{WF}$ | $W$ | | |
| **Birch wood chock** | 20,097 | 0.80 | 20.0 | 14,277 | 0.710 |
| **Pine wood chock** | 20,448 | 1.10 | 20.0 | 14,235 | 0.696 |
| **Birch pile charcoal** | 32,238 | 1.22 | 7.0 | 28,721 | 0.891 |
| **Wood birch stove coal** | 26,502 | 0.90 | 7.0 | 23,689 | 0.894 |
| **Peat briquette** | 22,441 | 5.00 | 15.0 | 17,585 | 0.784 |
| **Peat coke** | 34,353 | 6.0 | 8.0 | 28,897 | 0.841 |
| **Briquetted straw** | 21,060 | 5.0 | 12.0 | 16,111 | 0.765 |
| **Soft wood pellets** | 18,027 | 0.5 | 10.0 | 15,109 | 0.838 |
| **Solid wood pellets** | 20,168 | 0.4 | 8.0 | 16,997 | 0.843 |

To determine the melting index of ash, there are a number of standards: ASTM D 1857, ISO 540 and DIN 51730. According to the ASTM D 1857 standard, the change in the shape of a standard ash cone is measured when it is heated in an oxidizing medium (fig. 9.15).

**Table 9.6. Classification of solid fuels by their calorific properties**

| Fuel group | Gas generator efficiency value, $\eta$ | Fuel quality |
|---|---|---|
| **I** | higher than 90 | Excellent |
| **II** | from 85 to 90 | High |
| **III** | from 80 to 85 | Good |
| **IV** | from 65 to | Satisfactory |
| **V** | lower than 65 | Low |

The ability of wood ash to melt can vary widely depending on the type of wood, the impurities that enter the fuel, the place of cultivation, the time of year, and even the part of the tree. The ability of ash to melt varies within the following limits:

- initial deformation IT=1,150 – 1,490°C;
- softening temperature ST=1,180 – 1,525°C;
- hemisphere formation temperature HT=1,230 – 1,650°C;
- flowing temperature FT=1,250 – 1,650°C.

Data on the melting capacity of fuel for certain types of fuel are given in

table 9.7.

If for the bark of wood, the softening temperature is usually high (above 1,500°C) and does not cause slagging of the furnace, gasification chamber, tuyeres, grate, etc., then for wood ash it is much lower, which requires compliance with the combustion regime to prevent slagging.

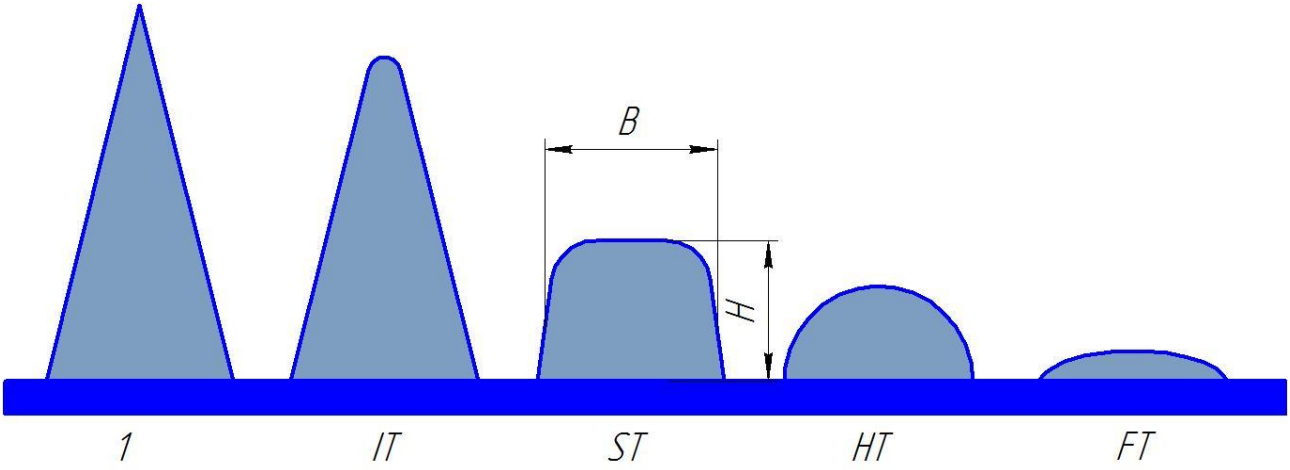


1 – initial state, before heating, the tip of the cone is sharp; IT – initial deformation, the sharp tip of the cone is rounded; ST – softening temperature, the ash cone is flattened in such a way that the value of the forming decreases to the diameter (H=B); HT – hemisphere formation point, the cone turns into a hemisphere (H=B/2); FT – surface flowing point

**Fig. 9.15. Changing the shape of a standard cone when it is heated**

**Table 9.7. Ability of ash to melt**

| Fuel | Ash melting point, °C | | | |
|---|---|---|---|---|
| | IT | ST | HT | FT |
| **Pine wood chips** | 1,210 | 1,225 | 1,250 | 1,275 |
| **Wood chips of logging waste** | 1,175 | 1,205 | 1,230 | 1,250 |
| **Pine sawdust** | 1,150 | 1,180 | 1,200 | 1,225 |
| **Spruce bark** | 1,405 | 1,550 | 1,650 | 1,650 |
| **Pine bark** | 1,340 | 1,525 | 1,650 | 1,650 |

The melting point of ash depends on its mineral composition; minor differences in composition significantly affect the melting characteristics. Rapid sample analysis is used to determine the melting point of ash. The method consists in burning fuel samples weighing 2 kg on a clean grate of a gas generator, followed by visual control of the slagging process. Since in practice the low melting point of ash leads to varnishing and subsequent failure of structural elements, the use of the express method will allow calculating the required temperature regime of the working area for each type of biomass.

## Questions for self-assessment:

1. What types of energy plants do you know and what energy crops are common in Ukraine?
2. How are energy crops classified?
3. What energy crops are called herbaceous?
4. What energy crops are called tree crops?
5. What are the main characteristics of energy crops?
6. Name the main characteristics of miscanthus.
7. Name the main characteristics of the energy willow.
8. Describe such an energy crop as the sylphium.
9. Name the main characteristics of sorghum.
10. What methods of planting energy crops do you know?
11. What machines are used for planting energy crops?
12. What are the features of caring for energy crop plantations?
13. Name the methods of harvesting energy crops.
14. How energy crops affect the efficiency of agricultural production.
15. What machines are used for harvesting energy crops?
16. What are the main areas of energy crops use?
17. What types of biofuels can be obtained on the basis of energy crops in Ukraine?
18. What are the advantages and disadvantages of growing energy crops in agricultural production?
19. What is a mapping of energy raw material potential placement?
20. How to calculate the coordinates of the effective location of a fuel pellet production enterprise?
21. How is the ash content of the working mass of fuel determined?
22. How is the content of bound carbon in fuel determined?
23. How is the lower calorific value of the working mass of wood determined depending on the moisture content?

## References:


1. Dubrovin V. O., Romanchuk L. D., Kukharets S. M., Grabar I. G., Los L. W., Golub G. A., Dragnev S. V., Polishchuk V. M., Kukharets V. V., Nezdvetskaya I. V., Shubenko V. O., Holubenko A. A., Tsyvenkova N. M. Prospects for the development of alternative energy in Polissya of Ukraine. Kyiv : Center for Educational Literature, 2014. 335 p.
2. Geletukha G. G., Zheliezna T. A., Tryboi O. V. Prospects for the growing and use of energy crops in Ukraine. *Analytical note of the Bioenergy Association of Ukraine*. 2014. No. 10. 30 p.
3. Golovchenko N. M., Dankevich V. Ye., Dobryakova S. V., Dubrovin V. O., Zimina G. R., Zinovchuk V. V., Zinovchuk N. V., Karpyuk V. M., Kukharets V. V., Kukharets S. M., Rashchenko A. V. Recommendations for the establishment of an agricultural service cooperative for the provision of services in the production and sale of biofuels in the Zhytomyr region. Zhytomyr, 2011. 96 p.

4. Golub G. A. Energy Autonomy of Agricultural Systems. *Bulletin of Agricultural Science*. 2010. No. 3. P. 50–54.

5. Golub G. A., Chuba V. V., Tsyvenkova N. M., Marus O. A., Yarosh Y. D. Bioenergy potential of Ukrainian agriculture. *International Journal of Renewable Energy Research*. 2021. Vol. 11, No. 3. P. 1223–1229.

6. Golub G. A., Dubrovin V. O. Engineering problems of production and use of biofuels in agro-industrial complex. *Bulletin of Agricultural Science*. 2010. Special issue. P. 82–87.

7. Golub G. A., Dubrovin V. O., Marus O. A. Problems of technical and technological support of energy autonomy of agroecosystems. *Technical and technological aspects of development and testing of new equipment and technologies for agriculture of Ukraine*. 2012. Iss. 16 (30), Vol. 2. P. 339–345.

8. Golub G. A., Kukharets S. M., Yarosh Y. D., Kukharets V. V. Integrated use of bioenergy conversion technologies in agroecosystems. *INMATEH – Agricultural Engineering*. 2017. Vol. 51, No. 1. P. 93–100.

9. Golub G. A., Tsyvenkova N. M., Chuba V. V., Yarosh Y. D. Bulk density of chopped wheat straw – influence of moisture content, fine fraction content and coefficient of compaction. *Engineering for Rural Development* : proceedings of the 19th International Scientific Conference, Jelgava, 20–22 May 2020. Jelgava, 2020. P. 1892–1899.

10. Kukharets S. M. Increasing the energy autonomy of agroecosystems. Mechanical and technological bases : monograph. Zhytomyr : ZhNAEU, 2016. 192 p.

11. Kukharets S. M., Golub G. A. Ensuring energy autonomy of agroecosystems based on biofuel production. *Bulletin of Zhytomyr National Agroecological University*. 2012. No. 1, Vol. 1. P. 345–352.

12. Kukharets S. M., Golub G. A. Regulation of the use of organic resources for the production of biofuels. *Agricultural machinery* : collection of scientific articles. Lutsk : Lutsk National Technical University, 2013. Iss. 24. P. 187–194.

13. Kukharets S. M., Golub G. A., Skydan O. V., Osypchuk O. Yu. Technical and technological proposals for obtaining energy from raw materials of agricultural origin. *Bulletin of Zhytomyr National Agroecological University*. 2015. No. 2 (50), Vol. 1. P. 369–385.

14. Kukharets S. M., Golub G. A., Yarosh Y. D., Zavadska O. A. Diversified production and bioenergy conversion for rural development. *Rural Development 2017: Bioeconomy Challenges* : proceedings of the 8th International Scientific Conference, Akademija, 23–24 November 2017. Akademija : Aleksandras Stulginskis University, 2017. P. 337–341.

15. Kukharets S. M., Kukharets V. V., Osadchy O. O. Production of solid biofuels in terms of agricultural production. *Modern problems of sustainable nature management* : collection of scientific works of Podolsk State Agrarian and Technical University. 2011. Special issue for the scientific-practical conference. P. 159–163.

16. Vares V., Kask Ü., Muiste P., Pihu T., Soosaar S. Manual for biofuel users. Tallinn : Tallinn University of Technology Press, 2005. 178 p.

# 10. PRODUCTION AND USE OF GENERATOR GAS

**Lecture Plan:**


**10.1. General information about generator gas and historical aspects of the development of gasification technology 232**
**10.2. Fundamentals of the chemical and thermal gasification process and types of gasification processes 238**
**10.3. Technological schemes for generator gas production 242**
**10.4. World experience and practical implementation of generator gas production 247**
**10.5. Investigation of gasifier plants parameters 253**
**10.6. Prospects for generator gas production in Ukraine 261**


## 10.1. General information about generator gas and historical aspects of the development of gasification technology

**Gasification** is the process of thermal conversion of biofuels at temperatures from 800 to 1500 °C in the presence of air or oxygen to produce syngas or generator gas with a calorific value of 10 to 16.7 MJ/m$^3$. The use of solid fuel gasification technologies as a component of biomass makes it possible to use it for the operation of all types of internal combustion engines. The source of oxygen required for the gas formation process can be air, steam, or gases containing oxygen.

**Gasifiers** are devices (fig. 10.1), designed to produce combustible generator gas from carbon fuels under the influence of high temperatures and in the presence of an oxidizer.



**Fig. 10.1. General view of a gasifier**

**Generator gas** is a gas mixture containing carbon monoxide (II) *CO*, molecular hydrogen $H_2$, and a small amount of methane $CH_4$. Generator gas is obtained in gasifiers by passing air through a layer of solid fuel under the influence of high temperatures. Carbon monoxide is mixed with water vapor, which provides the hydrogen component of the generator gas: $CO+H_2O=CO_2+H_2$.

Generator gas can be used for combustion in the furnaces of pyrolysis and steam boilers, in installations for heating or lighting buildings, for welding metals, for combustion in industrial furnaces (for example, in the metallurgical, cement, ceramic industries, in the production of glass), used as raw materials in the chemical industry and for combustion in the cylinders of internal combustion engines.

In engineering, depending on the type of blast used, there are the following generator gases: air, water, mixed and vapor-oxygen. Air gas is a gas produced by the interaction of carbon with dry air. It consists of 34.7% carbon monoxide and 65.3% nitrogen, and its calorific value under normal conditions is 4,436 kJ/m$^3$. Water gas is formed when water vapor passes through a layer of incandescent fuel. Composition of water gas is *CO*, $CO_2$ and $H_2$. The calorific value of such a gas is from 10,044 to 11,300 kJ/m$^3$ under normal conditions. When water vapor and air are simultaneously supplied to the gasifier, a mixed gas of the following composition is formed: $H_2$, *CO*, $CO_2$, $CH_4$, $N_2$.

According to the nature of the direction of gas flow, gasifiers are divided into: direct, reverse, two-zone and horizontal gasification processes (fig. 10.2). These gasification processes differ in the methods of blow gas supply, generator gas extraction, and the location of the corresponding reaction zones.

The history of stationary gasifiers begins much earlier than transport ones. Therefore, when creating a transport gasifier, the most successful stationary design was completely transferred to a new installation, determining the nature of its development for a long time. The first gasifier was built in 1900 by Taylor in France, and the first patent for an automobile gasifier, which at that time was exclusively of historical interest, provided for a special system for regulating the addition of water vapor to the air. Air and steam entered from below from under the grate into the cavity of a fire-resistant ceramic lined shaft.

Within fourteen years (from 1900 to 1914), since the appearance of the first gas-generating car, several dozen gas-generating cars were built in the world. However, the beginning of the development and widespread use of transport gasifiers can be considered 1914, when the economic prerequisites that brought this new branch of technology to life began to be particularly acute. The growth of the global automotive fleet at this time has significantly increased the consumption of liquid fuel. The extremely uneven distribution of oil on the Earth's surface soon forced a number of countries to look for substitutes for this relatively rare fossil. France, whose energy resources were worse than other European countries, found itself in particularly difficult conditions.

The first industrial production of transport gasifiers was established in France, and their industrial testing took place in Casablanca, Morocco, when the Morocco Automobile Club held a series of competitions in which the first five gas-generating tractors and trucks took part.

In the period from 1920 to 1938, the convenience and cheapness of petroleum fuels caused a decrease in demand for the use of automobile gasifiers, but by 1930, in all European countries with sufficient biomass resources, this technology was actively developing, competing with gasoline.

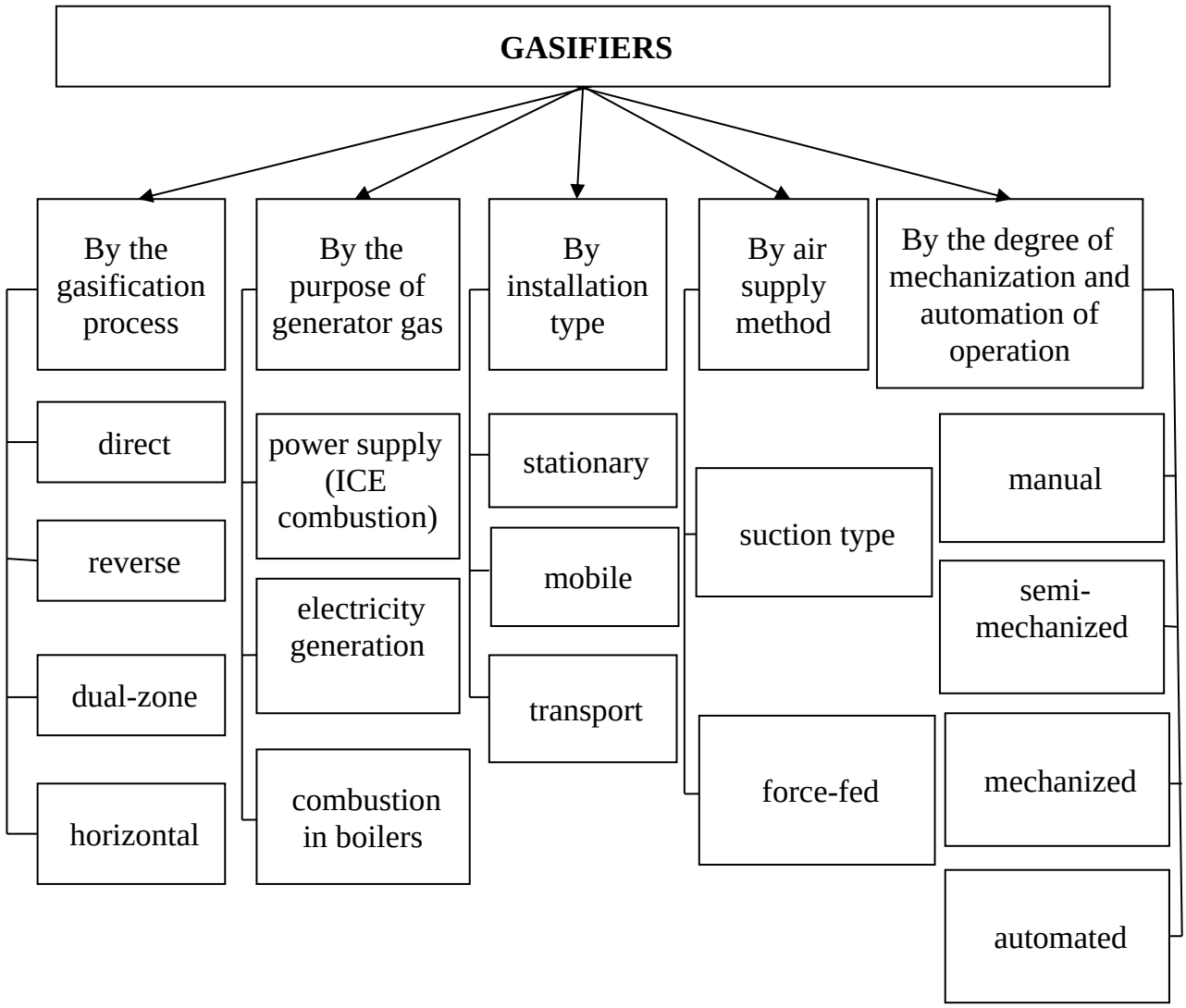


**Fig. 10.2. Classification of gasifiers**

In 1924, the famous French Inventor G. Imbert built the first gasifier plant with a gasifier of the reverse gasification process. They should be noted the works of V. Veit (1933) and T. Roser (1938) devoted to optimizing the gasification modes of various fuels in transport-type gasifiers.

A further big step in the development of the technology of horizontal process automotive gas generators was made by the French Inventor J. Goen in 1928. According to his schemes, gasifiers for trucks, agricultural machinery, etc. are still designed. The main idea taken as the principal of the operation of the J. Goen's gasifier is to create conditions under which fuel carbon could be oxidized directly to carbon monoxide, bypassing the carbon dioxide phase. It should also be noted the design of the charcoal automobile gasifier of the direct gasification process proposed by A. Gonn, since the method of adjusting the core height described in his patent was used in many later designs of automobile gasifiers. In 1932, French engineers developed the

first almost successful gasifier plant for a motorcycle. The gasifier plant operated in accordance with the horizontal principle of charcoal gasification.

The active development of automobile gasifier technology took place in 1936, when, due to political instability, the governments of most European countries, anticipating the possibility of war and trying to ensure the energy security of their states, actively subsidized the development of this technology. By 1938, France had 7,800 gas-generating trucks, which accounted for 2% of its automobile fleet, and 2 years later, in 1940, France began mass conversion of commercial and military vehicles to biomass waste and by the end of the 40th year, 50 thousand gas-generating vehicles were in operation and another 40 thousand gas-generating units were in production. This was made possible by the creation of a number of successful designs of gasifier plants in France, which significantly influenced the further development of the technology on a global scale.

In Germany, switching vehicles to gas-generating fuel has become a national policy. As early as in 1935, more than 10 thousand trucks and cars (fig. 10.3), several thousand tractors and motorcycles, and several hundred barges and trolleys were transferred to the gasifier for fuel. Gasifier plants were produced by more than 100 companies, however, the greatest importance for the further development of the technology was made by gasifiers "Visco", "Deitz", "Humbolt-Deitz" (fig. 10.4), "Voigt", "Abogen", "Hansa", "Büssing", etc. The listed designs of gasifier plants have not lost their relevance today.



**Fig. 10.3. Mass production of gas-powered vehicles, "FIAT" plant, Germany, 1940**

From 1940 to 1945, about 500 thousand transport gasifier plants were manufactured in Germany, of which more than 300 thousand were manufactured only for trucks. In the UK, in 1939, more than 1,500 cars were equipped with gasifier plants.

After the end of World War II, Denmark also increased its fleet of gas-generating vehicles up to 6 thousand units. As a result, it was possible to avoid famine among the

population, because transportation between farms and cities was restored (fig. 10.5). Denmark, not having sufficient reserves of fuel biomass, did not develop gas-generating technologies before the war. However, during the German occupation in Denmark, they were designed gasifiers ran on seaweed, sawdust briquettes and various types of peat. These solid fuels served the vehicles of Danish Agriculture and industry until 1945.

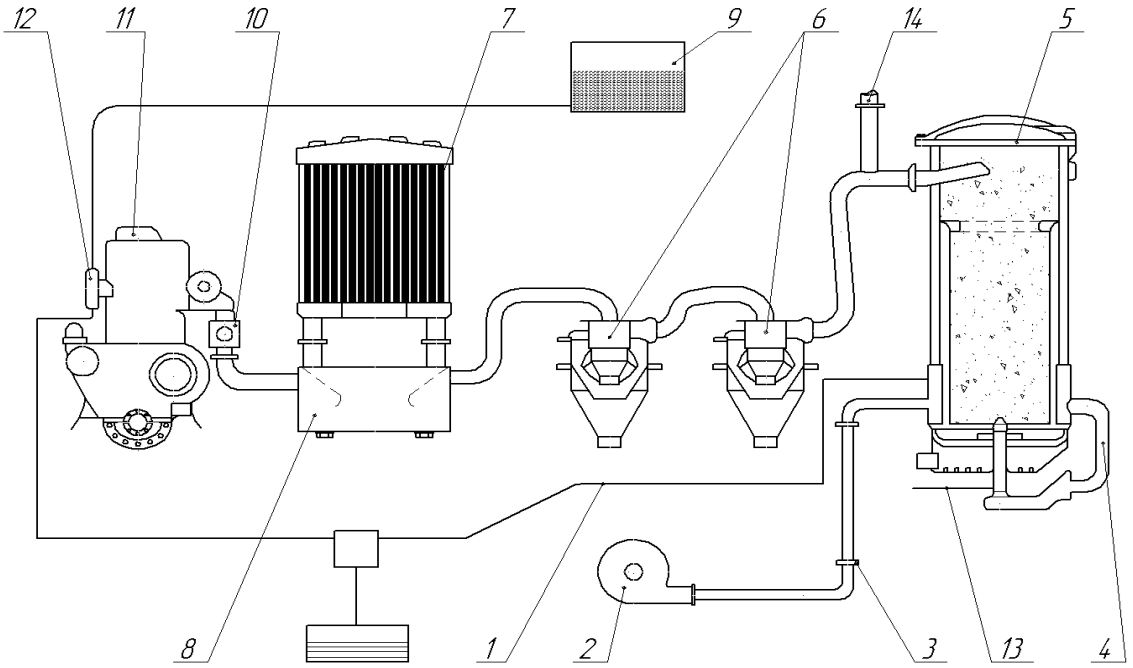


**1 – pipeline; 2 – ignition fan; 3 – air duct; 4 – central tuyere; 5 – gasifier; 6 – centrifugal cleaner; 7 – cooler; 8 – condensate tank; 9 – backup tank; 10 – mixer; 11 – internal combustion engine; 12 – starting fuel heater; 13 – ignition electrode; 14 – torch**

**Fig. 10.4. Diagram of the Humbolt-Deitz gasifier plant**



**Fig. 10.5. Delivery of products to Denmark by producer gas-powered vehicles**

In the United States, gas-generating cars were not distributed, but they were produced for export to China.

In Europe, generator gas became a "public fuel" in 1946. By March 1944, more than 80% of trucks and other vehicles and 26% of passenger cars (more than 260 thousand units) were transferred to generator gas. In addition, no major European state had fewer than 10,000 producer gas-powered vehicles.

The most efficient way is to produce generator gas using stationary installations, which can provide heat and energy to most industrial and civil facilities.

The resurgence of interest in technology peaked in 1973 and 2005, in response to a sharp increase in prices for petroleum products and the threat of further cuts in their supply. This has generated high interest from the governments of some countries, large and small companies, engineers and scientists, who have begun to re-explore the current potential for the development and application of gas-generating technologies.

It should be noted that in Sweden, South Africa, China and the Philippines, the development of gas generating technologies has not stopped and is supported at the state level. The relevant research is funded in these countries from the budget, stimulating at the state level the commercial use of technology mainly in agriculture, forestry and utilities.

The South African experience is particularly interesting because of the oil and gas embargo, when the consumption of oil-bearing fuels was reduced to a minimum, and all possible industries were switched to generator gas, which was obtained from hard and brown coal, of which South Africa has the largest reserves on its territory. At the end of the last century, more than 100 gasifier stations with a capacity of 0.5 to 1 MW were put into operation in South Africa and four types of transport-type gasifier plants with a capacity of 30 to 150 kW were mass-produced.

Thanks to the current policy of supporting technologies for generating energy from biomass waste in the European Union, India, Brazil, Ecuador and Argentina, renewable energy, including gas-generating technology, has become competitive and commercially attractive. This initiated the production by private companies of transport-type gasifier plants with a capacity of up to 100 kW, which are used in agriculture, forestry and public utilities in these countries.

The creation of modern highly efficient gasifier plants is impossible without analyzing scientific achievements in this field of knowledge. Only the development of fundamentally new ideas and approaches gives chances to gain a leading position in the global market of gas-generating technologies. Conducting further research is a necessary condition and key to the success and new prospects for the practical use of gasifiers in the military and civil industry of Ukraine, agriculture and forestry.

As a rule, various types of local fuels are used as a raw material base for the production of generator gas. Local fuels are understood as various types of fuels that, due to their low calorific value and significant content of ballast – moisture and mineral impurities – are unsuitable for transportation over long distances. It is economically feasible to use such types of fuel only in the areas of their production. Local fuels are divided into two groups: plant-based fuels and fossil fuels.

The group of local fuels of plant origin includes: firewood; cutting wood waste; woodworking and processing waste; forest substandard materials (leaves,

needles, cones, small branches, dried wood); crop residues, etc.

The use of these crops is important for agricultural enterprises, especially today, when energy prices are constantly growing and there is a problem of providing existing production facilities with their own energy carriers from local renewable energy sources.

The group of local fuels of fossil origin consists of: peat; shale; low-quality brown coal; sapropels, etc.

## 10.2. Fundamentals of the chemical and thermal gasification process and types of gasification processes

Gasification is the process of producing generator gas as a result of the interaction of fuel carbon with oxygen in a high temperature zone. In engineering, depending on the type of blast used, there are the following generator gases: air, water, mixed and vapor-oxygen.

**Air gas** is a gas produced by the interaction of carbon with dry air. It consists of 34.7% carbon monoxide and 65.3% nitrogen, and its calorific value under normal conditions is 4,436 kJ/m$^3$.

**Water gas** is formed when water vapor passes through a layer of incandescent fuel. Composition of water gas is $CO$, $CO_2$ and $H_2$. The calorific value of such a gas is from 10,044 to 11,300 kJ/m$^3$ under normal conditions.

**Mixed gas** is formed by simultaneous supply of water vapor and air to the gas generator and has the following composition: $H_2$, $CO$, $CO_2$, $CH_4$, $N_2$.

In gasifier, a mixed gasification process takes place, and the resulting gas is called **generator gas**. According to the nature of the direction of gas flow, gasifiers are divided into: **direct, reverse, two-zone and horizontal gasification processes** (fig. 10.6).

The gasification process differs in the methods of blow gas supply, generator gas extraction, and the location of the corresponding reaction zones.

Depending on the nature of the gasification process and the changes that occur with the fuel material, the following zones are distinguished in a gasifier: oxidation, reduction, dry distillation and drying.

**The oxidation zone** is quite insignificant, the blow gases are completely consumed for the oxidation process in a fairly small part of the fuel layer, gradually, depending on the consumption of blow gases, a significant part of $CO_2$ is formed in the gas. In the middle of the oxidation zone, the $CO_2$ content reaches its maximum value, and begins to gradually fall at the end of this zone. The process of carbon combustion proceeds with the release of a significant amount of heat, and the temperature in the reaction zone reaches from 1,200 to 1,500$^0$C.

**The recovery zone** is characterized by a drop to the minimum values of the $CO_2$ content with a simultaneous increase in the $CO$ content. When a gas stream passes through a layer of incandescent material, $CO_2$ reacts with the fuel's carbon to form co $CO$. The amount of blast gases (oxygen) in this zone is minimal. Carbon monoxide is created in the oxidation zone simultaneously with its dioxide, but due to the presence of a significant amount of oxygen, it burns to $CO_2$. Decomposition in the recovery zone

of water vapor contributes to the appearance of $H_2$ and $CO$ in the gas. Since the reactions occur with heat absorption, the temperature in the reduction zone is between 900 and 1,100 $^0$C.

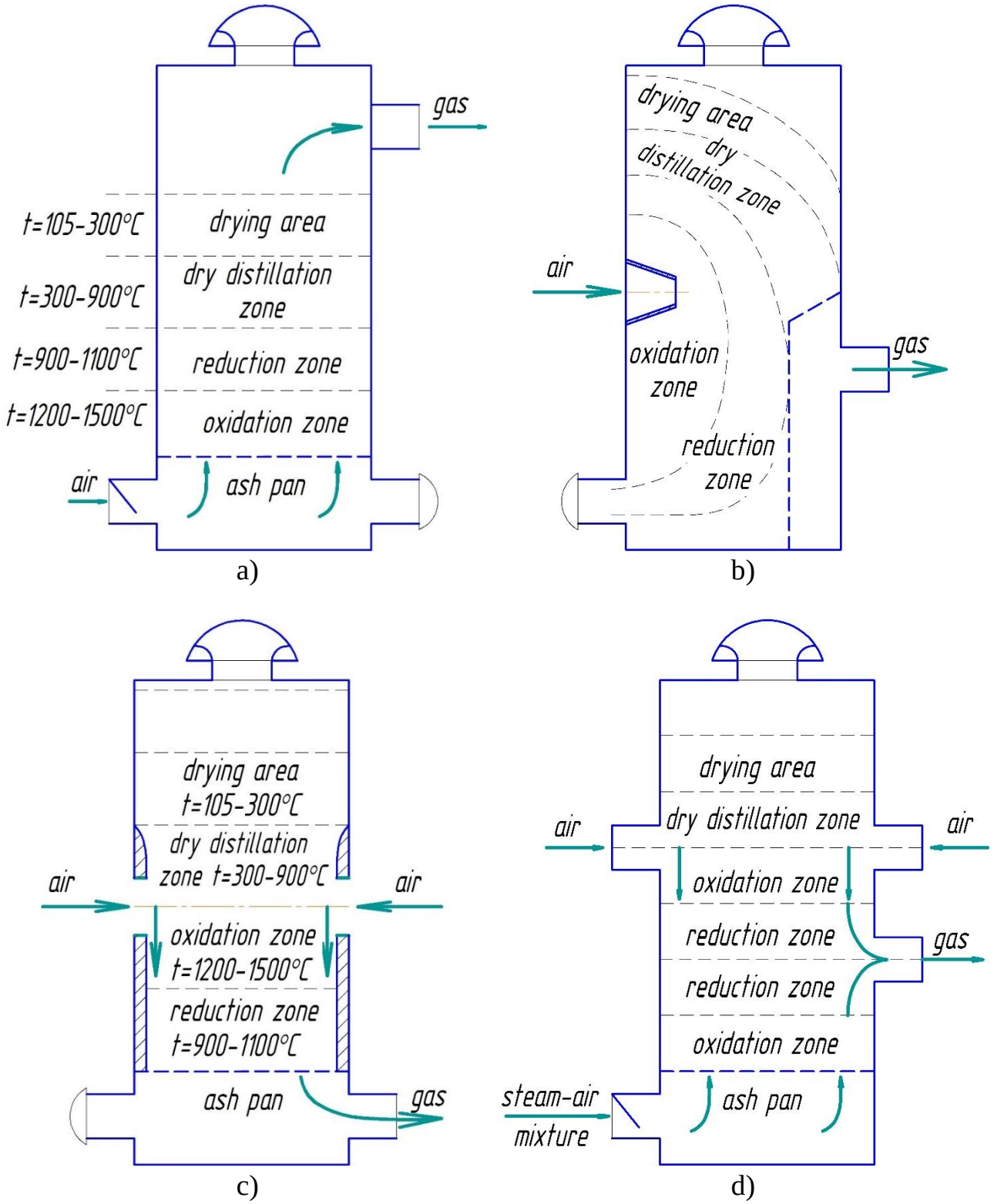


**a) direct gasification process (anti-flow gasifier); b) horizontal gasification process (cross-flow gasifier); c) reverse gasification process (direct flow gasifier); d) two-zone gasification process (combined gasifier)**

**Fig. 10.6. Types of gasifiers by the nature of the gasification process**

**The active zone** consists of an oxidation zone and a reduction zone, the latter occupies a significant part of the active zone.

**A dry distillation zone** is an area where fuel is heated to a certain temperature without air access. When the fuel is heated to $100^0$C, it dries out until the moisture evaporates, and then its temperature increases sharply. When heated above 280°C, its accelerated decomposition begins. The dry distillation zone is located above the oxidation zone, but the temperature conditions of the layers of fuel material that are located in this zone (300-900°C) do not provide conditions for the chemical reactions of $CO_2$ reduction to $CO$ and the formation of $H_2$ due to water decomposition, but are sufficient for the processes of dry distillation of fuel material.

In the process of fuel decomposition, the following gases are formed during gas formation: $CO$, $CO_2$, $H_2$, $CH_4$, $C_nH_m$, as well as water, resin, and alcohols. In the drying zone, the top layer of fuel located in the hopper of the gasifier is dried with gas selected by the source of consumption. The temperature of the drying zone is from 105 to 300°C.

**The main chemical reactions of the generator process are as follows:**

1) $C+O_2=CO_2+407$ kJ/mol and $2C+O_2=2CO+244.5$ kJ/mol.

These reactions occur simultaneously. When $O_2$ blow gases act on the reaction surface of the fuel, a carbon-oxygen complex is formed, followed by decomposition into $CO$ and $CO_2$. The $CO/CO_2$ ratio depends on the temperature in the oxidation zone. The $CO$ concentration increases with increasing temperature. The heat that is released during these reactions increases the temperature in the oxidation zone and leads to melting of the ash. The addition of water vapor to blow gases reduces the temperature and evens the flow of the process.

2) $CO_2+C=2CO-164.9$ kJ/mol.

The reaction is endothermic, occurs with an increase in volume, and is characteristic of the recovery zone. Reducing pressure and increasing temperature contributes to the intensification of $CO_2$ reduction to $CO$.

3) $C+(H_2O)_{steam}=CO+H_2-122.6$ kJ/mol;

$C+(2H_2O)_{steam}=CO_2+2H_2-75$ kJ/mol.

These reactions occur with the participation of hygroscopic and chemical moisture of the fuel material. Reactions are endothermic and the rate of their course depends on the temperature in the recovery zone. At temperatures above $900^0$C, the rate of reactions increases.

4) $C+2H_2=CH_4+85.2$ kJ/mol.

The reaction takes place in the dry distillation zone with the release of a large amount of heat and a decrease in volume. A decrease in the process temperature and a decrease in the grate strength and an increase in the hopper height, fuel humidity, and the distance of the dry distillation zone from the combustion zone affect the increase in the $CH_4$ content in the upper fuel layers.

5) $CO+3H_2=CH_4+H_2O+204$ kJ/mol;

$2CO+2H_2=CH_4+CO_2+258$ kJ/mol;

$CO_2+4H_2=CH_4+2H_2O+166$ kJ/mol.

$CH_4$ formation reactions are characteristic of the reverse gasification process. The content of $CO$ and $H_2$ in the gas increases as it approaches the grate in the presence

of a certain amount of $CO_2$. When these gas components interact, $CH_4$ can be formed due to a decrease in the content of $CO$, $CO_2$ and $H_2$.

6) $CO+H_2$= resin+118.6 kJ/mol.

In the dry distillation zone, resin formation reactions occur when $CO$ interacts with $H_2$ and are accompanied by significant heat release.

7) $CO+0.5O_2=CO_2+284$ kJ/mol.

In the presence of excess oxygen $O_2$, the flow and reverse reaction of $CO \rightarrow CO_2$ is observed with significant heat release.

8) $H_2+0.5O_2 \leftrightarrow H_2O_{steam}+241$ kJ/mol.

Oxygen supplied to the combustion zone forms water vapor with hydrogen. The reaction of water vapor formation is exothermic, occurring with the release of heat.

**Direct gasification process** means that a dry distillation zone and a drying zone are located above the active zone. Gas extraction is carried out in the upper part of the gas generator. The disadvantage of the direct process is that the gasification products are mechanically mixed with the products obtained in the upper layers of the fuel. The ingress of resinous substances and hydrocarbons into the resulting gas is unacceptable, even if their content is low.

**Reverse gasification process** means that air is fed through the tuyere belt to the gasification chamber located in the middle part of the gasifier, and the products of the gasification process are removed in its lower part. The combustion zone is located above the fuel recovery layer, and the drying and dry distillation zones are located as in a direct process gasifier. In the oxidation zone, air oxygen reacts with fuel carbon to form carbon dioxide. From the oxidation zone, gases descend into the reduction zone, heating the fuel to 900-1,100$^0$C, and the process of reducing part of the carbon dioxide to carbon monoxide proceeds. The products obtained at the top of the gasifier do not mix mechanically with the generator gas, but pass through a high temperature zone before leaving the gasifier. When passing through the active zone, dry distillation products burn and steam decomposes.

**The two-zone gasification process** is presented in a combined gasifier, where the direct and reverse gasification processes are combined into a single scheme. In the fuel of the lower part of the gasifier, gasification proceeds according to the direct process, and in the upper part – according to the reverse process. The gasifier has two oxidation zones and two reduction zones. Air is supplied to the oxidation zone of the upper part of the gasifier by peripheral tuyeres, and to the oxidation zone of the lower part – under the grate. The initial generator gas is taken between the recovery zones, which causes its high temperature of 700$^0$C (compared to 400-500$^0$C in the gasifier of the direct gasification process). The advantage is the high degree of decomposition of resins in fuels of plant origin. The disadvantage is the high temperature of the outgoing gas, which requires the use of additional cooling systems.

**Horizontal gasification process** mean that drying and dry distillation zones are located above the active zone. This arrangement of zones in the gasifier significantly reduces its dimensions and weight (high-speed type of gasifier). It is characterized by high flexibility and fast ignition. The advantage is that the volume of the core does not exceed several cubic meters, has a pear-shaped shape, and the result of the gasification process is $CO$, which eliminates the need for further chemical reactions. The

disadvantage is the inability to use fuel with a resin content and ash content above 5%.

Gasifiers of direct and reverse gasification processes are widely used. For their intended purpose, they are used: direct – to produce gas for combustion in boiler furnaces, or in energy-technological processes for the release of chemically active components; reverse – to obtain pure gaseous fuel for ICE driving, burning in the furnaces of drying machines and process furnaces.

### 10.3. Technological schemes for generator gas production

Variants of technological schemes for the production of generator gas for power needs and for electricity production are presented in fig. 10.7. Generator gas production technologies depend on the selected raw materials and the final purpose of the gas for use. However, all of them, as a rule, include the following stages: preparation of raw materials; loading of raw materials into the hopper of the gasifier; providing a gas-air regime to maintain the gasification process; gasification of raw materials; gas purification and cooling of gas.

First, the raw material is evenly crushed and dried, which increases its bulk density. As fuel they are used: fuel briquettes, wood chips, waste from the woodworking industry with a fraction of 60×60 mm and humidity from 12 to 19%. If the humidity of raw materials is higher than the specified limits, additional drying equipment is used in the technological scheme. Next, the prepared raw materials are fed, using a screw conveyor, to the hopper of the gasifier 1. The loading is upper one. Instead of a screw conveyor, the following options can be used for loading raw materials: operational warehouse, semi-automatic, bypass valves.

To ensure the flow of the gasification process, the necessary gas-air mode should be set. Air supply to the gasifier is carried out through a tuyere hole in the gasification chamber – the main unit of the gasifier. Air injection is carried out forcibly by means of a fan. The resulting generator gas enters cyclone 2, where the first stage of gas purification from particles less than 5 mm in size is carried out. The scheme also uses a cyclone expander (not marked in the diagram) with a volume of 3 to 5 $m^3$, which is designed for cooling and basic purification of water and large carbon particles by instantly changing the volume.

Partially purified generator gas enters the disintegrator 3 for further purification from fine mechanical particles. The next stage of gas purification from residual fine particles and dissolution of chemical impurities in water with simultaneous cooling of the gas is carried out in scrubbers 4, after which it is fed to an electrofilter for final purification from impurities in the form of complex chemical compounds, resins, etc., as well as to remove residual moisture from the gas.

The principle of the scrubber operation is as follows: water circulating between the water treatment unit and the scrubber using a circulation pump, inside the sealed chamber, is sprayed towards the selected gases, removing heavy metal oxides, soot and other harmful impurities from them. The waste water enters the water treatment unit again for cleaning and then feeding back to the scrubber.

The electrofilter is designed for cleaning generator gas from chemical and mechanical impurities, as well as for removing moisture. The system also provides a

moisture separator for extracting water vapor from the gas. A receiver is used to equalize the composition of generator gas that is supplied to the consumer.

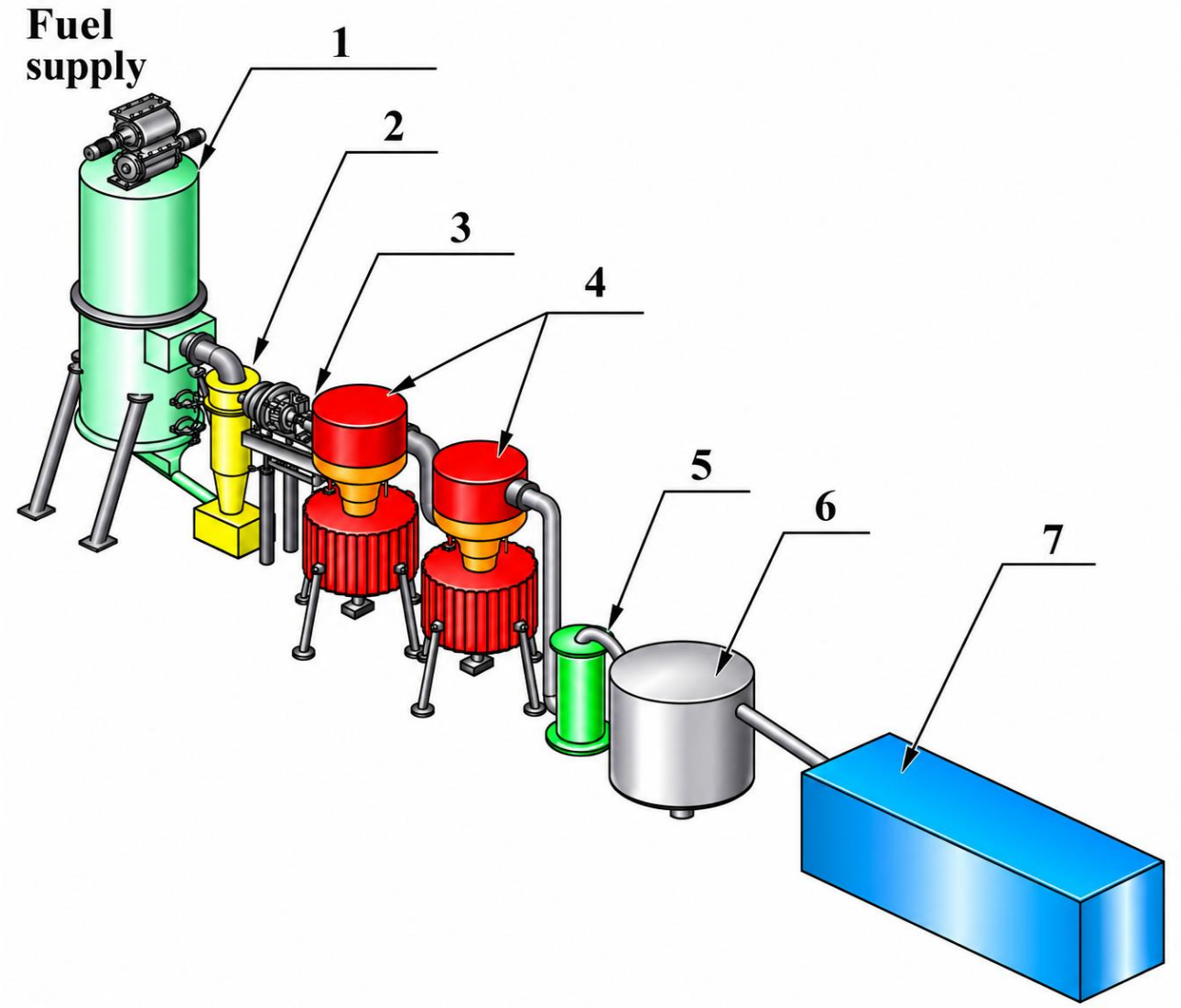


**1 – gasifier; 2 – cyclone; 3 - disintegrator; 4 – scrubber; 5 – electric filter; 6 – receiver; 7 – generator gas consumer**

**Fig. 10.7. Technological scheme for the production of generator gas from biomass**

The system can operate in two modes – gas and gas-diesel. In systems operating in gas-diesel mode, they are used two control schemes that work in parallel – for gas and for diesel fuel.

The technological processes of generator gas production based on powerful gasifier plants for industrial and large agricultural enterprises and forestry are interesting.

Industrial gasifier plants (power units) with an electric capacity from 200 to 1,000 kW for grain processing, agricultural, forest and wood processing farms are produced by many European and Chinese leading enterprises in the field of gasification.

Scheme of generator gas production using a mobile gasifier plant (fig. 10.8)

compiled on the basis of a standard scheme for the production of generator gas for internal combustion engines of motor vehicles in gasifier plants of the *Imbert* type. This scheme additionally provides a gas cooler installed in front of the fine filter to ensure the greatest condensation on the cleaning rings. To start the internal combustion engine on gas, you need to open the throttle valve of the mixer, turn on the ignition, setting a late advance, and turn on the engine, selecting such a position of the air flap of the mixer that a combustible mixture of the required quality is formed. When the engine starts working, you should increase the ignition advance angle, choose the best position of the air flap, warm up the engine and start working.

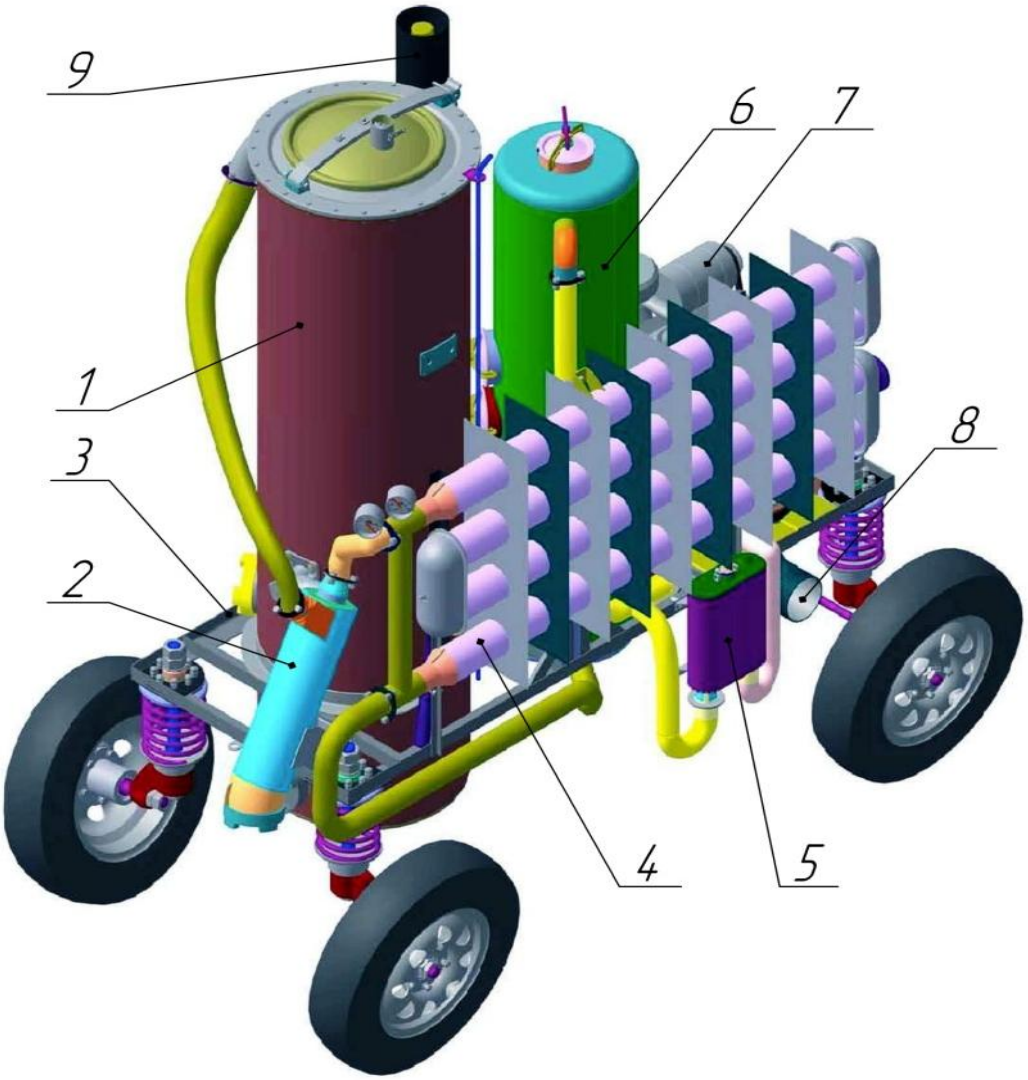


**1 – direct-flow gasifier, 2 – inertial gas purifier (cyclone); 3 – trolley; 4 – gas cooler; 5 – engine heater; 6 – vertical gas purifier (scrubber); 7 – internal combustion engine; 8 – pump; 9 – device for igniting the gasifier**
**Fig. 10.8. Diagram of the NATA-3 mobile gasifier plant**

The main unit of a gasifier plant is a direct-flow gasifier (fig. 10.9). The design of the gasifier is all-metal welded. The body 2 of the gasifier is made in the form of a cylinder of 554 mm. The bottom 1 is welded to the lower part of the housing 2, above which grate grilles are installed.

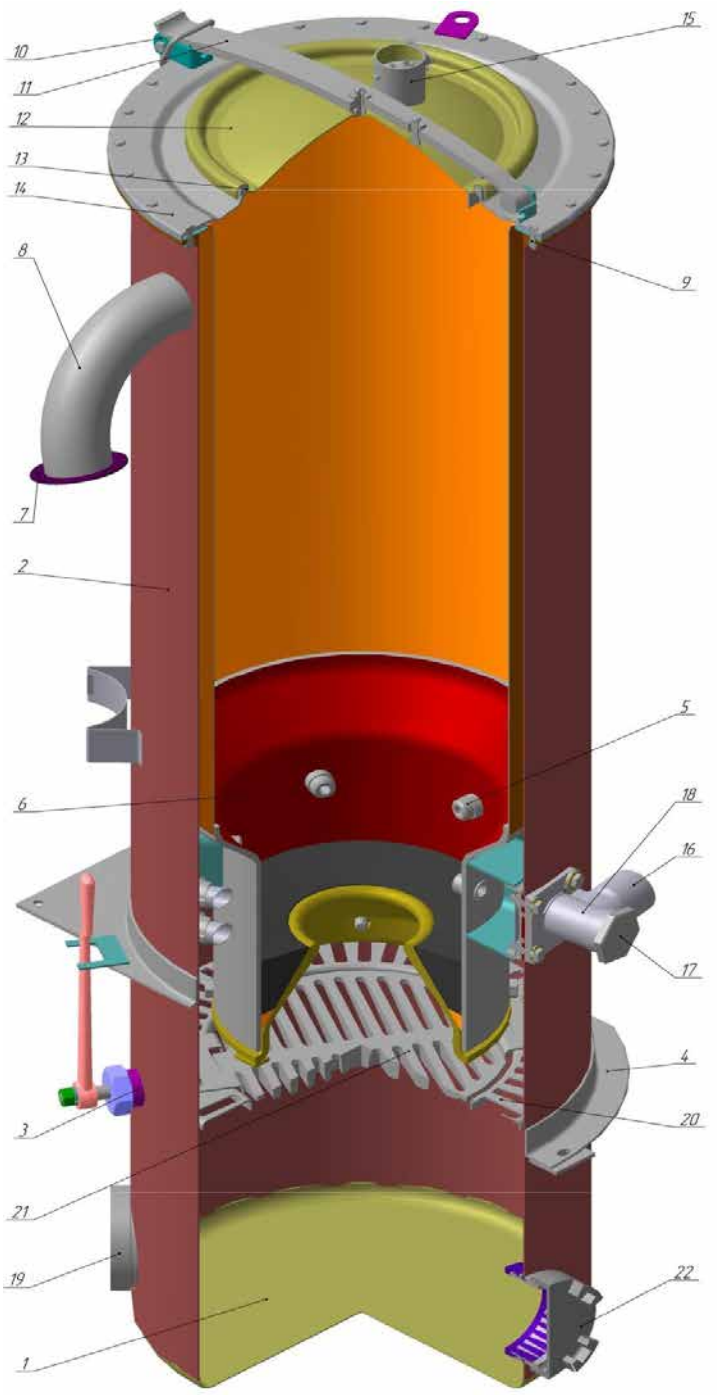


**1 – bottom, 2 – housing, 3 – stopple, 4 – rear gasifier support belt, 5 – tuyere, 6 – gasification chamber, 7 – flange, 8 – gas outlet pipe, 9 - connecting flange, 10 – lock handle bracket, 11 – spring, 12 – loading hatch cover, 13 – asbestos cord, 14 – loading hatch flange, 15 – steam outlet pipe, 16 – non-return valve, 17 – plug, 18 – air duct pipe, 19 – recovery zone hatch, 20 – fixed grate, 21 – fire-grate, 22 – ash pan hatch**

**Fig. 10.9. Direct flow gasifier**

A connecting flange 9 is attached to the upper part of the gasifier housing. the grate consists of two parts: fixed 20 and movable 21. The fixed part of the grate is made of sheet steel stamping and attached to the gasifier body by two support corners and two brackets. The movable part of the grate is cast from ductile iron and lies freely on

the support brackets of the inner part of the fixed grate. To rotate the movable part of the grid, a hole with a stopple 3 is made in the wall of the gasifier housing, through which the shaft passes. The outer end of the shaft is made in the form of a turnkey square of 14 mm, and the inner end has a protrusion that enters the groove of the axis of the movable grilles. The plug simultaneously limits the angle of rotation of the moving part of the grate.

The gas extraction pipe 8 is welded to the gasifier body in its upper part. For the purpose of uniform gas extraction, a reflective visor 7 is installed.

The design provides two threaded hatches: an ash pan hatch 22 installed above the bottom to eliminate ash and a recovery zone hatch 19. To ensure tightness of the connections, gaskets made of asbestos cloth are installed under the hatch covers.

In order to connect the air duct pipe 18 with the gasification chamber 6, a shaped hole is provided in the gasifier housing. The pipe 18 is cast from grey cast iron, on the outlet part of which a non-return valve 16 is installed to prevent gas from escaping from the gasifier when the engine stops. The opening for igniting the gasifier is closed with a threaded plug 17 of the branch pipe 18. Tightness of the connections is ensured by asbestos-steel gaskets.

In the upper part of the gasifier, a loading hatch flange 14 is provided. along the circumference of the loading hatch cover 12, a groove is made in which an asbestos cord 13 is laid. Pressing the cover against the loading hatch flange is provided by a flat spring 11 made of two sheets of spring steel. The spring is tightened by the handle 10.

A hopper with a gasification chamber is installed in the gasifier housing. The hopper body 6 ∅ 498 mm is made of low-carbon steel sheet with a thickness of 3 mm. The flange of the upper part of the hopper body is connected to the flange of the gasifier body 2 by bolts 15. In order to ensure tightness of the connections of the hopper flange to the gasifier flange and the hopper flange to the loading hatch flange, asbestos gaskets are installed.

The sealing gaskets of the gasifier are lubricated with graphite grease, which improves the tightness of the connections and preserves them during disassembly and assembly of the gasifier components.

Gasification chamber (fig. 10.10) is made in the form of a welded structure with a cast insert made of chromium-silicon alloy. The material of the camera body is 35 carbon steel sheet, 8 mm thick, and has the shape of a cylinder with an internal diameter of 340 mm. The upper part of the cylinder is flanged to the diameter of the hopper body. In the lower part of the camera body, a cut-off cone-shaped insert with a neck diameter of 140 mm is installed on four pins. An asbestos sealing cord is installed between the camera body and the insert.

On the camera body, five tuyeres evenly spaced in a circle with a total flow section of 6.5 $cm^2$ are installed. Up to four tuyeres through pipes 7, air is supplied from the air distribution box 4, in which the fifth tuyere is installed. The air junction box is made of 4 mm thick steel and welded to the chamber body. On the inside of the box flange, four bosses with threads are welded for the bolts connecting the chamber to the air pipe and the gasifier body. Air is supplied through pipes to each tuyere separately.

When designing a gasifier, the question arises of ensuring minimal pressure losses in the system that are associated with the operation of: a gasifier, an inertial gas

purifier, a vertical purifier, a gas cooler and a pipeline system. Minimization of pressure losses in the pipeline system of gasifier is achieved by using pipes of variable diameter and careful selection and installation of all elements of the pipeline system.

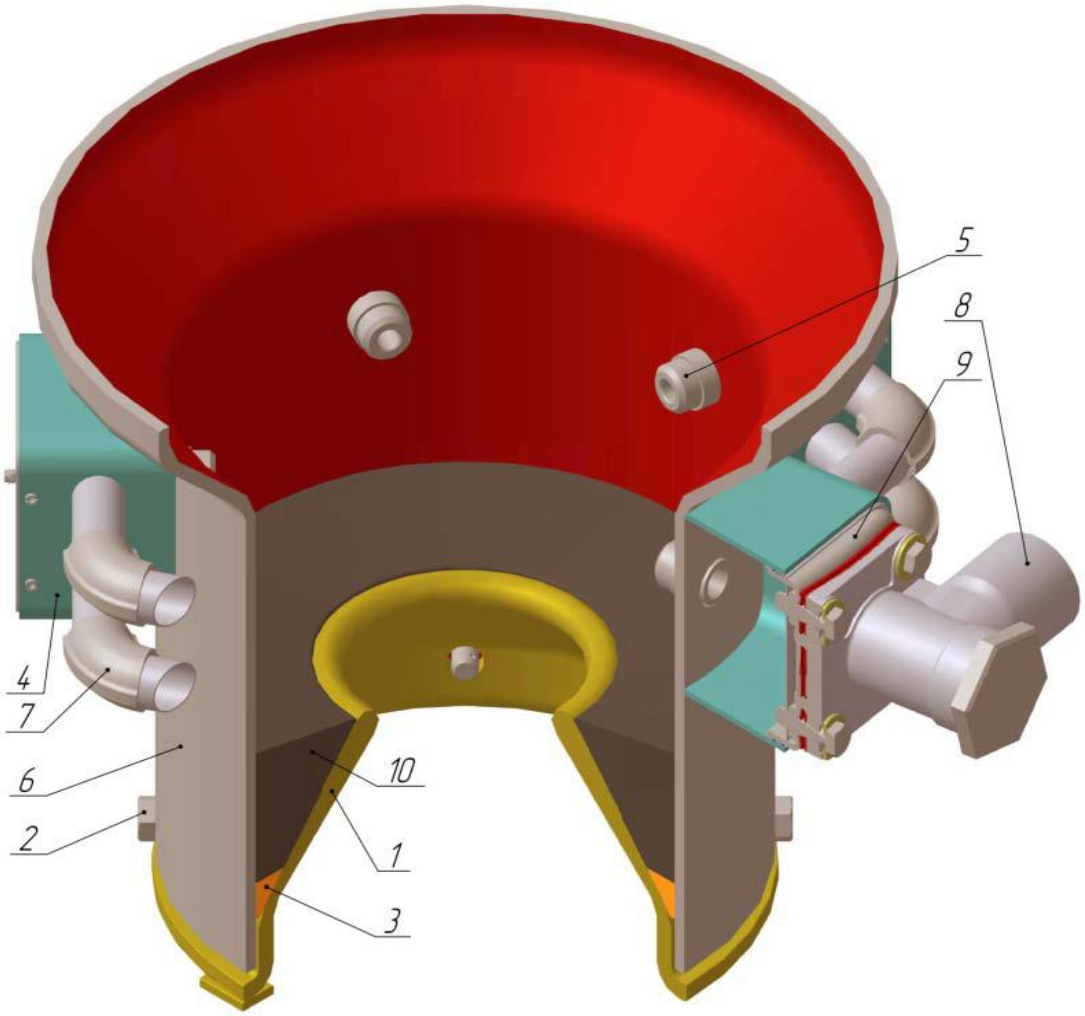


**1 – insert of the gasification chamber; 2 – support bolt; 3 – asbestos cord; 4 – air supply box, 5 – tuyere; 6 – gasification chamber body; 7 – air supply pipes; 8 – air duct pipe; 9 – air supply box cover; 10 – gasification chamber insert**
**Fig. 10.10. Housing of the gasifier gasification chamber**

## 10.4. World experience and practical implementation of generator gas production

A vivid example of the implementation in practice of the technological scheme for the production of generator gas is the gasifier plants of the company "Nasha Energia" (produced in Ukraine). This company manufactures autonomous power complexes – electric gasifiers.

In order to control production processes, automation manufactured by Heizmann (Germany) or Woodward (England) is used.

The system uses high-power industrial engines with four-stroke compression ignition. The engines are equipped with everything needed for reliable power supply. The following engine models are used: Pervomaisk Dieselmash (Ukraine); GenPower

(Turkey), AKSA (Turkey); Janbacher (Germany).

Gas and gas-diesel operating modes of installations have their drawbacks and advantages. The advantages of the gas regime are: low cost of electricity generated; complete waste disposal; payback period of 1-1.5 years. The disadvantages are: inertia of the gas system; it is difficult to start the gas generator at a temperature of minus 40 $^0$C and below; stable performance of the installation is observed in the range from 50 to 100% of power.

The advantages of the gas-diesel mode are: ease of operation in switching and connecting capacities in the range of 30-50% of power; easy start-up of the gasifier at low temperatures; the ability to work on diesel in the absence of the main fuel. The disadvantage is the high cost of electricity received – about 3 UAH/kW.

These units operate, as already noted, in two modes – gas and diesel. Technical parameters of electric gasifiers are given in table 10.1.

**Table 10.1. Technical parameters of electric gasifiers**

| Type | Electric power, kW | Gas productivity, m$^3$/h | Fuel type | Fuel consumption, kg/h | Overall dimensions, mm |
|---|---|---|---|---|---|
| **UGK-60** | 60 (YAMZ generator engine*) | 180 | Fuel briquettes, wood chips, wood waste 60×60 mm with wet of $W^p$=12–20% | 50–65 | 2,300×1,600×3,800 |
| **UGK - 100** | 100 (AKSA generator engine, AD-700DD*) | 400 | | 120–140 | |
| **UGK - 200** | 200 (AKSA generator engine, AD-700DD*) | 750 | | 200–220 | |

*– type of diesel engine in gas diesel mode.

For the production of pyrolysis, generator and synthesis gas, a gasifier with technically implemented layer-by-layer gasification on the principle of the reverse process is used. Using this method of gasification, it is possible to reduce the tar content in generator gas to a minimum value of 0.1 g/m$^3$, but even this indicator is high when using gas to power piston machines. Consequently, the resulting gas is further purified and cooled.

As shown in fig. 10.11 in the version of the gasifier plant, loading is carried out by a belt conveyor with a feed from a hopper with a volume of V=6 m$^3$ by a 10 m conveyor belt with a sluice feeder. Fuel consumption per 1 kW of electricity is approximately from 0.7 to 1.2 kg/h. For the filtration system, filters from industrial waste are used with replacement every two to three weeks.

The gasifier plant has high environmental performance – the engine exhaust contains 2.5 times less harmful impurities than on diesel fuel.

The energy sector of most developing countries is characterized by the widespread use of ICE as generators to meet electricity needs, especially in rural areas. This is due to the lack of an extensive energy system. Among the developing countries, the undisputed leaders in the development of biomass gasification technology are: Brazil, the Philippines, China, India, South Africa, Cuba, Mali, Kenya, Burundi and Madagascar, where it is enshrined in state programs aimed at eliminating the dependence of the domestic economy on fuel imports. Gasification technology is most actively developing in the Philippines, India, Brazil, Cuba and South Africa.



**Fig. 10.11. Electric gasifier plant of the company "Nasha Energia" (Ukraine), brand UGK-100**

The experience of South Africa is particularly interesting, since the embargo imposed on South Africa in 1975, along with the lack of its own gas and oil reserves, led to a serious restriction on the consumption of fuels of petroleum origin, and all

industries, if possible, were switched to generator gas obtained from hard and brown coal.

In order to effectively use the potential of biofuels, a new generation of gasifier plants with an efficiency of 85 to 92% has been created. Modern models of gasifier equipment are highly efficient and are distinguished by their versatility (multi-fuel efficiency), the presence of automatic control systems for loading and burning raw materials, improved designs of the gasification chamber and gas filtration system.

Interesting are the designs of gasifier plants to meet the power and heat needs of small farms, agricultural enterprises and households. An example of such an installation is shown in fig. 10.12.

The presented unit operates on plant residues of agricultural production with a humidity of up to 30%, which are fed from the storage warehouse of vegetable raw materials by a screw conveyor to the gasifier. Fuel consumption ranges from 80 to 120 kg/h. The gas produced by the gasifier is cleaned of mechanical impurities in an inertial gas purifier, a vertical purifier, then cooled and finally cleaned in a fine filter.



**Fig. 10.12. Gas generator set with a capacity of 200 kW, operating on plant residues of agricultural production with a humidity of up to 30% (developed by the Liaoning Institute of energy resources (China))**

The installation shown in fig. 10.13 works in the same way. This unit is characterized by high efficiency due to the automation of technological processes of

gasification of plant waste and working processes of fuel supply and ash removal. Biofuels are fuel pellets or briquettes made from plant-based biomass. Specific fuel consumption at 30% humidity ranges from 130 to 160 kg/h.



**Fig. 10.13. Gasifier plant with a thermal capacity of 300 kW, operating on plant residues of agricultural production with a humidity of up to 40% (developed by the Liaoning Institute of energy resources (China))**

An electrofilter is used to remove complex chemical compounds from the gas. Purified and cooled generator gas is pumped into a gas tank, from which, if necessary, it is fed to the consumer to meet thermal needs.

The use of fuel pellets is most suitable for automation. Fuel pellets are stored in appropriate bins, from which they are transported directly to the power plant. High efficiency during the heating period can be achieved additionally if gas tanks (battery tanks) are installed during the gasifier installation, which can continue the heating system for 1-3 days after the last load of biofuels, depending on the volume of the gas tank. Installing a gasifier with a gas tank reduces biofuel consumption by 25% due to the uninterrupted operation of the gasifier at steady-state modes. The service life of the gasification chamber and filtration systems of the gasifier plant increases while minimizing its operation in transient modes by reducing the formation of resins, volatile substances, etc.

If it is necessary to provide any type of work on the farm (for example, powering irrigation units), during seasonal work, the plant can be mounted directly on a field or on a trailer. The plant is not equipped with process control systems and requires operator supervision during operation, since due to the small size of the loading hopper, the gasifier must be filled with fuel raw materials every 4-5 hours.

The plant is characterized by a relatively high cost, average efficiency (from 65 to 70%) and a small specific weight of the installation in the range from 45 to 50 kg/kW.

From the point of view of electricity production, the ENEA gasifier plant manufactured in Italy (fig. 10.14) with a power capacity of 80 kW/h, a gas capacity of 120 $Nm^3$/h, and operating on wood waste with a humidity of 25 to 30%, is of the greatest interest.




**Fig. 10.14. ENEA gasifier plant (made in Italy) with a power capacity of 80 kW, operating on wood waste with humidity from 25 to 30 %**

This plant is characterized by high reliability of operation, operates on wood chips mainly of deciduous trees and during operation at rated power consumes from 50 to 55 kg/h of wood waste in the form of chocks measuring 200×80×80 mm. The resulting generator gas is supplied from the unit to the gas engine-generator.

This model is characterized by slightly reduced efficiency, low cost, since it is not equipped with an electronic system for monitoring technological parameters of operation, and there are no systems for automatic loading of raw materials and ash removal.

It is intended for providing electric energy to technological processes of agricultural production. Maintenance consists of periodic monitoring of the devices and fuel supply. Proper operation of the unit eliminates the possibility of generator gas leakage or fire. Installation of the plant is carried out both outdoors (under cover) and indoors.

Installation (fig. 10.15) manufactured by Spanner RE GmbH has increased reliability due to automation of work processes and a fairly high efficiency (from 89 to 92%).



**Fig. 10.15. Spanner RE GmbH gasifier plant with a power capacity of 100 kW, operating on wood waste with humidity up to 30%**

The resulting generator gas can be used for both power and thermal applications. The gasifier plant runs on wood pellets manufactured in accordance with European quality standards, the consumption of which is 35 kg/h by the installation. The operation of the plant is controlled by modern electronic systems. The design of the plant is characterized by high fire safety.

The disadvantages are the high cost and specific installation requirements, which are due to the operating requirements and additional safety requirements of this type of equipment in the EU countries.

### 10.5. Investigation of gasifier plants parameters

The research of the influence of design and technological parameters of downdraft gasifier on the concentration of carbon monoxide *(CO)* in wood gas was conducted in the laboratory conditions using the installation given in fig. 10.16.

The plant consisted of a gasifier (item 5) with adjustable recovery zone height, air blower (item 2) with adjustable rate of air introduction into the gasifier, mixer (item 10) equipped with a centrifugal air intake fan and other components.

The air introduction into the gasifier was provided with an air blower (item 2), and changed by changing its speed by changing the current frequency, which was provided by the frequency converter Hitachi-3G3JX-A4075-EF in the range from 0 to

50 Hz. The air speed at the inlet pipe of the gasifier was measured by the anemometer Tenmars TM-402. General view of the experimental plant is shown in fig. 10.17

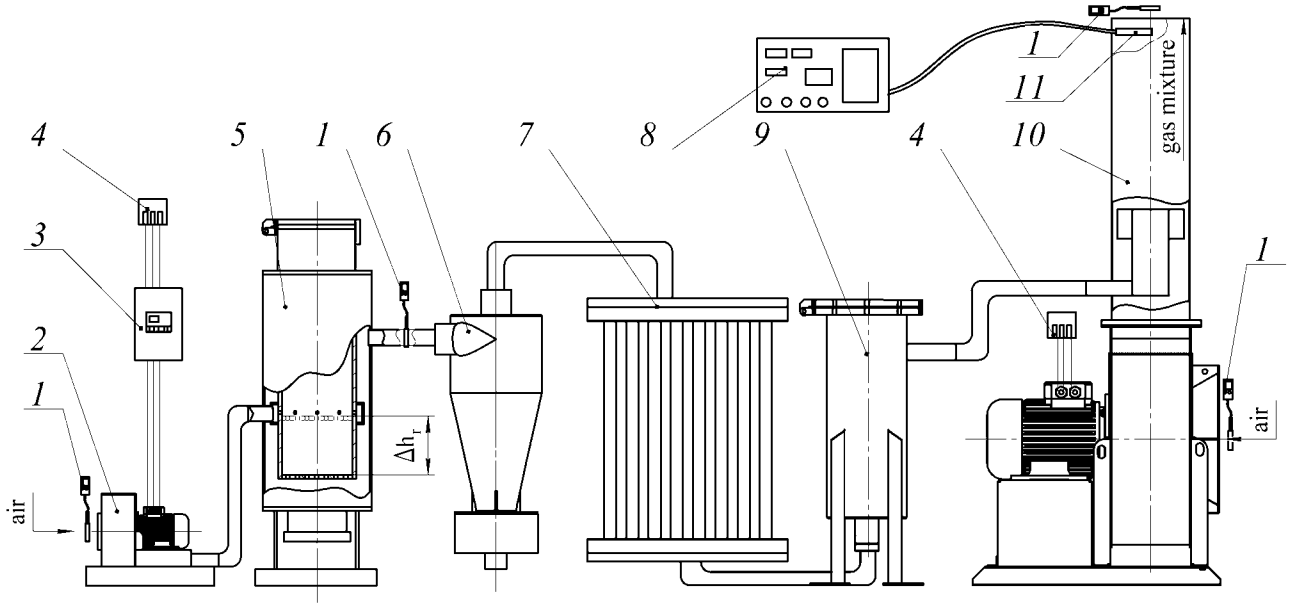


**1 – anemometer; 2 – air blower; 3 – frequency drive; 4 – socket 0.4 kV; 5 – gasifier; 6 – coarse mesh filter; 7 – cooler; 8 – gas analyzer; 9 – fine mesh filter; 10 – mixer; 11 – carbon monoxide sensor**

**Fig. 10.16. The scheme of the experimental plant**

The raw material used was hardwood, which had a fractional composition in the form of cubic elements with a side of 10 mm, 40 mm and 70 mm.




**Fig. 10.17. General view of the experimental plant**

Graphical experimental dependence of the change of *CO* concentration on the particle size as a function of the air introduction into the gasifier is shown in fig. 10.18.

In terms of reduction of the linear particle size, the carbon monoxide concentration in producer gas increases and reaches its maximum value at the size of 10 mm. The further reduction in the linear particle size is undesirable due to the design features of the operation of producer gasifier as the fuel with the smaller particle composition will spill through the holes of the grate, while reducing the size of the grate holes causing clogging and a sharp decrease in capacity relative to the air introduction into the gasifier recovery zone.

With increasing air supply, the *CO* concentration in producer gas increases (fig. 10.19) and with decreasing raw material particle size, the increase in concentration is more intense. The increase in air introduction above maximum values of the experiment is difficult due to the gasifier design features, namely the danger of reaching a temperature of thermal destruction of the gasifier housing.

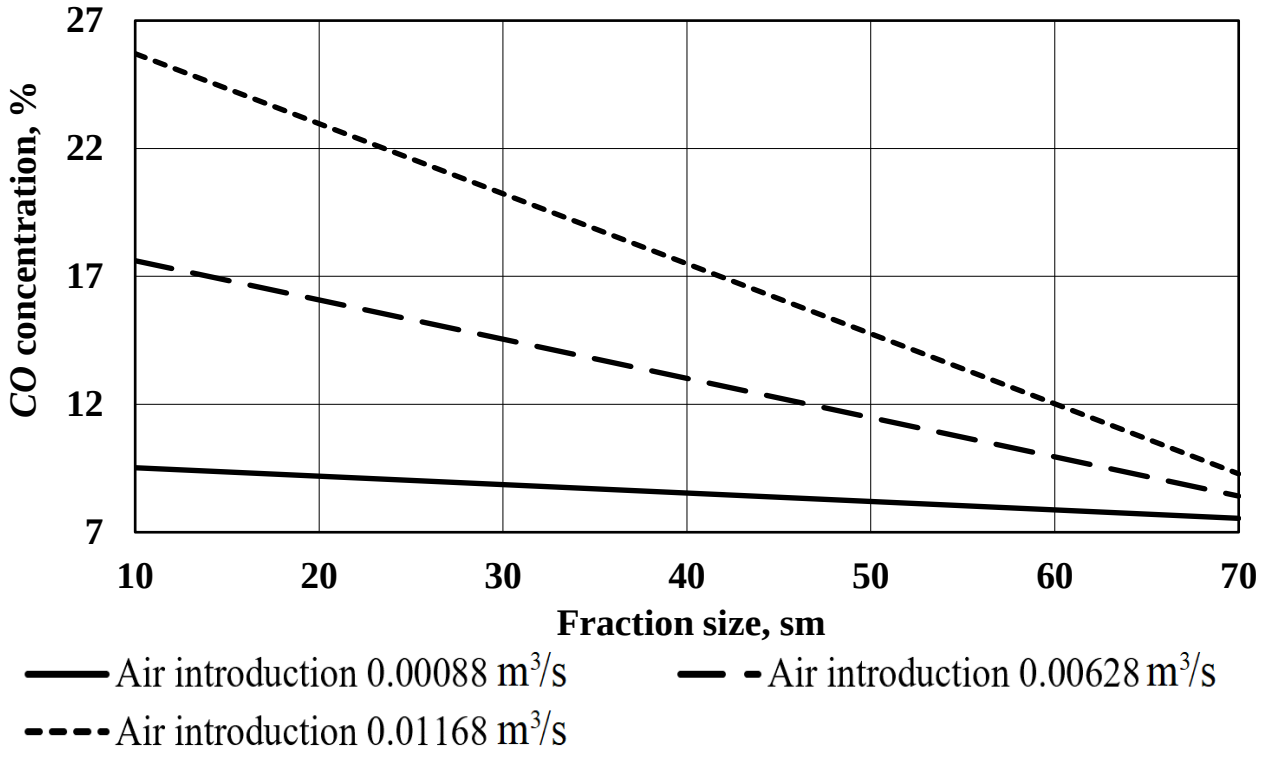


**Fig. 10.18. The dependence of the carbon monoxide concentration on the faction size at the recovery zone height of 78 mm**

Based on experimental data an equation was obtained that allows setting the optimal value of the height to diameter ratio of the recovery zone ensuring the maximum *CO* concentration depending on the surface area to the volume ratio of the fuel particles and equivalence ratio of air introduction into the gasifier (fig. 10.20).

The optimal values of the recovery zone height, obtained as a result of research, are in the range from 55 to 150 mm. The concentration of carbon monoxide in wood gas are in the range from 14 to 29.9% at compliance with the optimal values of the recovery zone height.

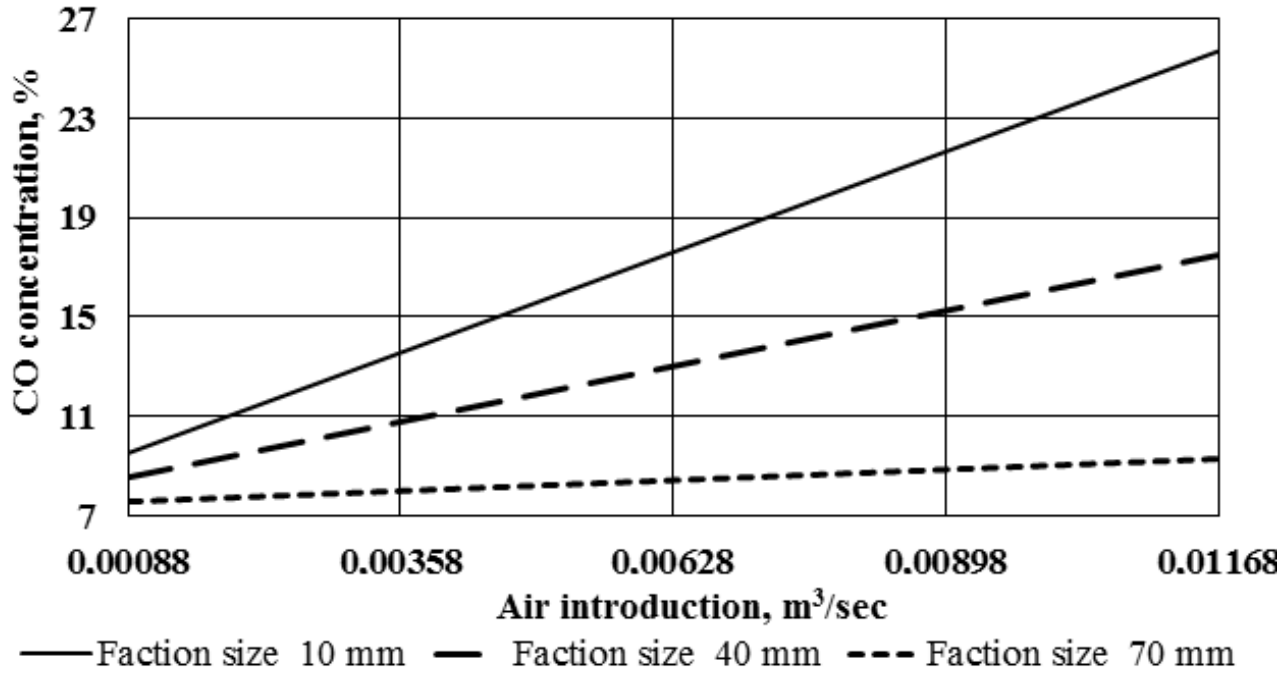


**Fig. 10.19. The dependence of the carbon monoxide concentration on the air introduction at the recovery zone height of 78 mm**

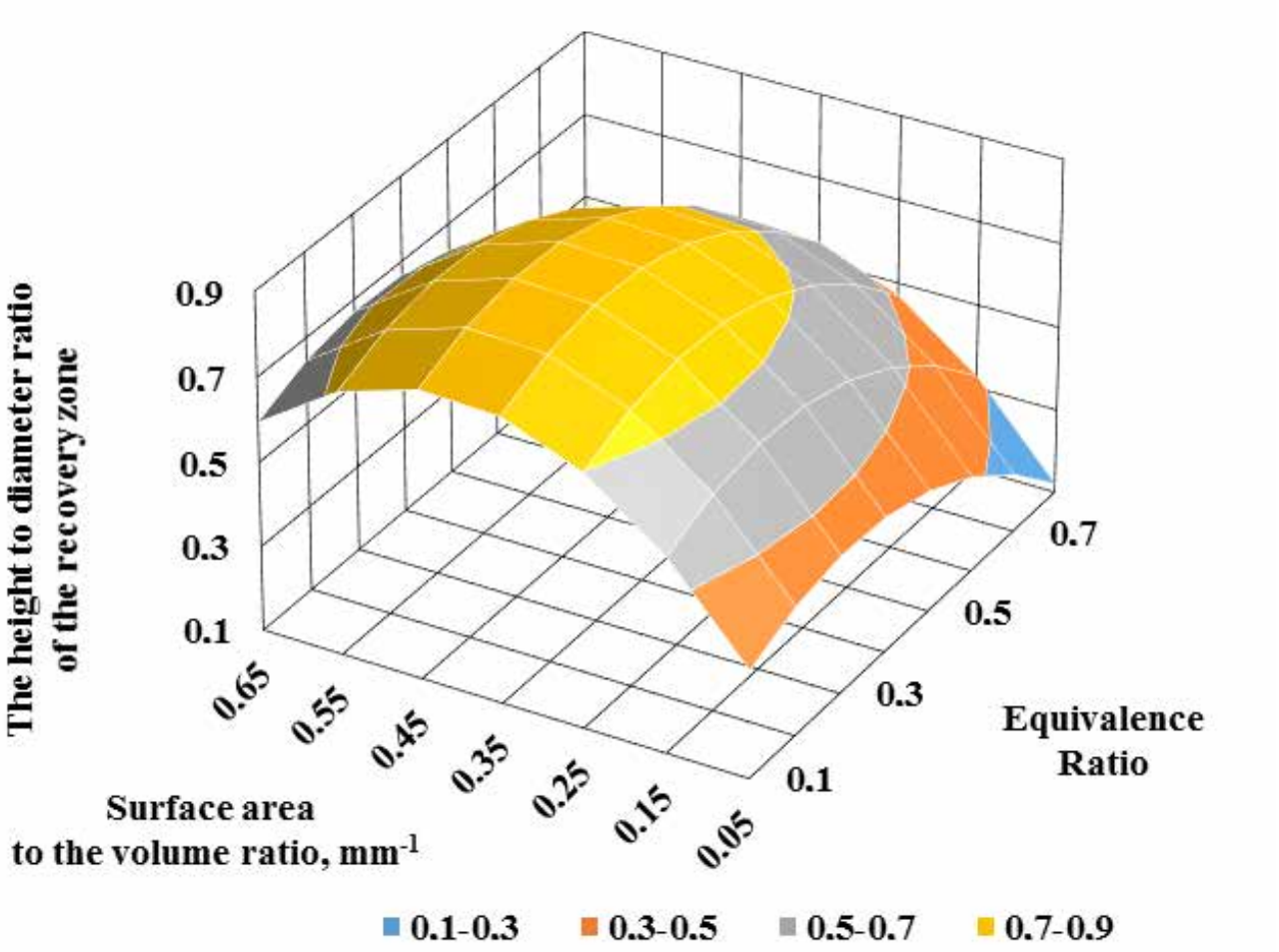


**Fig. 10.20. The dependence of the optimal values of the height to diameter ratio of the recovery zone on the ratio of the surface area to the volume of the fuel particles and equivalence ratio of air introduction into the gasifier**

The influence of straw pellet content in fuel on concentration (fig. 10.21) and volume of *CO* (fig. 10.22) in the generator gas was studied.

As it follows from analysis of the obtained graphic dependence, with an increase in straw content in fuel from 0 to 100%, the *CO* concentration also increased from 10.8 to 19.4%. With an increase in content of straw in the fuel from 0 to 100 %, volume of *CO* also increased from 0.0012 $m^3/s$ to 0.0020 $m^3/s$.

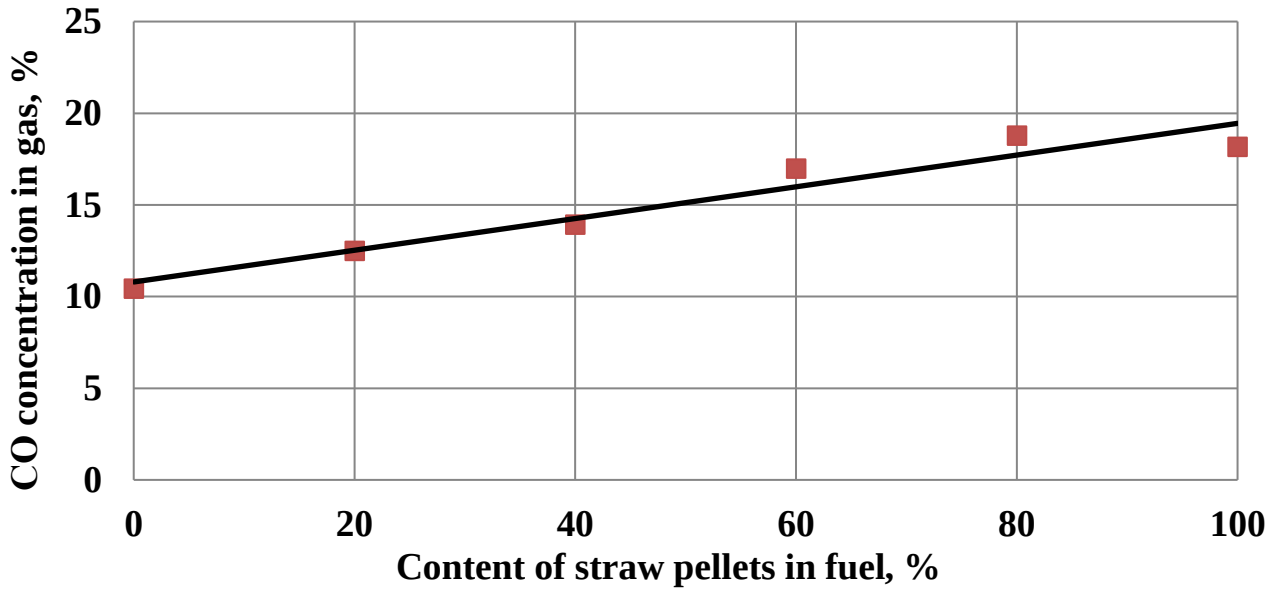


**Fig. 10.21. Dependence of *CO* concentration in the generator gas on content of straw pellets in the fuel**

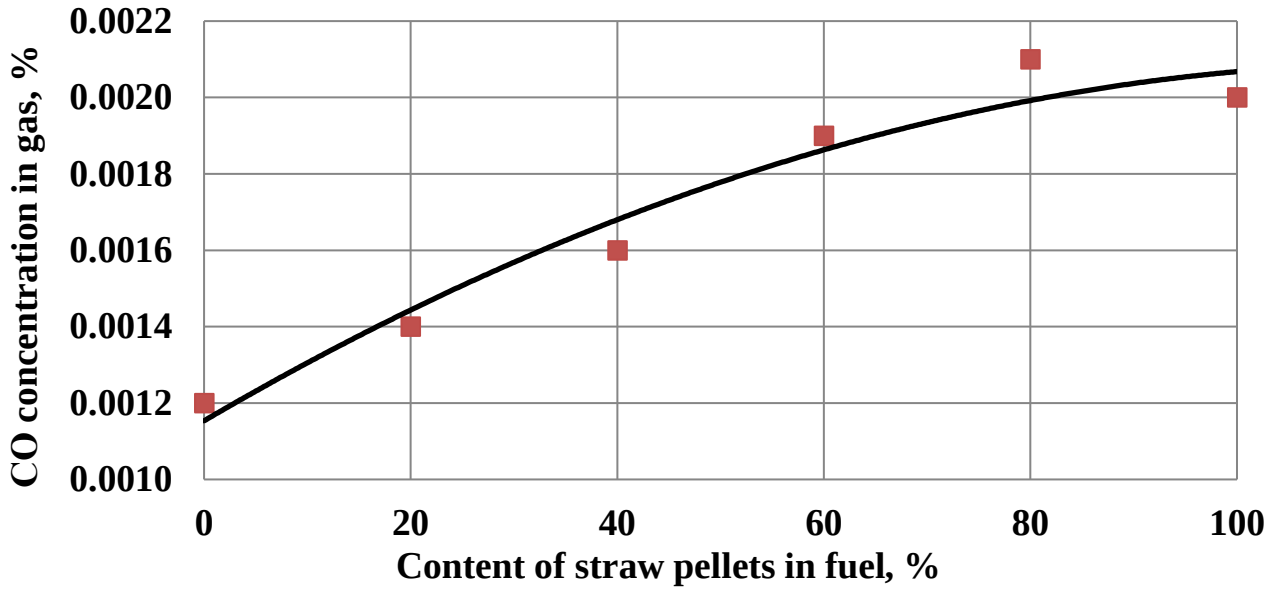


**Fig. 10.22. Dependence of *CO* yield on content of straw pellets in the fuel**

As it follows from the analysis with an increase in straw content in fuel from 0 to 100%, was increased as the *CO* concentration from 10.8 to 19.4% so the volume of *CO* from 0.0012 $m^3/s$ to 0.0020 $m^3/s$.

The nature of dependences is explained by the fact that temperature of the material layer in which gasification processes take place in the gasifier grows with

increase in amount of straw in the fuel. Generation of $CO$ from hot carbon and $CO_2$ is one of main heterogeneous reactions in the regeneration zone. As gasification proceeds, $CO_2$ is absorbed by the Boudouard reaction: $C+CO_2 \rightarrow 2CO$. It is promoted by high temperature of the fuel layer in the gasifier. This explains the cause of growth of molar CO fraction when temperature of the fuel layer in the gasifier increases, and, consequently, when quantity of straw in the fuel increases.

It should be noted that when more than 60 % of straw was used in the fuel, a phenomenon of formation of solid glassy deposits (agglomerates) on the grate surface was observed (fig. 10.23).

The presence of sediments is explained by the content of silicon, potassium, sodium, and other low-melting matter in the straw ash which caused formation of ash and slag agglomerates on the grate surface. It should be noted that when fuel with a 40 % or less content of straw pellets was used for the above-mentioned time of the gasifier operation, no deposits on the grate were observed.

Analysis of the obtained experimental results shows that the decisive factor for the further development of the technological scheme of gasification of straw-containing fuels and obtaining of high $CO$ content in the combustible gas is the maintenance of a slag-free gasification condition.


a)
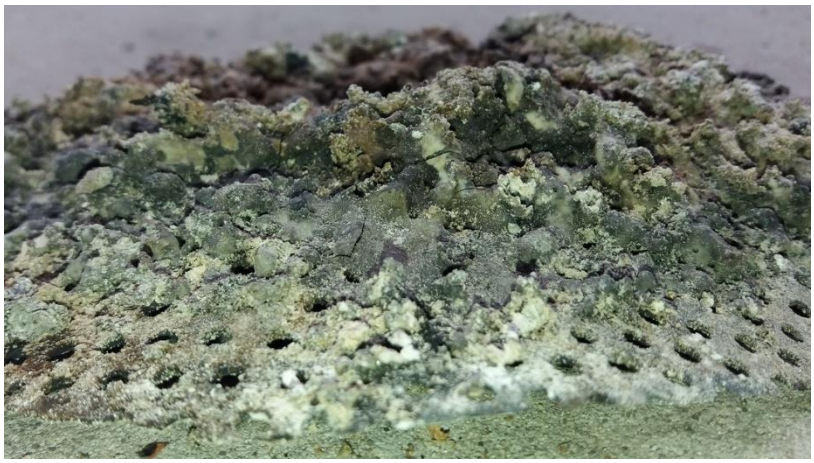
b)

**Fig. 10.23. Solid glassy deposits on the grate surface when the gasifier operated an 80% (a) and at a 100% (b) straw content in the fuel**

The use of fuel with straw content above 40% requires the gasifier design, which will avoid formation of firm deposits on the working surfaces.

To test the process of generator gas production from straw pellets, we offer the original design of the gasifier (fig. 10.24). The gasifier consists of a combustion (oxidation) zone 5, a recovery zone 1, a fuel hopper 6, a bunker for ash 10, an oxidizer supply chamber 7, a generator gas offtake manifold 9, oxidizer supply 4 and generator gas offtake 8 pipes. In the side surface, evenly spaced vertical grooves 2 are made in the recovery zone of the generator gas 1. On the outside of the surface of the generator gas recovery zone 1, valves 3 are installed. The valves can be moved vertically. Moving the valves allows reaching the required height of the recovery zone and coordinating the useful area of generator gas offtake with the modes of oxidizer supply to the combustion (oxidation) zone.

The removal of gas from the recovery zone takes place through the vertical grooves 2 of the side surface of the recovery zone 1. Therefore, there is no need to install a horizontal grate, which mainly causes the formation of ash and slag agglomerates.

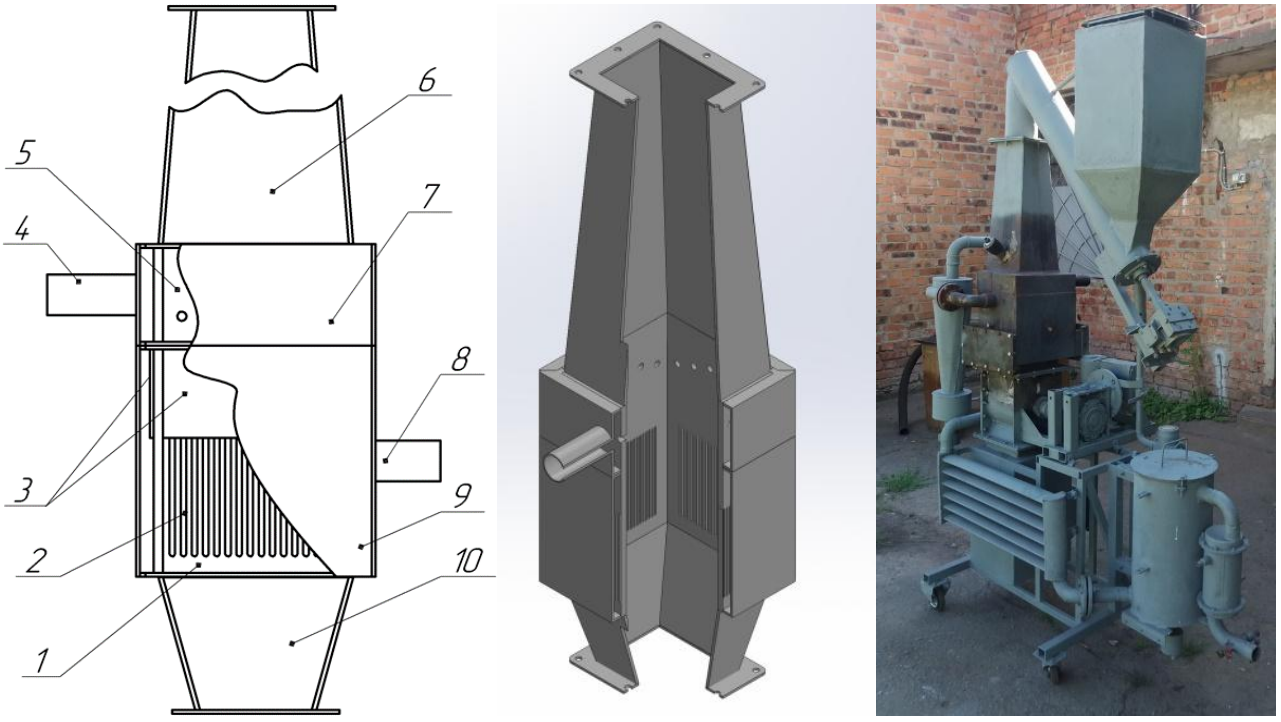


a) b) c)

**Fig. 10.24. Diagram and appearance of equipment used in the research: a - diagram of the gasifier; b - layout; c - the general appearance of the gasifier for using straw pellets**

The influence of the design and operation parameters of the gasifier on the concentration of carbon monoxide (*CO*) in the generator gas was studied in the laboratory using the developed plant shown in fig. 10.25.

The plant consisted of a gasifier 5 with an adjustable height of the recovery zone, a centrifugal discharge fan 2 with an adjustable air supply capacity to the combustion (oxidation) zone of the gasifier, a mixer 10 equipped with a centrifugal discharge fan, and other components.

A graphical dependency of the *CO* content on the height of the recovery zone at the minimum, average, and maximum air supplies in the combustion (oxidation) zone of the gasifier is shown in fig. 10.26.

The analysis of the graphs demonstrated that at the minimum airflow of 3.8 l/s, the optimum height of the recovery zone with the maximum *CO* concentration is 100±2 mm. At an average airflow of 8.3 l/s, the optimal recovery zone height is 90±2 mm, and at a maximum flow of 12.8 l/s, the optimal recovery zone height is 70±2 mm.

When the gas flow passes through the material layer in the recovery zone, carbon monoxide ($CO_2$) reacts with carbon, and as a result, carbon monoxide (*CO*) is formed. If the recovery area is not high enough, the recovery process is partially completed,

and if the height is too high, the temperature regime deteriorates and the resistance to gas passing through the recovery zone increases significantly. This leads to a decrease in the content of combustible substances in the generator gas. In addition, it is important to coordinate the speed of gas passing through the recovery zone and the height of the

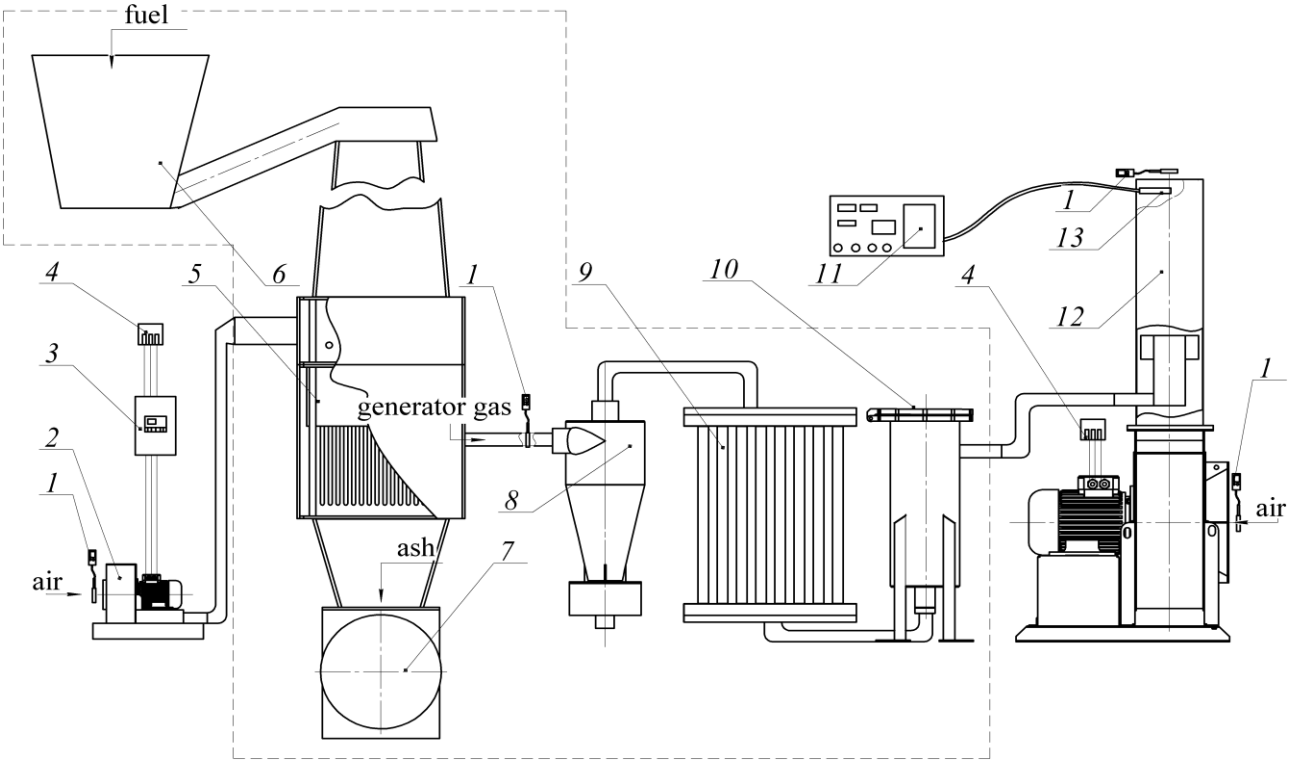


**1 – anemometer; 2 – a fan for supplying air to the gasifier; 3 – the frequency converter; 4 – source of electric current of 0.4 kV; 5 – gasifier GG-2; 6 – bunker with a screw for fuel; 7 – ash discharger; 8 – coarse mesh filter; 9 – cooler; 10 – fine filter; 11 – gas analyzer; 12 – mixer; 13 – gas analyzer sensor.**
**Fig. 10.25. The scheme of the experimental plant**

The optimal height of the recovery zone decreases as the air supply increases, which can be explained by the high speed of gas passing through the recovery zone, and as a result, the increased temperature in the recovery zone. At the same time, if the recovery zone is too high, the generator gas is re-oxidized, which also reduces the content of combustible substances in the gas.

A special pilot plant was used to conduct the experimental studies of the operation of the power plant fuelled by generator gas obtained from straw (fig. 10.27). It was conducted the check of parameters of generator gas power plant operation with a fixed air supply level of 12.8 l/s into the gasifier combustion zone, and the height of the recovery zone corresponded to the maximum concentration of *CO* in the gas.

Conducted research allowed to obtain empirical dependences of gas and air consumption by the power plant engine on the generated electric power (fig. 10.28).

From the analysis of the graph it was found that with an increase in electric power by 13 times (from 0.24 to 3.15 kW), there is a linear increase in generator gas consumption by 1.23 times (from 0.18 to 0.22 $m^3$/min) and air consumption by 1.15 times (from 0.312 to 0.36 $m^3$/min). At the same time, there was a linear increase in the

ratio of consumed gas to consumed air from 0.58 to 0.62. In addition, when using generator gas as a fuel, there was observed the *CO* emissions reduction in the power plant engine by 25 times, and *CH* emissions – by 4 times, when compared to the use of gasoline.

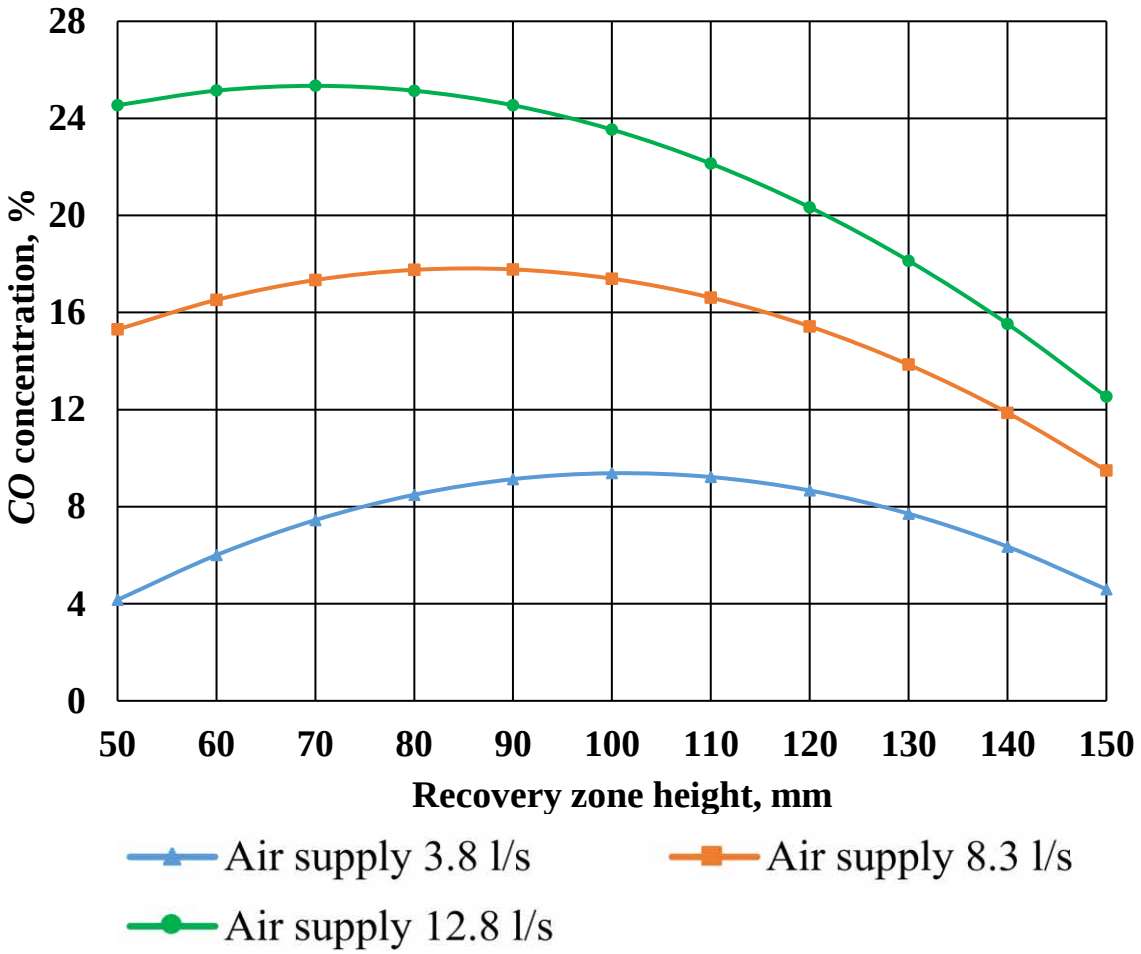


**Fig. 10.26. Graphs of the dependence of the *CO* concentration on the recovery zone height at the minimum, average, and maximum air supplies in the combustion (oxidation) zone of the gasifier**

Using of the gasifier without grate allows constantly receive generator gas from the straw pellets and allowed to avoid formation of ash and slag agglomerates on the surface of the grate, which has not been achieved in known studies.

### 10.6. Prospects for generator gas production in Ukraine

Approximately 109 million tons of agricultural production residues (grain straw, corn stigmas and stems, sunflower baskets, etc.) are generated annually in the agro-industrial complex of Ukraine, of which 49 million tons are disposed inefficiently and only 60 million tons are used for further processing.

Out of 49 million tons of unused waste, almost 20 million tons can be used for the implementation of economically justified projects for energy production in general, including using gas-generating technologies in particular.

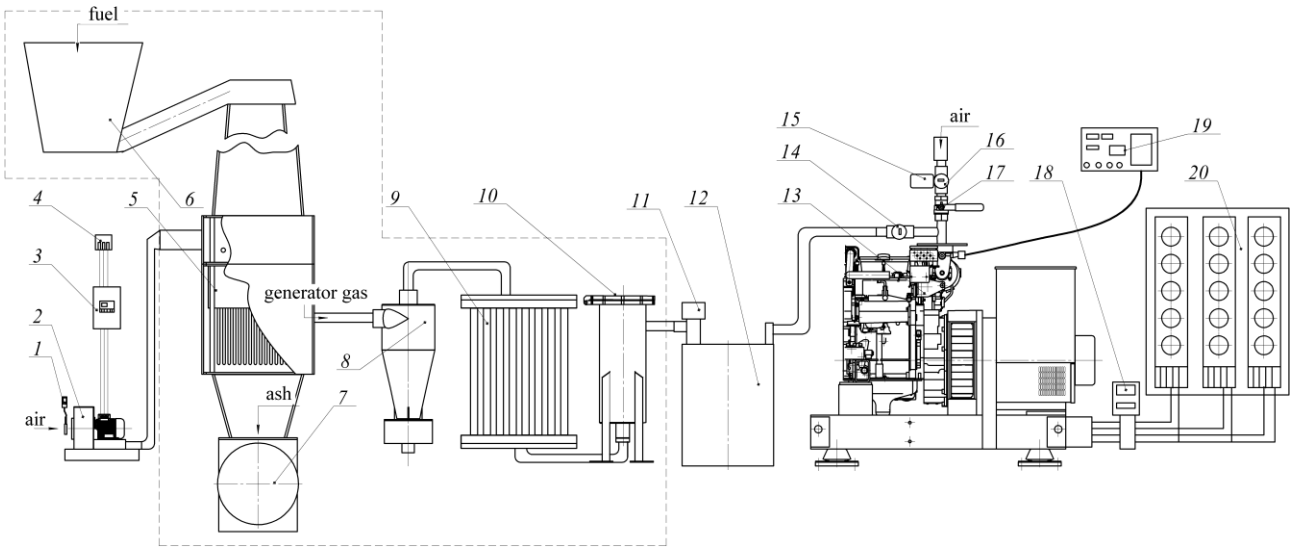


**1 – anemometer; 2 – a fan for supplying air to the gasifier; 3 – the frequency converter; 4 – source of electrical energy 0.4 kV; 5 – gasifier GG-2; 6 – bunker with a screw for fuel; 7 – ash discharger; 8 – prime filter; 9 – cooler; 10 – fine filter; 11 – valve; 12 – receiver; 13 - power plant; 14 – gas meter; 15 – blower; 16 – air counter; 17 – air supply regulator; 18-device for measuring current consumption parameters; 19 - exhaust gas analyzer; 20 - electric load.**

**Fig. 10.27. Plant appearance for the study of the working process of the generator gas power plant**

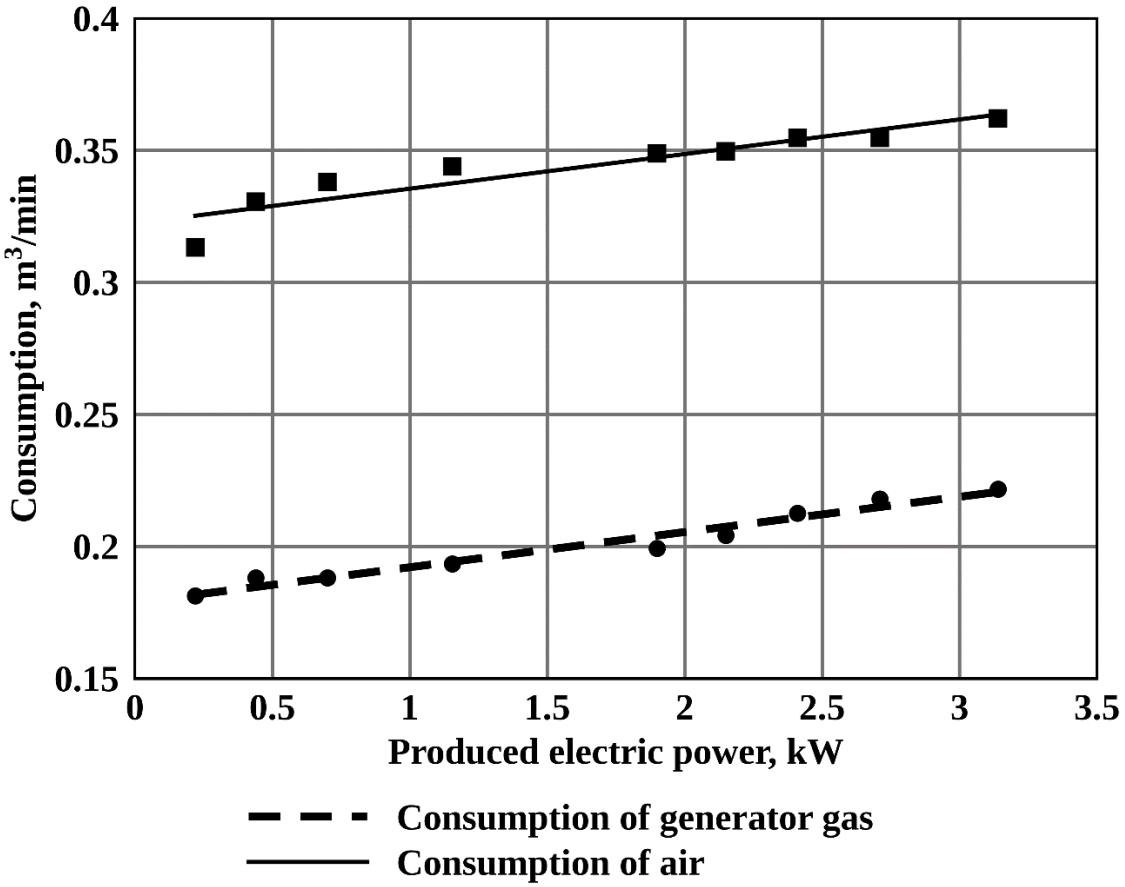


**Fig. 10.28. Consumption of generator gas and air depending on the produced electrical power**

Projects for the production of heat and electricity are very expensive. For example, to purchase the necessary equipment and implement the above-mentioned projects for the production of heat and electricity (out of 20 million tons of the affordable residues of agricultural production) with a payback period of less than five years, investments of more than €2 billion are required. As a result of processing such a large amount of plant residues of agricultural production, energy equivalent to 9 million TOE can be obtained, or 73 TWh per year, while the Ukrainian industry consumes about 36 million TOE of electricity per year. Consequently, the implementation of the proposed projects will provide 25% of the Ukrainian industry's energy needs, which will reduce Ukraine's need for natural gas imports by 8 billion $m^3$ per year.

Projects related to the gasification of solid biomass of agricultural enterprises for the purpose of generating electric and thermal energy require investments ranging from €10,000 to €39,000 per ton of biomass per day, depending on the complexity of the equipment design. The payback period for these projects is approximately one to five years.

In addition, such projects are very environmentally friendly by reducing $CO_2$ emissions, because when replacing the energy produced from 8 billion $m^3$ of natural gas, energy derived from agricultural waste will reduce greenhouse gas emissions by about 15.8 million tons of $CO_2$ per year.

In 2016, the total volume of crops grown in crop production, such as cereals, industrial, fodder and vegetables, amounted to 59 million tons. In crop production and in the processing industry, 80 million tons of agricultural production residues are generated annually. Of these, 60 million tons are primary waste generated after harvesting, and 20 million tons are secondary waste obtained as a result of technological processes of processing target raw materials into food products.

Grain straw is the largest fraction of primary crop production waste – 24 million tons. Of these, 18 million tons are the primary waste of ear crops (wheat and barley), which accounts for 23% of crop production waste, from which it is advisable to produce power and electric energy, including by using gas-generating technologies.

So, ear straw is one of the most relevant types of raw materials for energy production by gasification due to the following factors:

– a significant amount of reserves (18 million tons);

– high indicator of available quantity (7.8 million tons);

– high calorific value during gasification (12,000-16,000 MJ/t).

Thus, one of the most effective methods of processing mainly dry waste of agro-industrial production (humidity should not exceed 40 %) for the production of power and electric energy is gasification.

If the green tariff is used, i.e. a higher tariff for electricity produced by burning generator gas from solid biomass, the payback period for gas-generating projects will be from 4 to 6 years.

It is advisable to organize the process of energy production during gasification of plant residues of agricultural production in Ukraine in one of the following ways:

– production of generator gas for thermal needs;

– production of generator gas for thermal power plants (CHPP) with combined production of heat and electricity;

– production of generator gas for power needs (operation of internal combustion engines, piston machines, etc.).

Gas-generating equipment for the production of thermal energy is conventionally classified into gasifiers for farms (installed capacity up to 1 MW) and central boiler houses with gasifiers (installed capacity over 1 MW).

Capital expenditures for the installation of gasifier plants the combustion of solid biomass on farms and in central boiler houses depend on the installed capacity of the equipment. The lowest specific capital expenditures in the amount of €10,000 per 1 ton of solid biomass used per day are accounted for by gasifiers with automatic fuel supply with an installed capacity of 1 MW or more.

The largest unit costs in the amount of up to €38,000 per 1 ton of plant residues of agricultural production per day are required by batch gasifiers with an installed capacity of 150 kW. Another important item of operating costs for gasifier plants with a periodic fuel loading system to the hopper is the remuneration of operators who load fuel. When using gasifier plants with automatic fuel supply to the gasifier hopper, there is no similar cost item, but there are higher operating costs associated with the maintenance of automatic systems.

The method of using solid biomass, associated with the operation of gasifier plants at CHPP with an installed electric capacity from 2 to 20 MW and a thermal capacity from 5 to 60 MW, provides the production of electric and thermal energy with unit costs ranging from €30,000 to €39,000 per 1 ton of raw materials used per day. When implementing projects for processing plant residues into thermal and electric energy at CHPP, the owner of an agricultural enterprise should take into account the possibility of using a green tariff for renewable electric energy from biomass. When producing electric energy and selling it to the central power grid at a green tariff, the payback period for projects on gasification of agricultural biomass at CHPP is reduced from 4-5 years to 2.5-3 years.

If we consider the possibility of using gas-generating technologies at a particular enterprise in the agricultural sector of Ukraine, the following steps should be performed for each enterprise separately:

1. evaluate the potential of formation and specific characteristics of raw materials of plant origin that are available;
2. determine the purpose for which this raw material will be processed;
3. choose processing equipment and technologies;
4. choose a technology and equipment supplier;
5. choose a project financing method.

The introduction of the above-mentioned steps will allow Ukrainian enterprises to get rid of energy dependence on fuels of traditional origin and will allow both to meet their own energy needs and supply energy resources to the central networks of the state.

In addition to the above facts, the use of gas-generating technologies also has a number of economic and environmental advantages over traditional fuels, the main one of which is that financial flows associated with the processing and use of energy

biomass are closed within the region, and the money paid by energy consumers for local raw materials remains in the region and contributes to its economic development. Replacing the consumption of 55 to 60% of fossil and petroleum fuels in the region with renewable fuels is equivalent to attracting an additional 50 to 80 million euros to the regional budget, annually. Environmental benefits include reduced emissions of harmful gases.

Accordingly, when using generator gas as motor fuel, according to the results of studies performed using the same engine, the content of harmful substances during the combustion of the amount of fuel equivalent to 1 kg of gasoline is on average: $CO$ – 315 g; $C_nH_m$ – 14 g; $NO_x$ – 9 g, which is two times less than when burning gasoline.

So, modern agriculture in Ukraine requires the creation and implementation of modern technologies that ensure an increase in environmental friendliness and energy efficiency of production facilities, reducing energy intensity and production costs.

**Questions for self-assessment:**

1. How is the ability of ash to melt determined?
2. Specify the stages of ash melting with temperature limits.
3. What are the requirements for biofuels for generator gas production?
4. Describe straw as a raw material for the production of generator gas. Indicate its advantages and disadvantages compared to wood.
5. Provide a detailed classification of plant residues.
6. What types of generator gases are available depending on the type of blow?
7. Define the gasification process. Give a classification of gasification processes by the nature of the gas flow direction.
8. What is a gasifier? Give a classification of gasifiers.
9. What are the zones, depending on the nature of the gasification process and the changes that occur with the fuel allocated in the gasifier?
10. Describe the oxidation zone.
11. Describe the reduction zone.
12. Describe the dry distillation zone.
13. Give the main chemical reactions of the gas-generating process.
14. Specify the main stages of the generator gas production process.
15. Why is it necessary to clean and cool the resulting generator gas?
16. What is the output of generator gas from wood and from major crops?
17. Describe the design and operating principle of a gasifier.
18. What is a scrubber? Describe the design and operating principle of a scrubber.
19. What is a cyclone? Describe the design and operating principle of a cyclone.
20. Why does a gasifier plant use a disintegrator and an electric filter?
21. Describe the technology of obtaining generator gas in a plant based on a fluidized bed gasification column.
22. Describe the technology of obtaining generator gas using a mobile gasifier plant.
23. Describe the design and operating principle of the gasification chamber of a gasifier plant?

24. Describe the design of a mobile gasifier plant trolley and the principle of location and attachment of the main installation units on the trolley.

25. Which countries are leaders in generator gas production?

26. What are the main areas of generator gas use?

27. Why is it necessary to prepare raw materials for gasification?

28. What are the main disadvantages of using generator gas in internal combustion engines?

29. What do you know about generator gas production in the world?

30. What do you know about generator gas production in Ukraine?

31. What examples do you know of using generator gas to generate electricity?

32. What examples do you know of how motor vehicles run on generator gas?

33. What are the risks when using generator gas to power energy installations?

**References:**


1. Abatzoglou N., Legast P., Delvaux P., Bangala D., Chornet E. Gas conditioning technologies for biomass and waste gasification. *Proceedings of the 3rd Biomass Conference of the Americas*. 1997. Vol. 1. P. 599–606.

2. Basu P. Biomass gasification, pyrolysis and torrefaction : practical design and theory. 2nd ed. London ; San Diego : Academic Press, 2013. 530 p.

3. Biological resources and technologies of biofuel production : monograph / Ya. Blum, G. Geletukha, I. Grigoryuk et al. Kyiv : Agrar Media Group, 2010. 408 p.

4. CEN/TS 14918:2005. Solid biofuels. Method for the determination of calorific value. Brussels : CEN, 2005.

5. Dubrovin V. O., Korchemny M. O., Maslo I. P., Sheptytsky O., Rozhkovsky A., Pastorek Z., Gzhibek A., Yevych P., Amon T., Krivoruchko V. V. Biofuels (technology, machinery and equipment). Kyiv : CTI “Energy and Electrification”, 2004. 256 p.

6. Dubrovin V. O., Romanchuk L. D., Kukharets S. M., Grabar I. G., Los L. W., Golub G. A., Dragnev S. V., Polishchuk V. M., Kukharets V. V., Nezdvetskaya I. V., Shubenko V. O., Holubenko A. A., Tsyvenkova N. M. Prospects for the development of alternative energy in Polissya of Ukraine. Kyiv : Center for Educational Literature, 2014. 335 p.

7. Gas generator : pat. 80582 Ukraine : IPC C10J 3/00 / N. M. Tsyvenkova, A. A. Holubenko ; applicants and patent owners N. M. Tsyvenkova, A. A. Holubenko. No. u201212030 ; appl. 19.10.2012 ; publ. 10.06.2013, Bull. No. 11.

8. Gebhard S. C., Scahill J. W., Gregoire C. E. Characterization of biomass gasifier tar and ash : Process Research Branch – milestone completion report. Colorado, 1993. 204 p.

9. Generator gas : the Swedish experience from 1939–1945 / transl. by the Solar Energy Research Institute. Golden, Colorado, 1979. 344 p.

10. Golub G. A. Energy Autonomy of Agricultural Systems. *Bulletin of Agricultural Science*. 2010. No. 3. P. 50–54.

11. Golub G. A., Dubrovin V. O. Engineering problems of production and use of biofuels in agro-industrial complex. *Bulletin of Agricultural Science*. 2010. Special issue. P. 82–87.

12. Golub G. A., Kukharets S. M., Čėsna J., Skydan O. V., Yarosh Y. D., Kukharets M. M. Research on changes in biomass during gasification. *INMATEH – Agricultural Engineering*. 2020. Vol. 61, No. 2. P. 17–24.

13. Golub G. A., Kukharets S. M., Shubenko V. O., Bovsunivska N. M. Peculiarities of biofuel production and energy production in the conditions of agro-industrial production. *Machinery and technologies of agro-industrial complex*. 2015. No. 2 (65). P. 31–34.

14. Golub G. A., Kukharets S. M., Skydan O. V., Yarosh Y. D., Chuba V. V., Golub V. The optimization of the gasifier recovery zone height when working on straw pellets. *International Journal of Renewable Energy Research*. 2020. Vol. 10, No. 2. P. 529–536.

15. Golub G. A., Kukharets S. M., Tsyvenkova N. M., Yarosh Y. D., Chuba V. V. Experimental study into the influence of straw content in fuel on parameters of generator gas. *Eastern-European Journal of Enterprise Technologies*. 2018. Vol. 5, No. 8 (95). P. 76–86.

16. Golub G. A., Kukharets S. M., Yarosh Y. D., Chuba V. V. Method for optimization of the gasifier recovery zone height. *Journal of Sustainable Development of Energy, Water and Environment Systems*. 2019. Vol. 7, No. 3. P. 493–505.

17. Golub G. A., Lukyanets V. O., Subota S. V. Heat of combustion and conditions of straw burning. *Scientific Bulletin of National University of Life and Environmental Sciences of Ukraine. Series: Machinery and energy of agro-industrial complex*. 2009. Iss. 134, Part 2. P. 275–278.

18. Handbook biomass gasification / ed. H. Knoef. 2nd ed. Enschede : BTG Biomass Technology Group, 2012. 500 p.

19. Heidenreich S., Müller M., Foscolo P. U. Advanced biomass gasification : new concepts for efficiency increase and product flexibility. London : Academic Press, 2016. 140 p.

20. Higman C., van der Burgt M. Gasification. Amsterdam : Gulf Professional Publishing, 2008. 456 p.

21. Holubenko A. A., Tsyvenkova N. M., Mulyar O., Romanushun O. Biomass standardization as a base for its sufficient use. *Teka*. 2011. Vol. XI A. P. 85–91.

22. Kaletnyk G. M. Development of the biofuels market in Ukraine : monograph. Kyiv : Agrarian Science, 2008. 464 p.

23. Kaupp A. Gasification of rice hulls : theory and praxis. Braunschweig : Friedr. Vieweg & Sohn, 1984. 303 p.

24. Kukharets S. M., Golub G. A., Skydan O. V., Yarosh Y. D., Kukharets M. M. Justification of air flow speed in the oxidation area of a gasifier in case of straw pellets using. *INMATEH – Agricultural Engineering*. 2020. Vol. 60, No. 1. P. 37–44.

25. Kukharets S. M., Golub G. A., Wrobel M., Sukmaniuk O., Mudryk K., Hutsol T., Jasinskas A., Jewiarz M., Cesna J., Horetska I. A theoretical model of the gasification rate of biomass and its experimental confirmation. *Energies*. 2022. Vol. 15, Iss. 20. Article 7721.

26. Liinanki L., Svenningsson P., Thessen G. Gasification of agricultural residues in a downdraft gasifier. *Energy from Biomass*. 1985. P. 832–836.

27. Los L. V., Ivantsov V. V. Investigation of design features of transport gas generators for gasification of crushed and briquetted straw. *Bulletin of Zhytomyr National Agroecological University*. 2010. No. 2. P. 127–139.

28. Los L. V., Tsyvenkova N. M. The problem of energy carriers and its solution in the agriculture of Ukraine with bioenergy gas generators. *Bulletin of the State Agroecological University*. 2004. No. 2 (13). P. 3–21.

29. Melnichuk M. D., Dubrovin V. O., Mironenko V. G., Grigoryuk I. P., Polishchuk V. M., Golub G. A., Targonya V. S., Dragnev S. V., Svistunova I. V., Kukharets S. M. Alternative energy : textbook. Kyiv : Agrar Media Group, 2012. 244 p.

30. Milne T. A., Evans R. J., Abatzoglou N. Biomass gasifier "tars": their nature, formation, destruction, and tolerance limits in energy conversion devices. *Proceedings of the 3rd Biomass Conference of the Americas*. 1997. Vol. 1. P. 729–738.

31. Mironenko V., Polishchuk V., Zakharkov G. Methodology of rational choice of equipment for the production of biofuels. *Scientific Bulletin of National University of Life and Environmental Sciences of Ukraine*. 2011. Iss. 166, Part 2. P. 148–152.

32. Pandey S. The biomass gasifier : theory, practice and development guide. London : LAP LAMBERT Academic Publishing, 2015. 448 p.

33. Production of energy from straw. Situation, technology and innovation in Denmark. URL: http://uabio.org/img/files/news/pdf/straw-to-energy-demark.pdf (date of access: 12.09.2023).

34. Reed T. B., Das A. Handbook of biomass downdraft gasifier engine systems. Golden : Solar Energy Research Institute, 1988. 140 p.

35. Rensfelt E. Practical achievements in biomass gasification. London : Elsevier Applied Science, 1985. Vol. 1. 174 p.

36. Samilin O. O., Tsyvenkova N. M., Holubenko A. A. Modern energy efficiency technologies for the use of biomass waste in agriculture, forestry and utilities. *Bulletin of Zhytomyr National Agroecological University*. 2009. No. 1 (24). P. 269–278.

37. Ståhlberg P., Kurkela E., Filen H., Salo K. Updraft gasification of waste fuels. *Pyrolysis and Gasification* : European Symposium, Luxembourg, 23–25 May 1989. P. 603–607.

38. Tsyvenkova N. M., Samilin O. O. Perspectives of constructive development of automobile gas-generating units in the historical aspect of their creation. *Bulletin of the State Agroecological University*. 2005. No. 2 (15). P. 307–326.

39. Vares V., Kask Ü., Muiste P., Pihu T., Soosaar S. Manual for biofuel users. Tallinn : Tallinn University of Technology Press, 2005. 178 p.

40. Yarosh Y. D., Golub G. A., Kukharets S. M., Chuba V. V. Experimental study of wood gas-operated power plant operation. *Engineering for Rural Development* : proceedings of the 18th International Scientific Conference, Jelgava, 22–24 May 2019. Jelgava, 2019. P. 1337–1343.

41. Golub G., Tsyvenkova N., Golub, V., Chuba V., Omarov I., Holubenko A. Determining the effect of the structural and technological parameters of a gas blower unit on the air flow distribution in a gas generator. *Eastern-European Journal of Enterprise Technologies Energy-saving technologies and equipment*. 2022. No. 4/8 (118). P. 29–43.

# 11. PYROLYSIS OF PLANT BIOMASS

**Lecture Plan:**

**11.1. General information about the process of pyrolysis of solid plant raw materials 269**
**11.2. Fundamentals of pyrolysis of plant biomass 273**
**11.3 Technological schemes of pyrolysis of plant biomass 275**
**11.4. Global experience in implementing plant biomass pyrolysis technologies 280**

## 11.1. General information about the process of pyrolysis of solid plant raw materials

**Pyrolysis** (from the Greek pyro – fire and lysis –decomposition), or dry distillation – the technological process of thermal decomposition (destruction) of the organic part of solid plant biomass into gases (i.e. volatile substances), solid (biochar) and liquid (pyrolysis liquid) products.

Schematically, the process of pyrolysis of solid plant biomass (SPB) has the record:

$$\text{SPB+ warmth} = C\ \text{(carbon)} + C\ \text{(resins)} + CO + CO_2 + CH_4 + C_nH_m + H_2 + H_2O \quad (11.1)$$

Decomposition of the organic part of solid plant raw materials during pyrolysis is accompanied by the interaction of fuel carbon with bound oxygen and water to form liquid hydrocarbon compounds, resins, gases ($CO_2$, $CH_4$, $H_2$, $CO$, etc.) and a solid carbon residue (biochar):

$$C + 0.5O_2 = CO + 123\ \text{MJ/kmol}; \quad (11.2)$$

$$C + H_2O = CO + H_2 - 118.7\ \text{MJ/kmol}; \quad (11.3)$$

$$C + 2H_2O = CO_2 + 2H_2 - 75.5\ \text{MJ/kmol}; \quad (11.4)$$

$$CO + 0.5O_2 = CO_2 + 284\ \text{MJ/kmol}; \quad (11.5)$$

$$CO_2 + C = 2CO - 161.5\ \text{MJ/kmol}; \quad (11.6)$$

$$CO + H_2O = CO_2 + H_2 + 43.6\ \text{MJ/kmol}. \quad (11.7)$$

The general classification scheme for pyrolysis systems is given in fig. 11.1, and the list of the main processes of pyrolysis of solid plant biomass and their characteristics is given in table 11.1.

Depending on the rate of decomposition of solid plant biomass, pyrolysis is divided into: *instantaneous* (speed over 1,000°C /sec); *fast* (from 10 to 200°C/sec); *moderate* (from 1 to 10°C/sec) and *slow pyrolysis* (up to 60°C/min).

A mandatory condition for pyrolysis is to ensure a temperature regime in the range from 450 to 1,050°C. Depending on the temperature, pyrolysis is divided into *high-temperature* (900-1,050°C), *medium-temperature* (550-800°C) and *low-temperature* (450-600°C).

The pyrolysis process can provide:

– up to 40% biochar (subject to low-temperature pyrolysis and low heating rates);

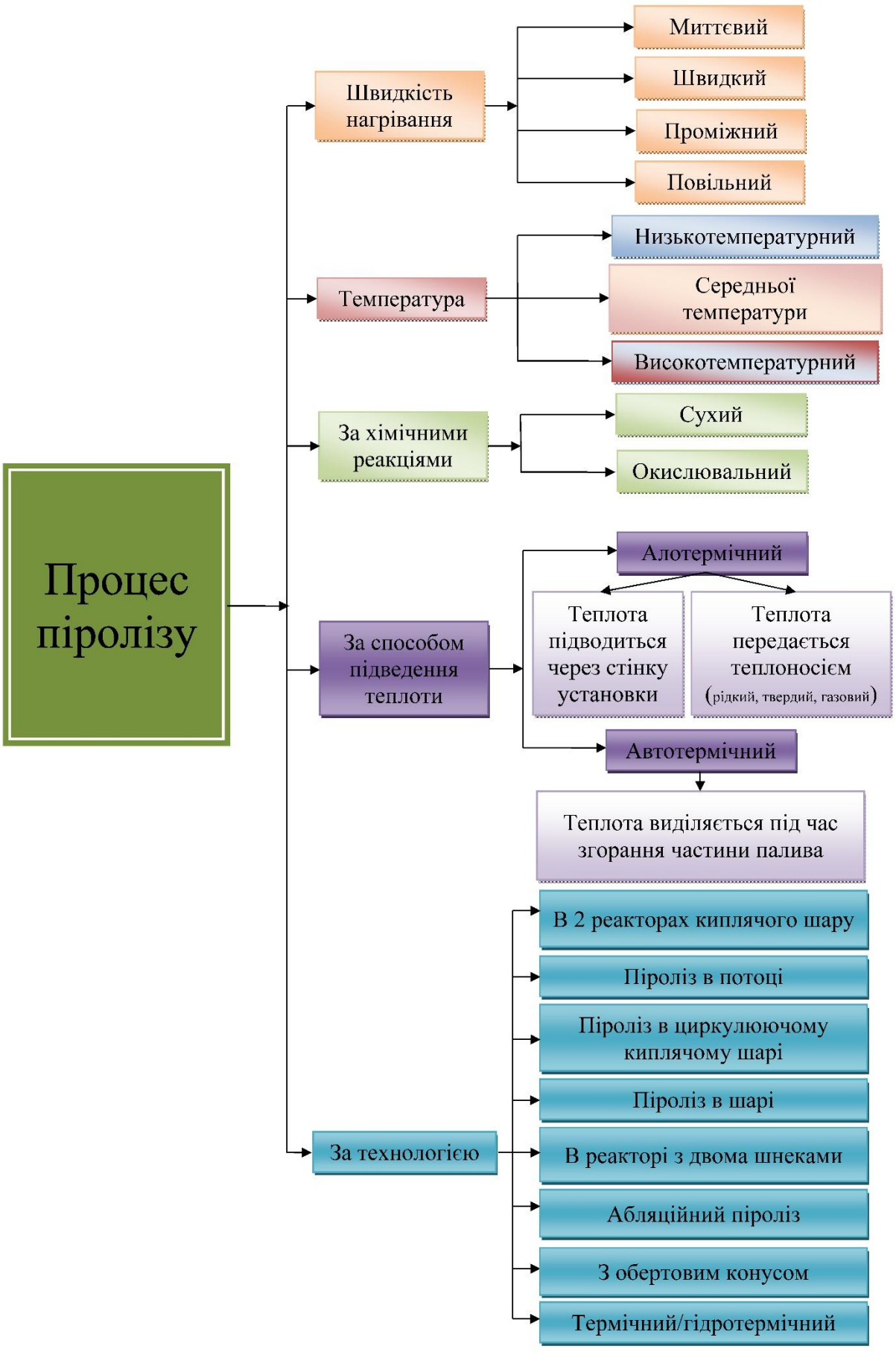


**Fig. 11.1. General classification scheme for pyrolysis systems**

– up to 75% by weight of the raw material of the liquid fraction (subject to low-temperature pyrolysis and high heating rates);

– up to 85% by weight of the feedstock of pyrolysis gas (subject to medium and high-temperature pyrolysis.

The process of pyrolysis of solid plant biomass occurs, as a rule, at atmospheric pressure. According to the types of chemical reactions, the pyrolysis process is divided into two main types:

– *dry pyrolysis* – the process of thermal decomposition of raw materials in the absence of oxygen;

– *oxidative pyrolysis* – the process of thermal decomposition of raw materials under the condition of its partial combustion or under the condition of its direct contact with the products of fuel combustion.

**Table 11.1. Technologies of pyrolysis of solid plant biomass [source: Use of biomass in metallurgical production / A.S. Koveria, L.G. Keush, A.G. Starovoit. Problems of chemmotology. Theory and practice of rational use of traditional and alternative fuel and lubricants. Monograph by general edition of Prof. S. Boychenko. – K.: Center for educational literature, 2017, pp. 170-172]**

| **Pyrolysis characteristics** | **Carbonation** | **Slow pyrolysis** | **Fast pyrolysis:** | |
|---|---|---|---|---|
| | | | **high temperature mode** | **low temperature mode** |
| Fuel biomass particle size, mm | to 50×50 | to 25×25 | from 5×5 to 2×2 | from 5×5 to 2×2 |
| Duration of the pyrolysis process, sec | From a few hours to several days | 300-1800 | 1 | 1 |
| Temperature range, °C | 400-600 | 500-650 | 650-1,050 | 450-600 |
| Humidity, % | 8-15% | to 12% | 2-6% | 2-6% |
| Pressure, kPa | 100 | 100 | 10–100 | 100 |
| Yield of pyrolysis products in % of dry weight of fuel raw materials calorific value | | | | |
| Biochar | 30-35 | 20-30 | to 20 | to 15 |
| Pyrolysis liquid | to 20 | to 30 | to 20 | to 80 |
| Pyrolysis gas | to 40 | to 40 | to 70 | to 30 |
| Calorific value of pyrolysis products, MJ/m$^3$ | | | | |
| Biochar | 30 | 30 | 30 | 30 |
| Pyrolysis liquid | 10-20 | 23 | 23 | 23 |
| Pyrolysis gas | 2-4 | 5-10 | 10-20 | 10-20 |

For the processing of solid plant biomass, dry pyrolysis is mainly used, which is widely used and is a promising method of solid organic waste disposal at the current level of technology development.

The yield of biochar is from 30 to 35% of dry plant biomass, and the lower calorific value of $Q_{LHV}$=28-35 MJ/kg. The main directions of using biochar are to meet the technological needs of industry; as fuel for domestic needs; as sorbents and mineral fertilizers.

*Liquid pyrolysis products* consist of water and high-molecular hydrocarbons. Their yield is from 18 to 20% of dry plant biomass. Pyrolysis fluids are raw materials for the chemical industry, fuel for boilers and other heat engineering equipment, and are used, after appropriate processing, to power diesel engines and drive gas turbines.

*Pyrolysis gas*, the yield of which is from 65 to 70% of dry plant biomass, and the calorific value is $Q_{LHV}$=14-24 MJ/Nm$^3$.

Pyrolysis processes according to the method of ensuring the thermal regime are divided into:

– *allothermic processes* in which the thermal energy required for the conversion of plant biomass enters the reaction zone from the outside. In this case, the thermal energy required for the conversion of plant biomass is transferred to the raw material particles by direct contact with a solid, gas or liquid heat carrier. Examples of such equipment are screw retorts, mine-type retorts, drum-type retorts, and Stafford retorts. The disadvantage of such retorts is that the humidity of fuel biomass must be less than 1% and it must be heated to 200 degrees. Raw materials are loaded in such quantities that the heat loss is less than the heat of exothermic reactions. This leads to an increase in the overall dimensions of retorts. Another option is to supply the heat carrier directly to the pyrolysis zone or use heat transfer through the wall. Such devices are designed for pyrolysis of plant raw materials regardless of its physical and chemical characteristics (humidity, ash content, fractional composition, ability to form slag). Their main advantage is the absence of ballast impurities and harmful substances in the gas phase, and the main disadvantage is the low speed of the process due to the difficulty of evenly transferring and distributing heat from the installation wall to the fuel biomass along the layer thickness. This results in low process productivity, low energy efficiency, and poor final product quality.

– *autothermal processes* in which the thermal energy required for the conversion of plant biomass is released during the combustion of part of the fuel. Heat losses should be minimal. The process temperature and fuel combustion rate are regulated by the blast mode. A sample of the equipment in which this method of heat supply is implemented is the Horreshoff furnace. Advantages of this method: there is no sintering of fuel particles; since the process temperature simultaneously changes evenly over the entire volume of the fuel biomass layer; the speed of the pyrolysis process increases; due to the direct transfer of heat from the heat carrier to the fuel biomass, heat carrier losses and heat losses are significantly reduced; the design is simple and has less weight and overall dimensions due to the lack of means for its additional external heating, which significantly reduces the cost of its manufacture, installation and operation. The disadvantage of this method is that depending on the physical and chemical properties of solid plant biomass and the methods of controlling the pyrolysis process, a significant part of the fuel is burned to ensure a high temperature of the process. Besides, the produced pyrolysis gas contains ballast impurities due to the heat carrier, free oxygen leads to sintering of fuel biomass, and pyrolysis gas is unstable in

chemical composition during the pyrolysis process.

The rate of heating of plant biomass to the decomposition temperature and the temperature conditions of destruction are the main factors that determine the rate of chemical reactions and the ratio of gaseous, solid and liquid products produced during thermal decomposition. By changing these parameters, you can adjust the chemical composition and yield of the final products of the pyrolysis process within a wide range.

The appropriate technology for pyrolysis of plant biomass is selected depending on what final product is planned to be obtained. The manufactured products can be used as independent energy sources to meet their own needs of the pyrolysis process, as well as for heating purposes and as fuel for internal combustion engines.

### 11.2. Fundamentals of pyrolysis of plant biomass

On average, for hardwoods, the following amount of pyrolysis products is produced: from 30 to 35% – biochar; from 45 to 50% – liquid condensate; from 15 to 20% – pyrolysis gas. The yield of acetic acid for the biomass of coniferous trees is from 2.5 to 3%, for deciduous trees – from 4 to 7%, and the yield of methanol – from 0.7 to 0.9, and from 1 to 2% by weight of absolutely dry wood.

The main components of plant biomass decompose in the following temperature ranges: hemicellulose (the least heat-resistant element) – temperature range from 200 to 300 °C; cellulose – temperature range from 260 to 400°C; lignin – temperature range from 200 to 540°C. The schematic structure of plant biomass is presented in fig. 11.2.

Cellulose (chemical formula $C_6H_{10}O_5$) is an unbranched polymer of sugar glucose, which is the main component of plant cell walls, the thermal decomposition of which is the most studied among all components of biomass. The reactions that occur during biomass decomposition describe the Waterloo mechanism (fig. 11.3). Thanks to the Waterloo mechanism, the dependence of the product yield on the type of chemical reaction, process temperature, and heating rate was established.

At lower temperatures (up to 350°C), cellulose is decomposed by dehydration to form a coal residue, water and gas, and at higher temperatures, depolymerization (temperature from 300 to 450°C) and fragmentation (about 600°C) occur.

Hemicellulose (chemical formula – $C_4H_{5.9}O_{3.3}$) is also a component of plant cell walls and consists of branched polymers. The process of its pyrolysis is similar to the process of cellulose pyrolysis: at temperatures up to 280°C, hemicellulose is decomposed by dehydration and at high temperatures – by polymerization.

Lignin is an aromatic part of the plant that is not hydrolyzed. The molecular formula of lignin has the entry $C_9H_{10}O_2(OCH_3)_r$. It fills the space of the cell walls, being at the same time a binding component, so its thermal decomposition requires higher temperatures. Under conditions of isothermal heating of biomass, lignin decomposition begins as early as 250°C and proceeds until the pyrolysis process is completed, and the maximum decomposition rate is in the range from 350 to 450°C. The mechanism of lignin decomposition depends on the rate of heating of biomass, and, consequently, on the particle size and thermal conductivity. In fig. 11.4 the lignin decomposition scheme is shown.

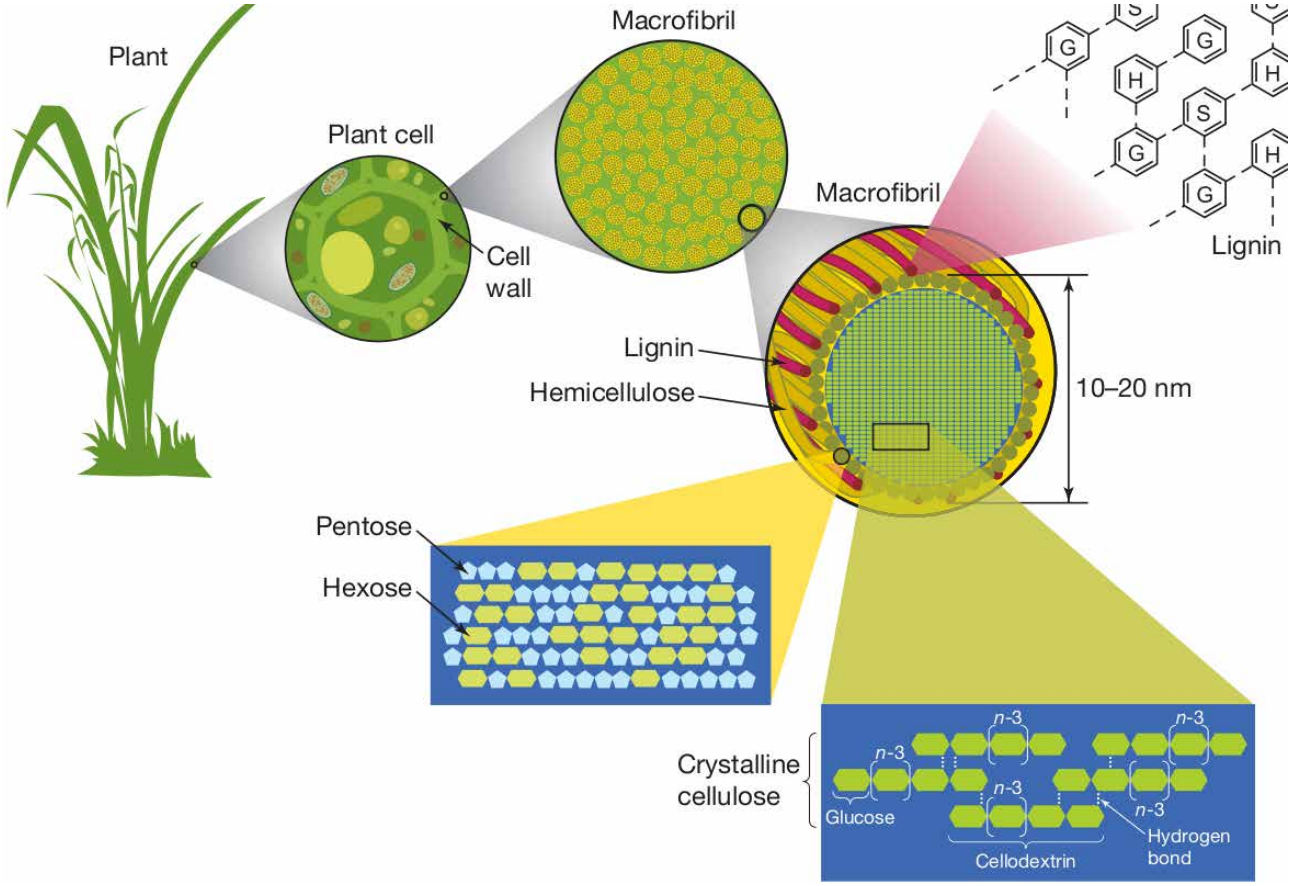


**Fig. 11.2. Schematic representation of the structure of plant biomass [source: Patil P. T., Armbruster U., Richter M., & Martin A. Heterogeneously Catalyzed Hydroprocessing of Organosolv Lignin in Sub- and Supercritical Solvents. *Energy & Fuels*, 2011, vol. 25, issue 10, p. 4713-4722. https://doi.org/10.1021/ef2009875]**

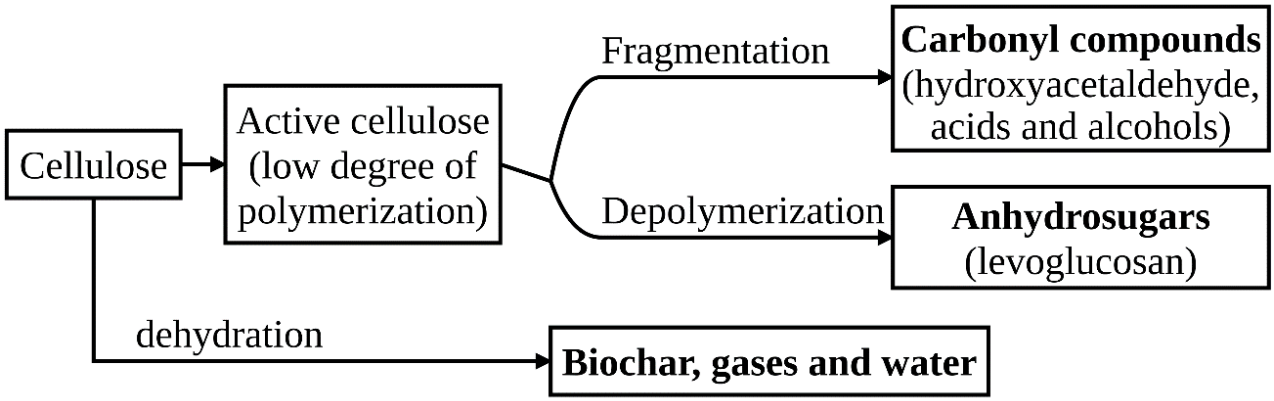


**Fig. 11.3. Schematic representation of Waterloo mechanism [source: Bridgwater A. V. The production of biofuels and renewable chemicals by fast pyrolysis of biomass. *International Journal of Global Energy Issues*, 2007, vol. 27, issue 2, p. 160-203. https://doi.org/10.1504/ijgei.2007.013654]**

The decomposition process of each of the components is accompanied by the release of certain gases from solid plant biomass. Sawdust at a heating rate of 5°C per minute begins to decompose at a temperature of 200°C. Gas release occurs in two

stages: $CO$ and $CO_2$ are released at lower temperatures; $H_2$ and $CH_4$ – at high process temperatures. The release of $CO$ and $CO_2$ is associated with the decomposition of cellulose and hemicellulose. The separation of $H_2$ and $CH_4$ that occurs at higher temperatures refers to secondary reactions of the cellulose pyrolysis process or to primary lignin decomposition reactions.

The structure of the main components of plant biomass is presented in fig. 11.5.

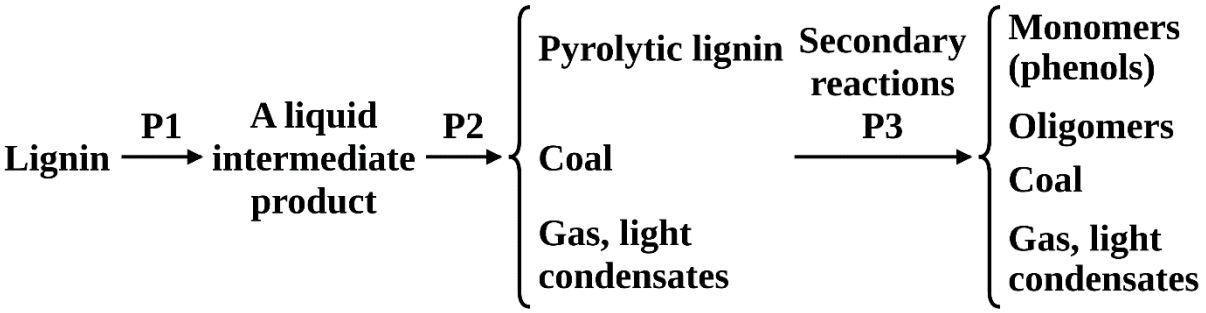


**Fig. 11.4. The scheme of lignin pyrolytic decomposition [source: Zhou S., Pecha B., van Kuppevelt M., McDonald A.G., & Garcia-Perez M. Slow and fast pyrolysis of Douglas-fir lignin: Importance of liquid-intermediate formation on the distribution of products. *Biomass and Bioenergy,* 2014, vol. 66, p. 398-409. https://doi.org/10.1016/j.biombioe.2014.03]**

The mineral part of biomass contains a small percentage of heavy metals, as well as magnesium, calcium, sodium, potassium, etc. Plant biomass is dominated by $SiO_2$ content, and wood biomass is dominated by $CaO$. The vast majority of inorganic compounds pass from the biomass-based feedstock to the carbon residue.

The study of pyrolysis kinetics and potential utilization analysis of cereal biomass showed the following results, and which are given in table 11.2. Ten grams of the arrived sample was used in each case to measure the lower heating value of feed in the bomb calorimeter. The sample was heated to 120 ºC for 6 h. The net loss in solid (wt%) on heating to 120ºC for 6 h provides the moisture content in the feedstock. Subsequently, the biomass was heated to 900 ºC in the furnace with a flow of air. The mass remaining in the solid was used to calculate the ash (wt%). While the fixed carbon was calculated by removing the ash content from the solid (wt%) remaining at 700ºC (at the end of the thermogravimetric analysis experiments). The remaining mass proportion was calculated as the volatile segment.

Thus, pyrolysis of agricultural plant biomass as a system has great potential for energy generation.

### 11.3. Technological schemes of pyrolysis of plant biomass

The main products of the pyrolysis process and their applications in the energy sector are presented in fig. 11.6. The simplest mechanism of pyrolysis is presented in fig. 11.7. According to the scheme, biomass decomposes into liquid, gaseous and solid products, which, when interacting with each other, lead to the creation of secondary decomposition products. The complex scheme of pyrolysis of wood biomass is

presented in fig. 11.8, which contains an approximate material balance of production of the main pyrolysis products from one warehouse of wood biomass.

**Table 11.2. Ultimate analysis of feedstocks, biochar, and pyrogas**

| Indicator | Units of measurement | Wheat Straw | Rice Straw | Maize Cobs | Rye Straw | Sorghum Straw |
|---|---|---|---|---|---|---|
| Ultimate analysis of feedstocks | | | | | | |
| LHV | MJ/kg | 13.96 | 12.65 | 17.34 | 14.92 | 17.6 |
| Moisture | % of wet weight | 12.90 | 7.93 | 13.1 | 13.5 | 7.72 |
| Ash | | 6.10 | 19.19 | 3.5 | 3.95 | 7.13 |
| Volatile Content | | 63.02 | 54.68 | 67 | 65.3 | 65.38 |
| Carbon | | 42.45 | 38.24 | 50.2 | 41.08 | 40 |
| Hydrogen | | 5.27 | 5.20 | 5.90 | 4.58 | 5.20 |
| Oxygen | | 32.76 | 28.57 | 43.5 | 36.49 | 40.7 |
| Nitrogen | | 0.52 | 0.87 | 0.42 | 0.4 | 1.4 |
| Ultimate Analysis of biochar | | | | | | |
| Carbon | % of wet weight | 65.7 | 42.34 | 66.75 | 65.9 | 58.79 |
| Hydrogen | | 4.44 | 2.23 | 3.64 | 4.75 | 4.21 |
| Oxygen | | 4.36 | 3.98 | 11.55 | 10.52 | 10.18 |
| Nitrogen | | 0.14 | 0.10 | 0.46 | 0.17 | 0.30 |
| LHV | MJ/kg | 15.76 | 11.84 | 15.27 | 17.14 | 13.10 |
| Production of electricity and heat energy from pyrogas | | | | | | |
| Electricity production | kW/kg feedstock | 1.10 | 0.89 | 1.55 | 1.22 | 1.52 |
| Heat Energy | | 1.72 | 1.39 | 2.42 | 1.91 | 2.39 |
| Total Carbon Capture | | 0.58 | 0.58 | 0.49 | 0.51 | 0.58 |

After the process of pyrolysis of wood biomass in retort at temperatures in the range from 400 to 500°C, a combined-cycle gas mixture and biochar are obtained as initial products. The combined-cycle gas mixture, after cooling in condenser 2, is divided into liquid condensate and non-condensed gases. For the accumulation of liquid condensate, the technological process scheme provides a sump 3. In the sump 3, the settled resin is separated from the liquid condensate, and the liquid condensate enters the distillation column 4, where it is divided into an alcohol fraction and acidic water. In evaporators 6, acidic water is separated from the soluble resin and enters the extractor 5 for further extraction of acetic acid from it. The amount and composition of products of thermal decomposition of wood biomass depends on the type of wood, the method of its heating, the duration and temperature of the process.

**Cellulose**

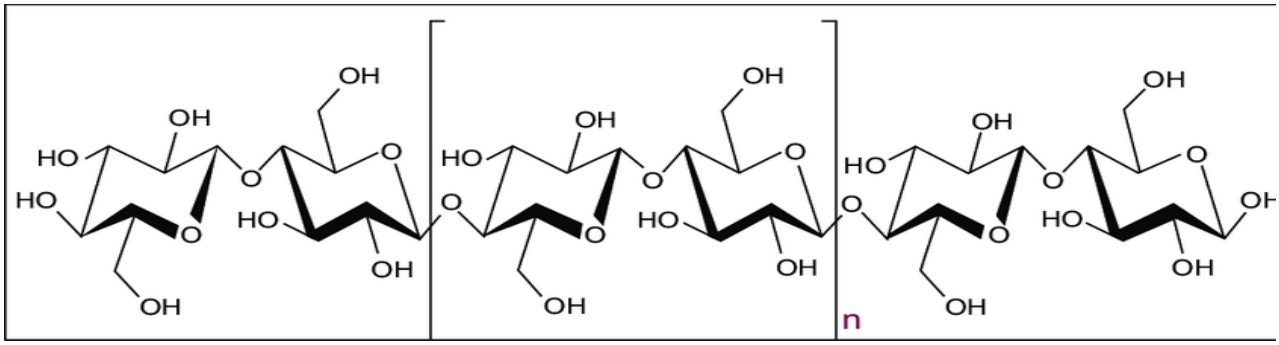

**Lignin**

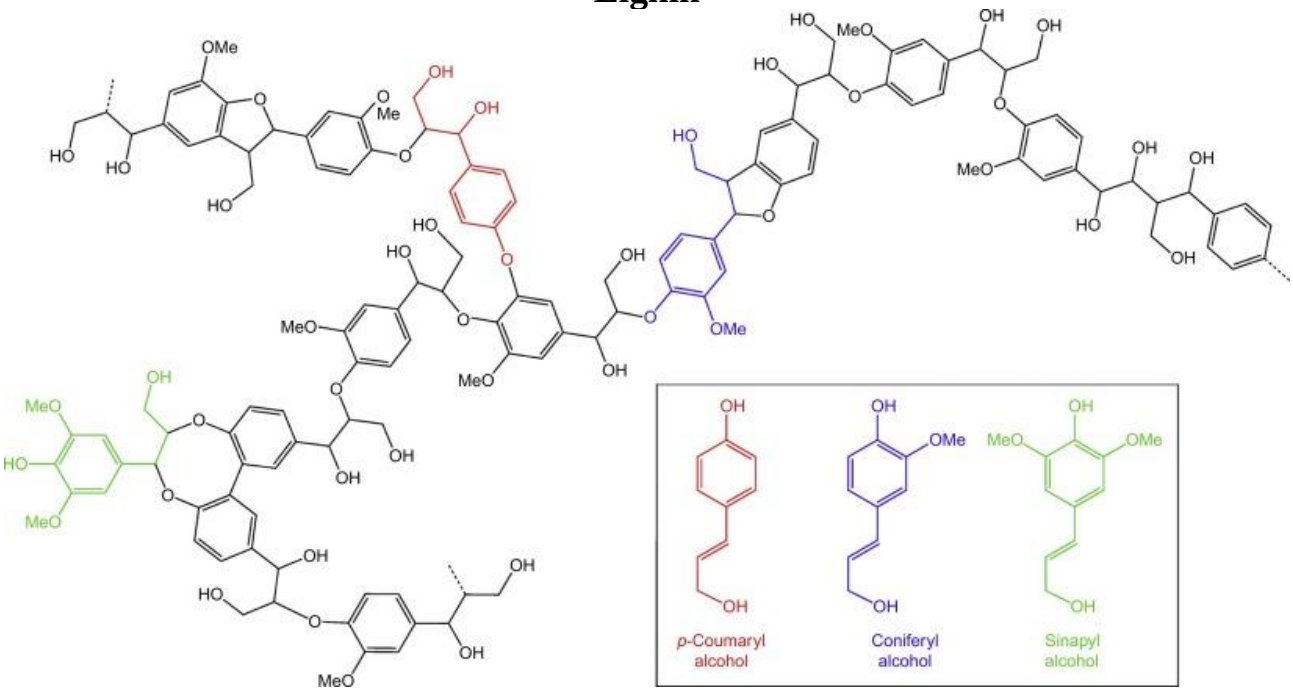


**Hemicellulose**

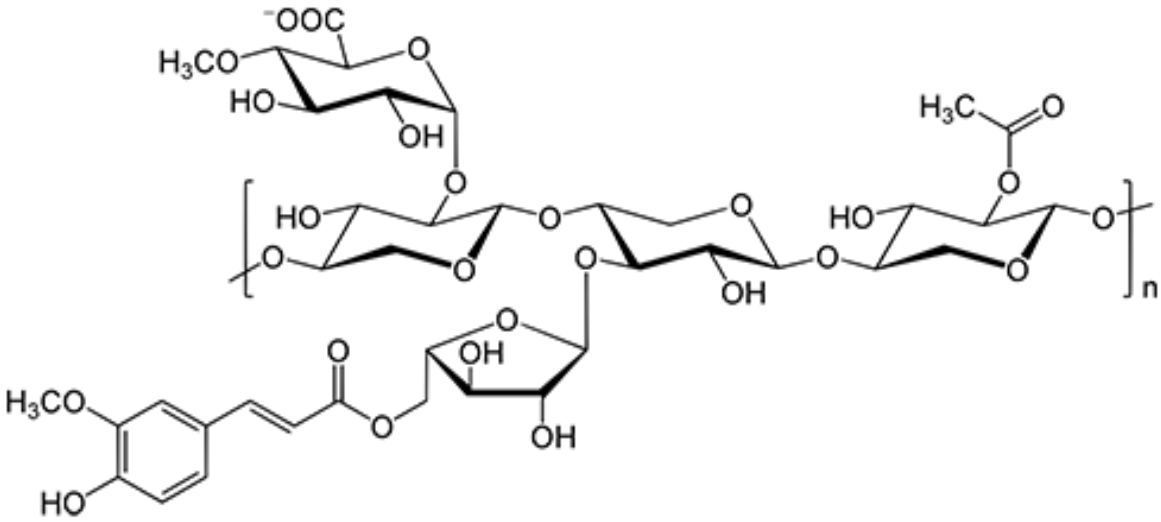

**Fig. 11.5. Structure of the lignocellulose matrix of plant biomass [source: Patil P. T., Armbruster U., Richter M., & Martin A. Heterogeneously Catalyzed Hydroprocessing of Organosolv Lignin in Sub- and Supercritical Solvents. *Energy & Fuels*, 2011, vol. 25, issue 10, p. 4713-4722. https://doi.org/10.1021/ef2009875]**

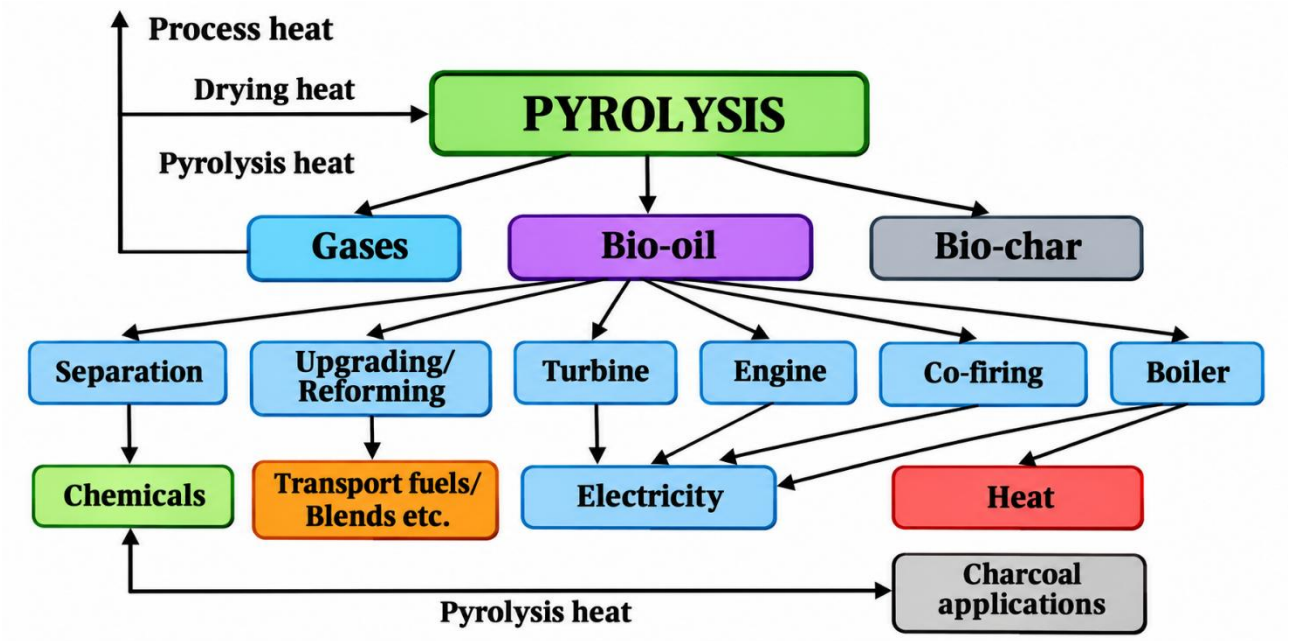


**Fig. 11.6. End products of the pyrolysis process and the technological processes in which they are used [source: Stocker M. Biofuels and Biomass-To-Liquid Fuels in the Biorefinery: Catalytic Conversion of Lignicellulosic Biomass using Porous Materials. – Angewandte Chemie. Int. Ed., 2008, vol. 47, issue 48, p. 9200-9211]**

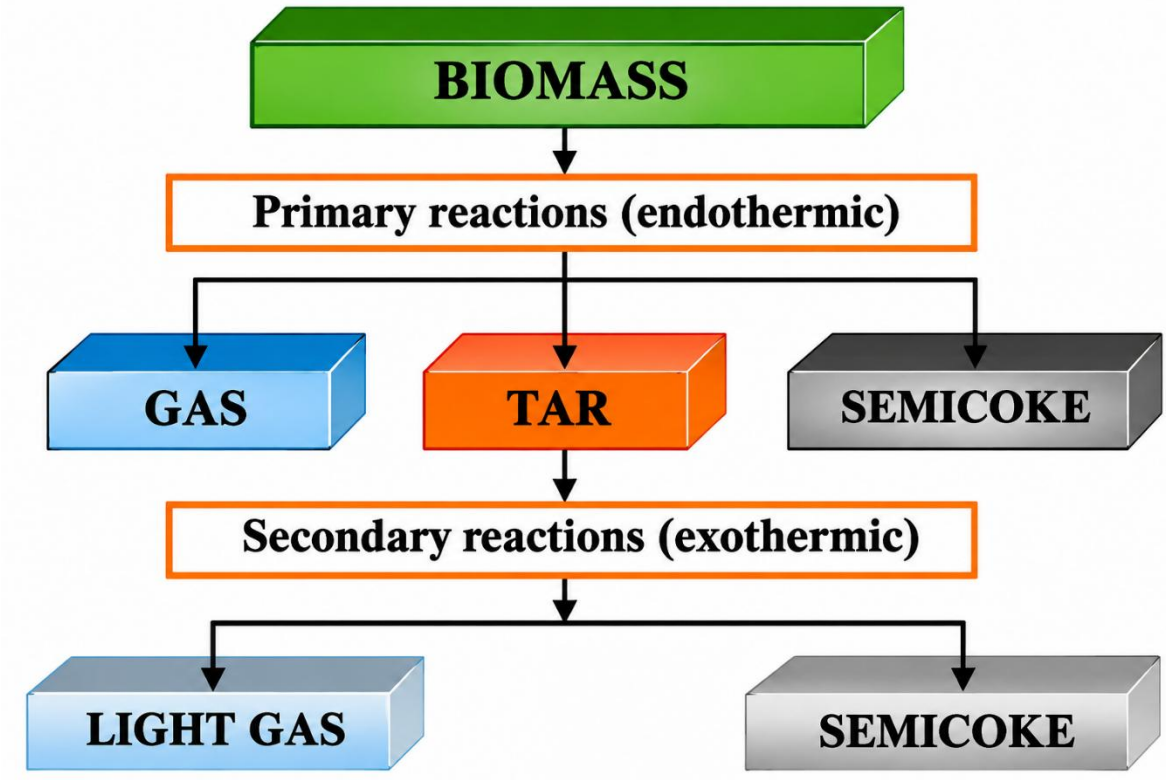


**Fig. 11.7. Broido-Shafizadeh biomass pyrolysis scheme [source: Stocker M. Biofuels and Biomass-To-Liquid Fuels in the Biorefinery: Catalytic Conversion of Lignicellulosic Biomass using Porous Materials. – Angewandte Chemie. Int. Ed., 2008, vol. 47, issue 48, p. 9200-9211]**

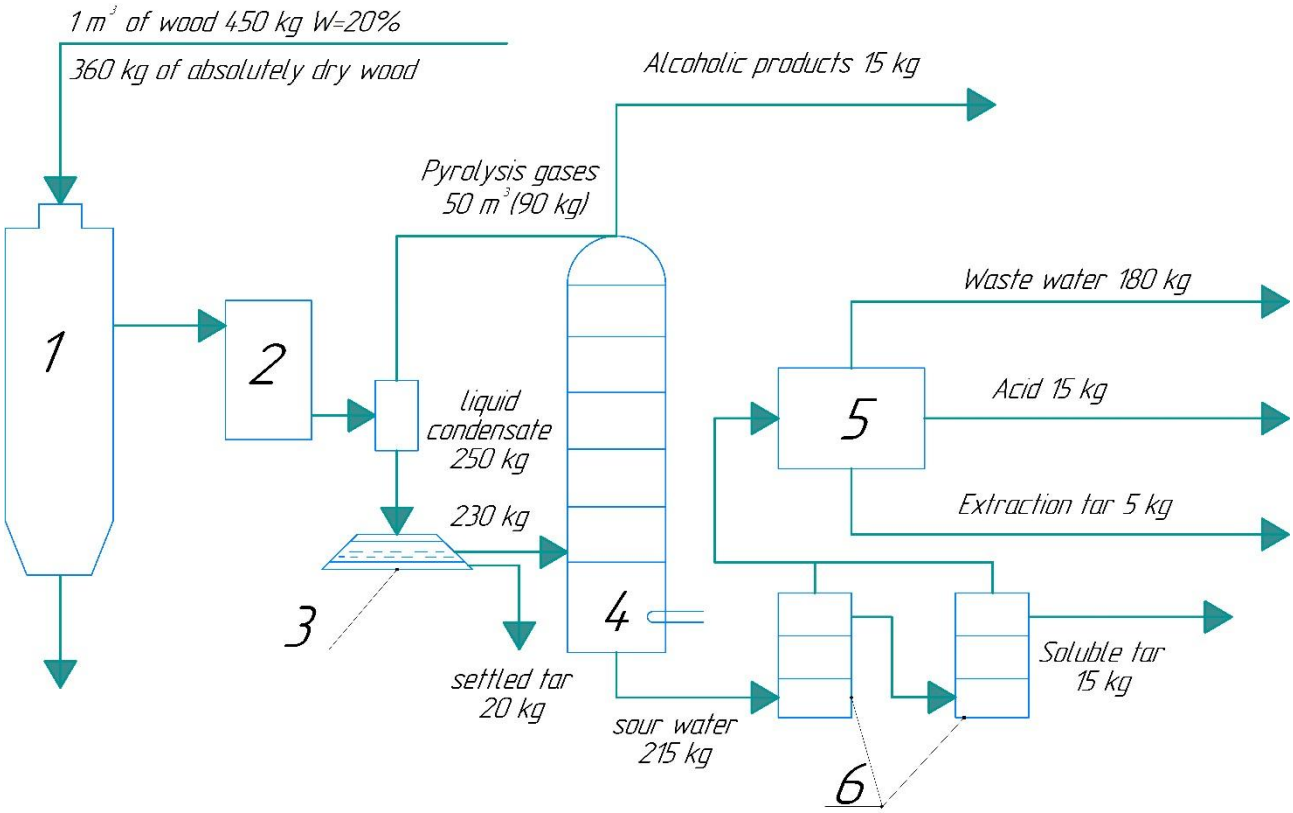


**1 – retort; 2 – condenser; 3 – sump; 4 – distillation column; 5 – extractor; 6 – evaporator**

**Fig. 11.8. Complex scheme of pyrolysis of wood biomass [source: Koverninsky I. N. Fundamentals of technology of chemical processing of wood M.: Timber industry, 1984. 184 p.]**

The process of pyrolysis of plant biomass consists of four stages:

– drying of raw materials at a temperature of 120 to 155°C due to an external heat source, which is accompanied by the removal of moisture from the raw material and changes in its structure, which has a significant impact on the further pyrolysis process; the beginning of the decomposition of biomass at temperatures from 155 to 280°C, which is accompanied by the decomposition of its less stable components. At this stage, which occurs under conditions of constant heat supply from the outside, *CO, $CO_2$, $CH_3COOH$* (acetic acid) and the like are formed;

– formation and evaporation of the main amount of biomass decomposition products at temperatures from 280 to 455°C, which is accompanied by intensive heat release and the formation of a significant amount of *$CO_2$, CO, $CH_4$*, complex hydrocarbons, carbonyl compounds, esters, acetic acid and its homologues, methanol. At the end of this stage, resins are released.

– the process of calcination of wood residues at temperatures from 455 to 560°C. This stage of pyrolysis of wood biomass also requires the supply of a significant amount of external heat. At this stage, heavy resin is released and removed, as well as *CO, $CO_2$, $H_2$*, hydrocarbons, and the pyrolysis process is completed. After the pyrolysis process is complete, all that remains is charcoal.

In practice, there is no clear separation between these four stages of the pyrolysis process. Wood decomposition products are removed from the retort in the form of a

complex combined vapor-gas mixture.

In the process of cooling the combined-cycle gas mixture in condensers, it is divided into non-condensed gases and liquid condensate. So, the final products of the pyrolysis process of wood biomass are biochar, liquid condensate (pyrolysis liquid) and pyrolysis gas. Pyrolysis liquid after settling is divided into two layers: the upper – water layer and the lower – settled resin. The amount of pyrolysis products produced varies depending on the size and humidity of wood biomass, the duration and temperature of the process.

## 11.4. Global experience in implementing plant biomass pyrolysis technologies

The use of a particular pyrolysis technology and the design of the device depends on the physical and chemical properties and fractional composition of solid plant biomass, that is, the degree of its grinding. For biomass with a particle size from 25 to 25 mm to 50 to 50 mm (can be wood chips or corn stalks), as a rule, retorts with a thick layer are used.

Due to the significant porosity of the layer based on such biomass, the gas carrier passes freely through its entire layer and heats it evenly. If sawdust or other type of fine-grained raw material is used as fuel biomass, the heat transfer by convection to the material from the heated wall significantly worsens. Such materials require the use of apparatuses that ensure high-quality mixing of their particles.

High-temperature devices of current action allow the most efficient processing of finely dispersed raw materials. These devices are high-performance, small-sized, work on all types of solid plant biomass with wide ranges of regulation of the degree of pyrolysis and temperature regime.

High process temperatures in apparatuses that implement the current pyrolysis method contribute to the intensification of chemical and thermal conversion of plant raw materials into pyrolysis gas with a low content of heavy hydrocarbon compounds. Such a gas does not require the use of complex devices to clean it before further use.

The disadvantage of these methods is the need to use heat-resistant materials and high specific energy consumption.

However, despite the above shortcomings of the described pyrolysis processes, scientific research is actively conducted all over the world in the direction of improving the efficiency of the pyrolysis process and creating a universal design of pyrolysis equipment that can work on various types of solid plant biomass with various physical and chemical properties.

In the USA, Great Britain, India, China, and Europe, the following pyrolysis technologies are rapidly developing: ablative pyrolysis; pyrolysis implemented in a reactor with two screws; pyrolysis implemented in 2 fluidized bed reactors; pyrolysis of biomass in a circulating fluidized bed; pyrolysis in a stream; pyrolysis in a fuel biomass layer.

Today, various pyrolysis technologies and, as a result, reactor designs of plant biomass pyrolysis plants are widely used. The most efficient and studied are pseudo-liquefied fluidized bed reactors, in which biomass particles are heated by mixing them

in a high-temperature stream with sand particles.

Dynamotive Energy Systems in Ontario (Canada) has successfully tested its own production of BioOil at the plant (fig. 11.9).

The plant, in energy equivalent, produces 130 thousand barrels of oil per year. A special feature of the process is the use of non-condensable pyrolytic gases as fuel for the pyrolysis plant of raw materials.

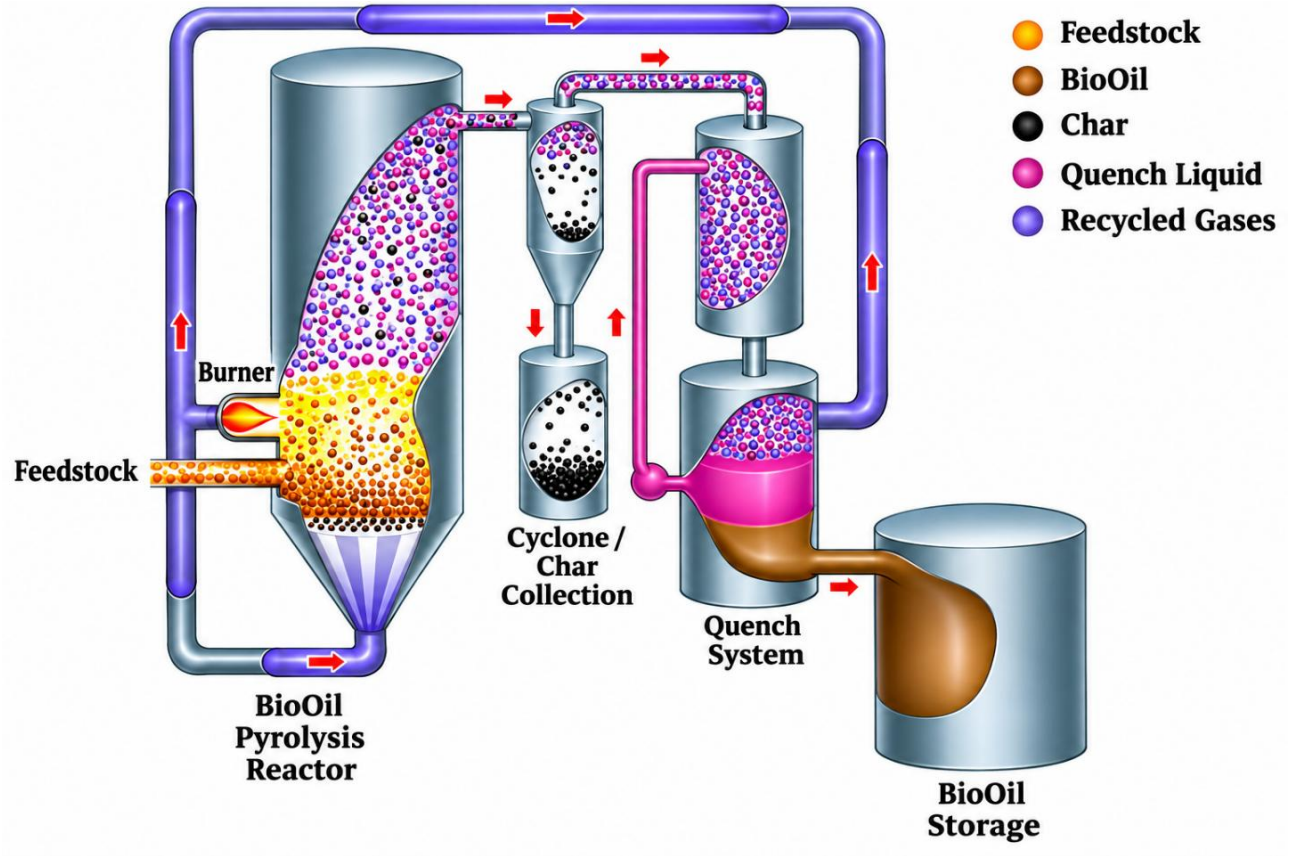


**Fig. 11.9. Diagram of the technological process of the Dynamotive Energy Systems Corporation plant [source: Brown R.C. Thermochemical Processing of Biomass: Conversion into Fuels. Chemicals and Power. – John Wiley & Sons, 2019, 408 p]**

This reduces fuel gas consumption by up to 75%. The technology makes it possible to obtain four types of products (as a percentage by weight): 60-75% of BioOil Plus; 10-20% of non-condensed gases; 15-20% of charcoal.

Another common technology is ablative pyrolysis, in which raw materials are heated during contact with the reactor walls. This technology allows processing large raw materials (up to 50×50 mm) and provides a high degree of processing of the resulting carbon residue. Thus, Twente, together with Nederlandse Organisatie voor Toegepast Natuur wetenschappelijk Onderzoek (TNO), developed a cyclone-type biomass fast pyrolysis ablation reactor PyRos (fig. 11.10 a).

A distinctive feature of the new reactor is the rotating filter located inside it (fig. 11.10 b), which is used for high-temperature purification of pyrolysis gas from solid inclusions.

Twins eTNO technology using the PyRos reactor makes it possible to produce

high-quality bio-oil from biomass with a humidity of up to 20% and is highly efficient and cost-effective.

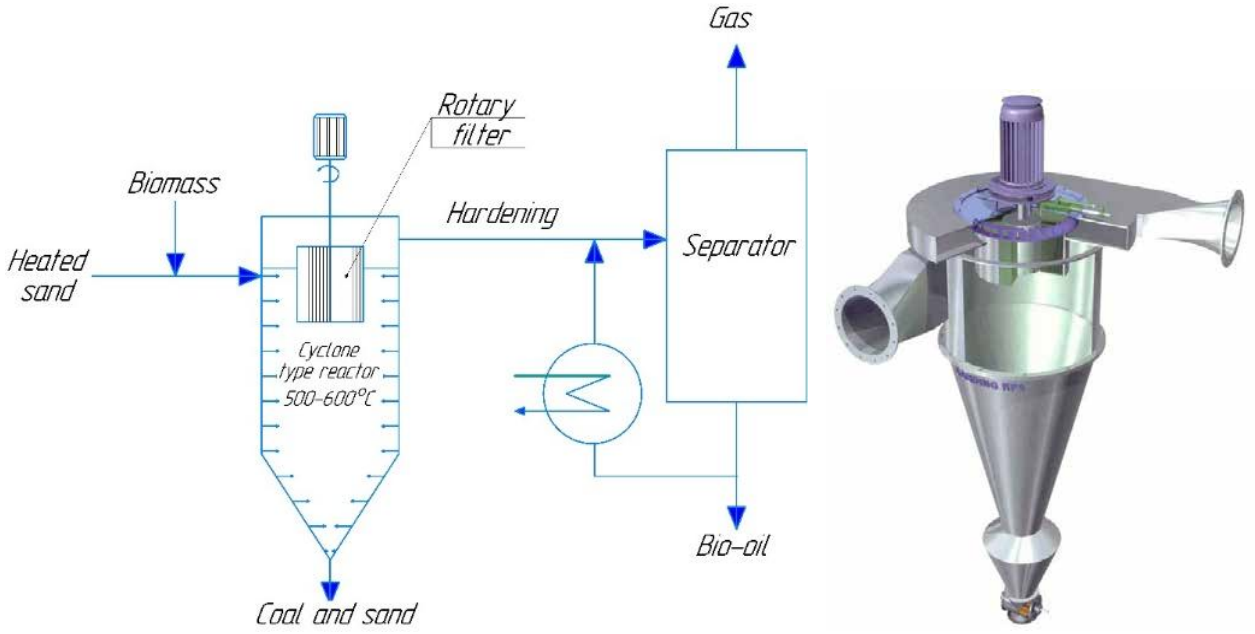


**a)** **b)**

***a* – schematic diagram of operation; *b* – rotating separation filter integrated in PyRos reactor cyclone**

**Fig. 11.10. Cyclonic ablation reactor for fast pyrolysis of biomass PyRos [source: Bramer E.A., Holthuis M.R., Brem G.A. Development of a cyclone reactor with internal particle filter for the flash pyrolysis of biomass. *Proceeding of the Second World Biomass Conference*, 2004, p. 963.]**

Biomass pyrolysis technologies are not yet widely used in Ukraine, but a number of projects should be noted. BESTON GROUP Co, LTD (China) implements "Engineering for Tomorrow's World" projects in Turkey, Spain, Ukraine. In Ukraine, BESTON plants (fig. 11.11) are used for carbonation of plant biomass with subsequent production of charcoal.

Raw materials for the production of biochar are wood shavings, grain straw and other plant biomass (rice and buckwheat husks, corn stalks and cobs, nutshells, etc.). In addition to charcoal, it is possible to produce tar, wood vinegar, and combustible gas.

Scientists from the National University of Life and Environmental Sciences of Ukraine, the Institute of Renewable Energy of the National Academy of Sciences of Ukraine, the Institute of Technical Thermophysics, Polissia National University, the National University "Lviv Polytechnic", the Gas Institute, etc. are working on creating samples of pyrolysis plants.

In particular, patents were developed and obtained for samples of plants for pyrolysis of plant biomass. A schematic representation of the general view of the plant biomass pyrolysis plant is presented in fig. 11.12.



**Fig. 11.11. BESTON industrial biomass pyrolysis plant (China) with a capacity from 4.5 to 5 tons/hour [source: BESTON. [Electronic resource]. – Available at: https://www.bestongroup.com/oil-sludge-pyrolysis-plant/]**

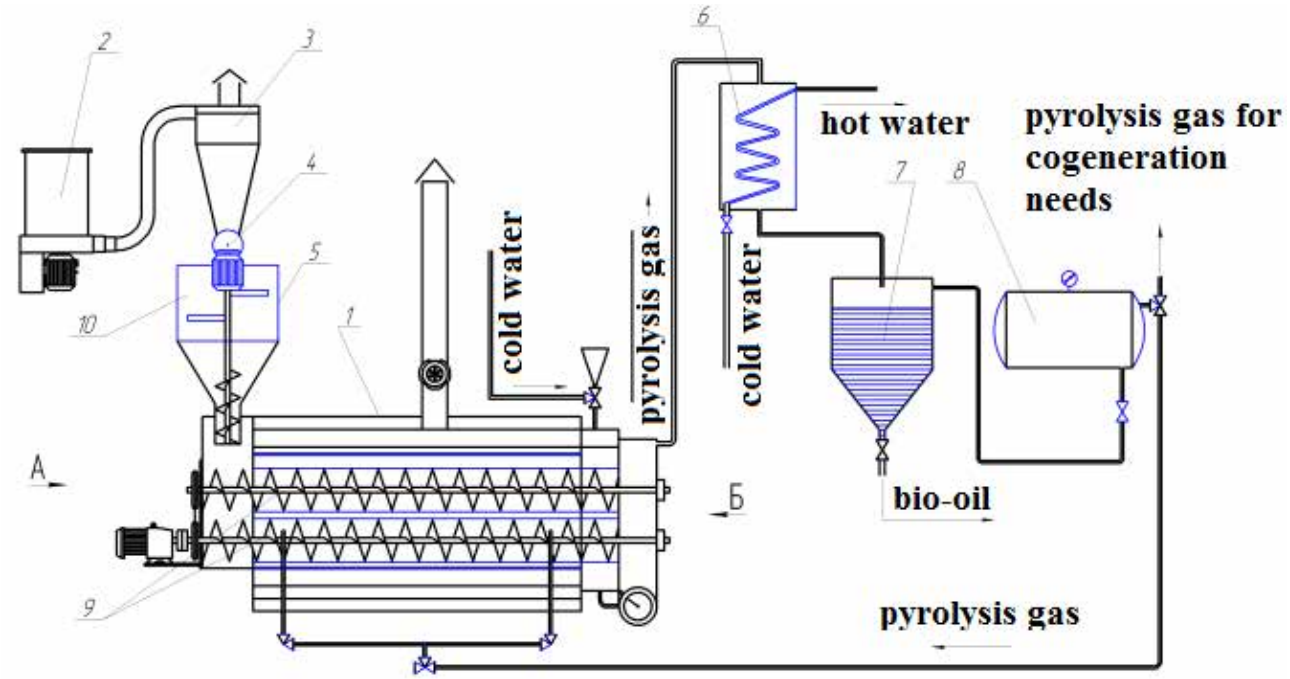


**1 – screw pyrolysis reactor with thermal chamber; 2 – biomass shredder; 3 – cyclone; 4 – sluice flap; 5 – loading device; 6 – heat exchanger for condensation of bio-oil; 7 – sump; 8 – tank for collecting pyrolysis gas; 9 – block of parallel installed screws; 10 – receiving hopper**

**Fig. 11.12. Plant biomass pyrolysis plant (Ukrainian patent for invention 105701)**

Plant biomass, previously crushed in the shredder 2, enters the cyclone 3. Then the raw material enters the loading device 5, in which the agitator 11 is mixed to a

homogeneous state.

The amount of vegetable raw materials entering the device 5 is regulated by a lock-type flap 4. The shut-off and discharge screw 12 is used to transport the prepared raw materials to the housing of the biomass pyrolysis reactor equipped with a thermal chamber 1. Raw materials are supplied directly to the parallel working bodies (screws) of the unit 9. The combustible gas produced in the process of high-temperature chemical and thermal conversion of biomass enters the heat exchanger 6. Part of the pyrolysis gas at low temperatures condenses into bio-oil, which accumulates in the sump 7. In turn, pyrolysis gas that did not condense accumulates in the tank 8. Biochar is used for the production of briquettes.

To do this, they are fed to the mixer 14 by means of an unloading screw equipped with a cooler 13. In the mixer, biochar is mixed with an adhesive solution. Briquettes are formed on a roller-type briquetter 15. Conveyor 16 is designed for cooling the produced briquettes.

Another plant is shown in fig. 11.13, the plant biomass previously crushed in the shredder 4 is sent to the cyclone 5. Then the raw material enters the loading device 7, in which the agitator 9 is mixed to a homogeneous state.

The amount of vegetable raw materials entering the device 7 is regulated by a lock-type flap 6. The shut-off and discharge screw 10 is used to transport the prepared raw materials to the housing of the biomass pyrolysis reactor 1, equipped with a thermal chamber 3. The loading screw 2 transports plant biomass to the screw 18, which has a spiral shape and is installed in the thermal chamber 3.

The combustible gas produced in the process of high-temperature chemical and thermal conversion of biomass enters the heat exchanger 15. Part of the pyrolysis gas at low temperatures condenses into bio-oil, which accumulates in the sump 16. In turn, pyrolysis gas that did not condense accumulates in the tank 17. Carbon-containing components that were not converted to bio-oil are later used for the production of briquettes. To do this, they are fed to the mixer 12 by means of an unloading screw equipped with a cooler 11. In the mixer, carbon-containing substances are mixed with an adhesive solution. Briquettes are formed on a roller-type briquetter 13. Conveyor 14 is designed for cooling the produced briquettes.

Biomass located on the heated surface rises with mixing plates 20 and falls on top of the untreated particles of raw materials. Further, the untreated biomass particles, moving behind the plates 20, fall into the cutouts on the turns 19 of the spiral-shaped screw 18. This technical technique ensures efficient mixing of plant biomass during its pyrolysis.

Increasing the contact area of biomass that is subject to pyrolytic decomposition in the installation with the heated surface and its effective mixing during pyrolysis (mixing plates 20 and cutouts on the turns 19 of the screw 18) provide an increase in the productivity of the installation as a whole.

A joint project of the National University of Life and Environmental Sciences of Ukraine and Polissia National University is the development of an experimental plant that combines the process of pyrolysis of plant biomass (straw pellets) with subsequent gasification of partially pyrolysis granular biomass in order to produce generator gas with a high hydrogen content (fig. 11.14).

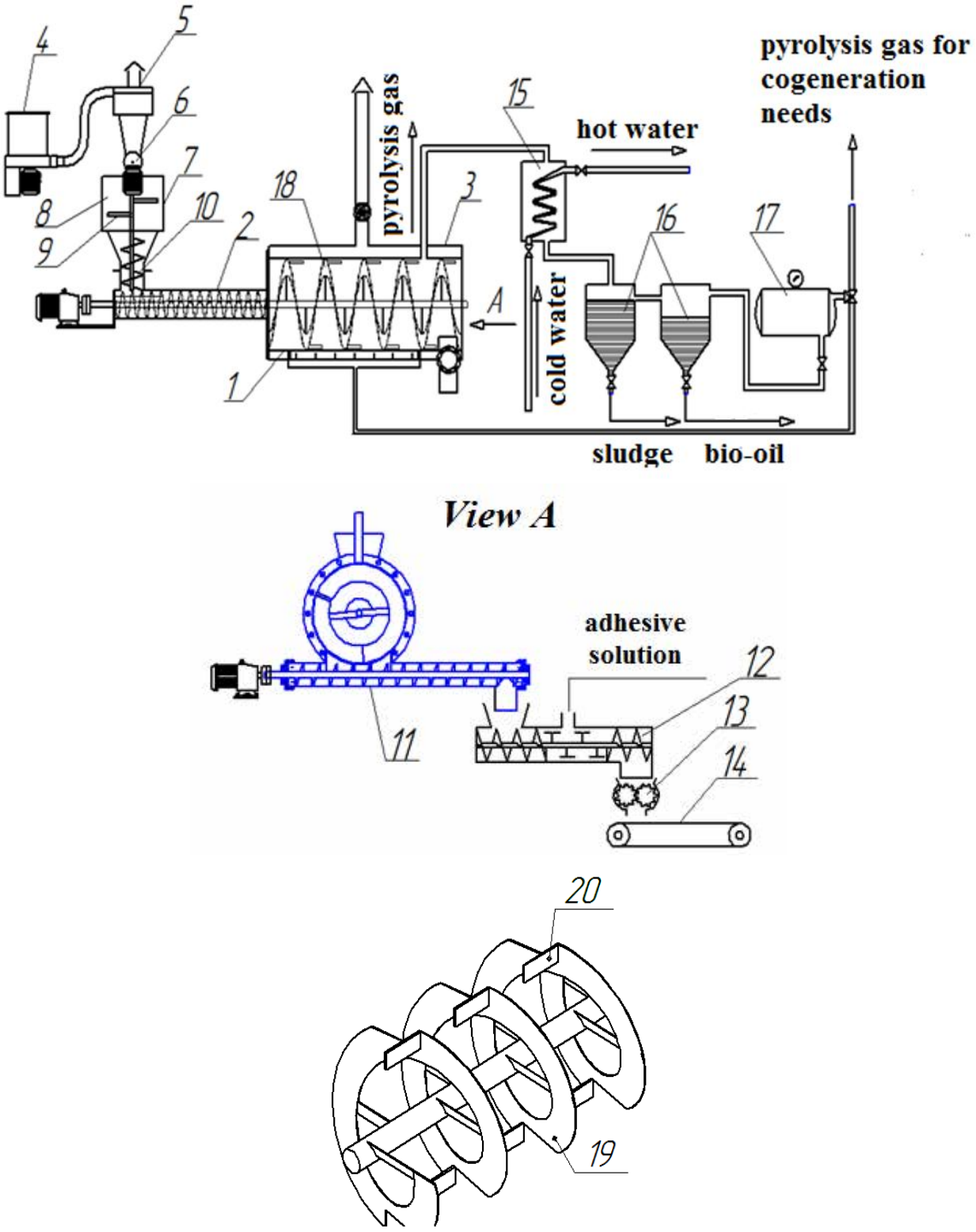


**1 – screw pyrolysis reactor; 2 – loading screw; 3 – thermal chamber; 4 – biomass shredder; 5 – cyclone; 6 – sluice flap; 7 – loading device; 8 – receiving hopper; 9 – agitator; 10 – shut-off and unloading screw; 11 – unloading screw with cooler; 12 – mixer; 13 – roller briquetter; 14 – conveyor for cooling briquettes; 15 – heat exchanger for condensation of bio-oil; 16 – settling tanks; 17 – container for collecting pyrolysis gas; 18 – spiral screw; 19 – turns of the spiral screw; 20 – mixing plates**

**Fig. 11.13. Plant biomass pyrolysis plant (Ukrainian patent for invention 111011)**

The main elements of the plant are vertically and sequentially installed: a fuel hopper with a dispenser; a fuel pyrolysis chamber, a fuel combustion chamber, a generator gas recovery chamber and an ash chamber.

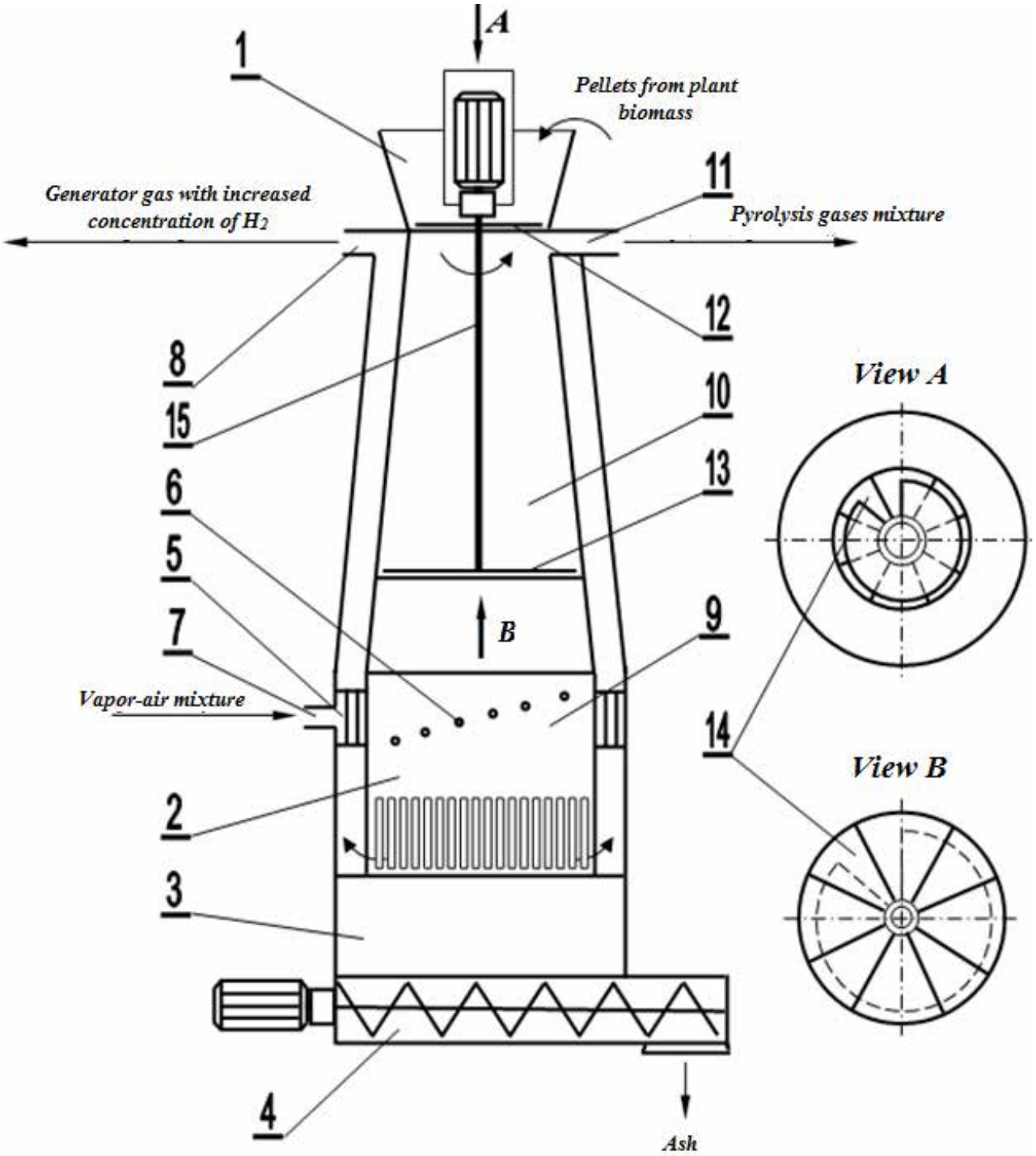


**1 – fuel hopper; 2 – generator gas recovery chamber; 3 – ash extraction chamber; 4 – discharge screw; 5 – discharge steam-air chamber; 6 – hole for steam-air mixture supply; 7 – steam-air mixture supply pipe; 8 – generator gas extraction pipe; 9 – fuel combustion chamber; 10 – fuel pyrolysis chamber; 11 – pyrolysis gas extraction pipe; 12 – upper disk dispenser; 13 – lower disk dispenser; 14 – hole metering; 15 – shaft**

**Fig. 11.14. Diagram of the plant for pyrolysis and gasification of plant biomass**

A general view of the plant for pyrolysis and gasification of plant biomass is given in fig. 11.15.



**Fig. 11.15. General view of the plant for pyrolysis and gasification of plant biomass**

Despite the fact that the processes of pyrolysis of plant biomass have not become

sufficiently widespread in the agricultural production of Ukraine, the prospects for their use, as foreign experience shows, are quite significant.

**Questions for self-assessment:**

1. Define the pyrolysis process of plant biomass.
2. Give a schematic record of the pyrolysis process of solid plant biomass.
3. Indicate, which of the chemical reactions of pyrolytic decomposition of the organic part of plant biomass are oxidative and which are reducing?
4. What groups is the process of pyrolysis of biomass divided into, depending on the rate of the main chemical reactions?
5. What groups is the process of pyrolysis of biomass divided into, depending on the temperature conditions of its implementation?
6. The production of which of the products (biochar, bio-oil or combustible gas) will prevail with different methods of organizing the pyrolysis process?
7. What types is pyrolysis process divided into, depending on the types of chemical reactions?
8. What are the main advantages and disadvantages of dry biomass pyrolysis technology?
9. What are the main advantages and disadvantages of the technology of oxidative pyrolysis of biomass?
10. Define the dry and oxidative methods of pyrolysis of plant biomass.
11. What is the difference between the allothermic process of chemical and thermal conversion of plant biomass and autothermal one?
12. What are the processes of pyrolysis of plant biomass using the method of ensuring the thermal regime?
13. What technological parameters are plant biomass pyrolysis technologies divided by?
14. What are the end products of the solid plant biomass pyrolysis process and what are their applications?
15. What are the main components of the equipment units included in the integrated pyrolysis scheme of wood biomass? What is their purpose?
16. What are the main stages of the pyrolysis process? Specify their temperature limits.
17. What are the main components of plant biomass in agricultural production?
18. What is the essence of the Waterloo mechanism?
19. Give a diagram of the pyrolytic decomposition of such a component of plant biomass as lignin?
20. Give a list of the main equipment of biomass pyrolysis plants in the pseudo-liquefied state.
21. What is the operating principle of a cyclone ablation reactor for rapid pyrolysis of biomass, and what installations is it installed in?
22. What technologies of pyrolysis of plant biomass are implemented in Ukraine?
23. Tell about the principle of operation of the plant biomass pyrolysis plant (Ukrainian patent for invention 105701). What is the peculiarity of the invention?

**References:**


1. Anca-Couce A. Reaction mechanisms and multi-scale modelling of lignocellulosic biomass pyrolysis. *Progress in Energy and Combustion Science*. 2016. Vol. 53. P. 41–79.

2. Basu P. Biomass gasification, pyrolysis and torrefaction : practical design and theory. 2nd ed. London ; San Diego : Academic Press, 2013. 530 p.

3. Chakravarty K. H., Sadi M., Chakravarty H., Andersen J., Choudhury B., Howard T. J., Arabkoohsar A. Pyrolysis kinetics and potential utilization analysis of cereal biomass by-products; an experimental analysis for cleaner energy productions in India. *Chemosphere*. 2024. Vol. 353. Article 141420.

4. Chen W.-H., Lin B.-J., Lin Y.-Y., Chu Y.-S., Ubando A. T., Show P. L., Ong H. C., Chang J.-S., Ho S.-H., Culaba A. B., Pétrissans A., Pétrissans M. Progress in biomass torrefaction: principles, applications and challenges. *Progress in Energy and Combustion Science*. 2021. Vol. 82. Article 100887.

5. De Wild P., Reith H., Heeres E. Biomass pyrolysis for chemicals. *Biofuels*. 2011. Vol. 2, No. 2. P. 185–208.

6. Egorov R. I., Taburchinov R. I. The numerical study of allothermal gasification of the peat by the focused light flow. *Applied Thermal Engineering*. 2021. Vol. 195. Article 117253.

7. Energy from organic materials (biomass) : a volume in the Encyclopedia of sustainability science and technology, second edition / ed. M. Kaltschmitt. New York : Springer, 2019. 1445 p.

8. Fast pyrolysis of biomass : a handbook / A. Bridgwater, S. Czernik, J. Diebold, D. Meier, A. Oasmaa, G. Peacocke, J. Piskorz, D. Radlein. Newbury : CPL Press, 1999. 188 p.

9. Kukharets S. M., Jasinskas A., Golub G. A., Sukmaniuk O., Hutsol T., Mudryk K., Čėsna J., Glowacki S., Horetska I. The experimental study of the efficiency of the gasification process of the fast-growing willow biomass in a downdraft gasifier. *Energies*. 2023. Vol. 16, Iss. 2. Article 578.

10. Mohan D., Pittman C. U., Steele P. H. Pyrolysis of wood/biomass for bio-oil: a critical review. *Energy & Fuels*. 2006. Vol. 20, No. 3. P. 848–889.

11. Mosier N., Wyman C., Dale B., Elander R., Lee Y. Y., Holtzapple M., Ladisch M. Features of promising technologies for pretreatment of lignocellulosic biomass. *Bioresource Technology*. 2005. Vol. 96, No. 6. P. 673–686.

12. Sharifzadeh M., Sadeqzadeh M., Guo M., Borhani T. N., Murthy Konda N. V. S., Garcia M. C., Wang L., Hallett J., Shah N. The multi-scale challenges of biomass fast pyrolysis and bio-oil upgrading: review of the state of art and future research directions. *Progress in Energy and Combustion Science*. 2019. Vol. 71. P. 1–80.

13. Yang L., Liu F., Liu Y., Quan W., He J. Deep regeneration of activated carbon catalyst and autothermal analysis for chemical looping methane thermo-catalytic decomposition process. *International Journal of Hydrogen Energy*. 2018. Vol. 43, Iss. 37. P. 17633–17642.

14. Zhelezna T. A., Geletukha G. G., Drozdova O. I. Research of technologies of ablative pyrolysis of biomass. *Industrial Heat Engineering*. 2011. Vol. 33, No. 3. P. 51–57.

# 12. USE OF LOW-TEMPERATURE THERMAL ENERGY SOURCES

**Lecture Plan:**


**12.1. Energy potential of low-temperature energy sources 290**
**12.2. Classification of heat pumps and their operating principle 299**
**12.3. Heating systems based on heat pumps 306**
**12.4. Non-standard solutions for storing low-temperature energy 314**
**12.5. Efficiency of using heat pumps in heat supply systems 318**


## 12.1. Energy potential of low-temperature energy sources

For the first time, the outstanding British physicist and engineer William Thomson pointed out the possibility of using low-temperature energy sources in order to obtain energy of higher potential back in 1852. As an energy converter, he proposed the concept of a heat pump. The concept was developed by the Austrian engineer Peter von Rittinger, who in 1855 designed and manufactured the first known prototype of a heat pump – a device for transferring heat energy from a low-temperature heat source to a high-temperature heat consumer.

The heat pump gained practical application much later, or rather in the 40s of the twentieth century, when the enthusiastic inventor Robert Weber (Robert C. Webber) experimented with the freezer. One day, Weber accidentally touched a hot condenser and realized that the heat was simply being thrown out. He thought about how to use this heat and decided to heat the water in the boiler. As a result, the family was provided with the necessary amount of hot water for domestic needs. At the same time, some of the heat got into the air. This gave him the idea to use heat to heat the house. Weber perfected his invention and began to run hot water through a heat exchanger, which he equipped with a fan. Thus, the heat spread throughout the house.

Subsequently, it was Robert Weber who proposed using the heat of the Earth, which is characterized by a constant temperature throughout the year.

For the operation of heat pumps, two heat sources are needed: **the lower one** – from which heat energy is taken; **the upper one** – from which energy is transferred to the consumer.

Quite significant, from the point of view of choosing the right heat pump is the type, qualitative characteristics and quantitative parameters of the lower heat source. The most important characteristics and parameters of the lower heat source include availability, corrosion characteristics, temperature dynamics, volume and dynamics of energy potential, investment and operating costs.

**Sources of low-temperature heat** (lower source) are divided into natural and man-made.

Natural sources include:

- water (surface, ground, geothermal);
- air;
- soil environment;
- solar radiation.

Man-made sources include:

– air ventilation and cooling systems;
– wastewater and water from aeration stations;
– water from supply systems of enterprises;
– heat of air and water removed in technological processes (secondary heat).

The temperature and energy levels of low-temperature sources are shown in table 12.1.

**Table 12.1. Temperature and energy levels of low-temperature energy sources**

| Heat source | Source temperature level, °C | Source energy level, MW |
|---|---|---|
| **Natural heat sources** | | |
| **Water:** | | |
| **surface** | 4–18 | 0.9–51.6 |
| **ground floor** | 6–15 | 1–2 |
| **geothermal** | 35–70 | 0.29–3 |
| **Air** | from –5 to +20 | 0.3–18.4 |
| **Soil environment** | 4–12 | 0.1–5.9 |
| **Solar radiation** | 0–75 | 0.1–150 |
| **Man-made heat sources** | | |
| **Water:** | | |
| **drain** | 10–17 | 0.3–90 |
| **service** | 15–30 | 2.4–10.6 |
| **technological** | 40–70 | 39.5–54.9 |
| **Air** | 0–50 | 0.3–22.1 |

Atmospheric air, as a source, is most often used to power small heat pumps. This is due to its availability. Among the disadvantages of this source is the fact that when the need for heat is high, the air temperature is very low (especially in winter) and there are significant temperature fluctuations throughout the year.

Energy contained in surface waters (rivers, lakes, reservoirs, seas) is released during heat exchange between water and atmospheric air, as well as soil. The disadvantages of surface water as a lower source are problems with obtaining energy in the cold season with a low current, as well as freezing of heat exchangers at a temperature of about 0 °C. Therefore, the most favorable periods for using this source are early autumn and spring.

Underground water located in deep wells is characterized by slight temperature fluctuations throughout the year, which ranges from 3 to 12°C. This water can be directed immediately to the evaporator or, if it is highly saline, through an intermediate heat exchanger. A particular issue is the use of geothermal water, which can sometimes be used as a lower source of heat pumps.

Soil can only be a lower source in small heat pumps, as it gives a small flow of heat. Installation of heat exchangers requires serious earthworks. In this regard, it is possible only use those territories that are free of buildings and perennial plantings.

The use of residual heat of technical processes (as a result of technological production in industry, energy, utilities, etc.) requires an individual solution of all aspects (type of substance, aggressiveness, suitability for heat exchange, etc.). This takes into account the power of the source and its temperature range (on a daily, weekly, and annual scale). The temperatures of man-made sources are usually higher than those of natural sources (with the exception of geothermal water).

Solar radiation has the highest temperature and energy levels of heat sources, and ground water has the lowest. The temperature and energy level of water and air of man-made heat sources is higher than natural sources, which is due to the imperfection of technological processes and technical systems, and, as a result, losses of thermal energy to the environment, but the scale of use of natural low-temperature energy sources is much larger. Based on the results of the analysis of types of low-temperature energy sources and their characteristics, the feasibility of using heat pumps is revealed. In industry, the main ones are man-made sources of low-temperature heat. These are primarily industrial wastewater and municipal water (fig. 12.1).

In Ukraine, the total annual volume of municipal wastewater is about 3,740 million $m^3$. The wastewater temperature ranges from 12 to 20°C, depending on the season. Sewage systems for centralized drainage of municipal wastewater operate in 427 cities, 515 urban-type settlements, and 856 villages. The specific volume of municipal wastewater ranges from 0.15 to 0.4 $m^3$ per inhabitant per day. This indicator largely depends on water availability and socio-economic conditions in individual regions.

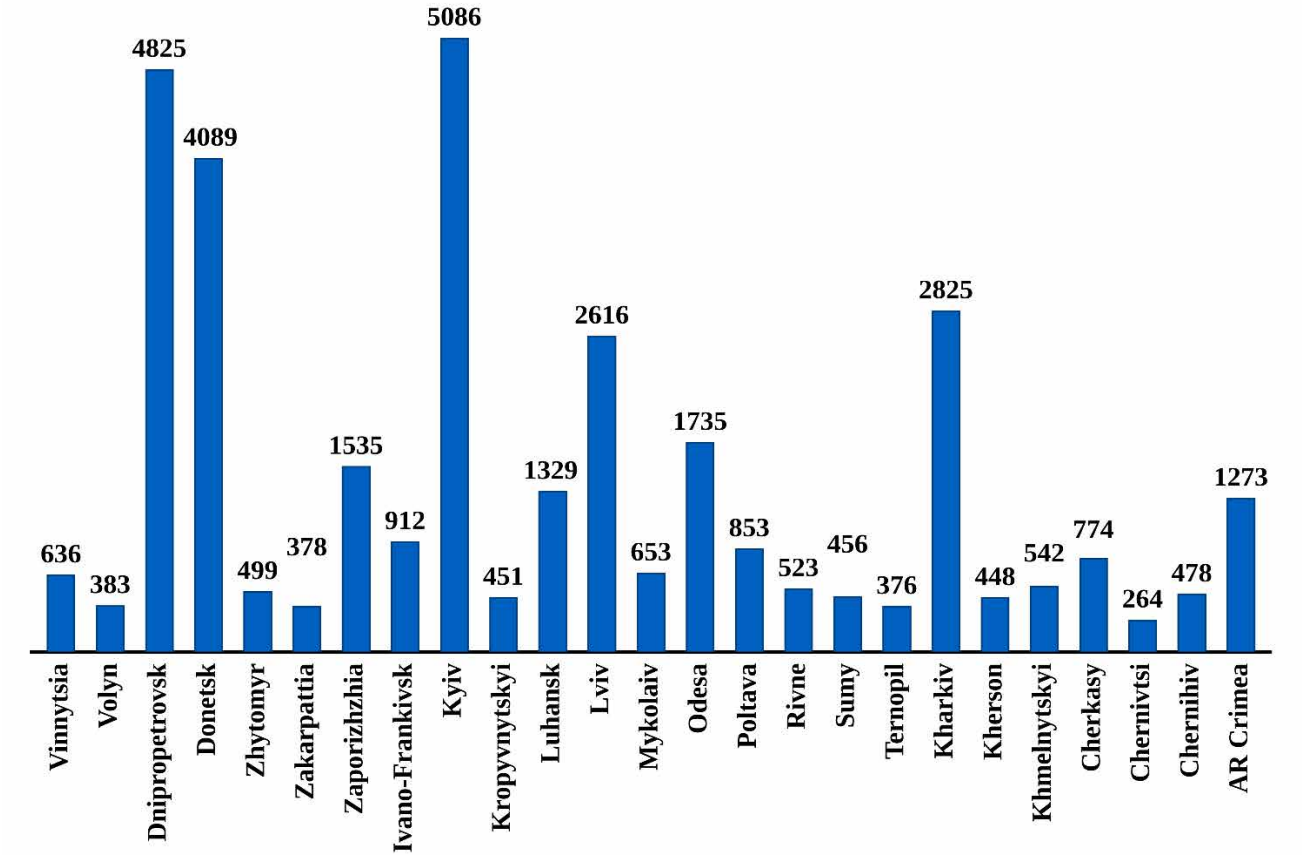


**Fig. 12.1. Energy potential of low-temperature thermal energy of wastewater in the context of regions of Ukraine (thousand MW h/year)**

Theoretical resources of low-temperature thermal energy of wastewater can be calculated based on the total volume of sewage in the relevant area, and resources for technical use can be calculated based on the total volume of treated sewage. The technical energy potential of low-temperature thermal energy of wastewater in Ukraine is 33,939 thousand MW h/year. Its highest values fall on the Kyiv, Dnipropetrovsk and Donetsk regions and range from 4,089 to 5,086 thousand MW h/year, and the smallest – in Chernivtsi, Ternopil, Transcarpathian and Volyn regions – from 264 to 383 thousand MW h/year.

In everyday life, the main sources are natural sources of low-temperature heat. These are water (surface and ground), air, soil environment, and solar radiation. Heat pumps in everyday life are used for heating houses, heating water for domestic needs and for air conditioning. As of today, there are 9.3 million private houses in Ukraine with a total area of 515.8 million $m^2$. For their heat supply, it is possible to arrange ground heat exchangers with a theoretical reserve of thermal energy of 525,855 thousand MW h per year. These theoretical resources of thermal energy of soil and ground water are determined on the basis of statistical data, they significantly exceed the energy needs for heating household residential buildings.

Thermal energy of the soil (fig. 12.2) and ground water can be used for heating and ventilation of premises. The extraction of heat energy from the soil can be carried out using ground heat exchangers of various types. The temperature of the heat carrier in the ground heat exchanger ranges from minus 5-7 to plus 10-12°C, which is quite enough to produce a heat carrier with a temperature of 40 to 70°C using heat pumps.

The experience of leading countries shows that soil energy is most often used in heat pump installations with a capacity of up to 70 to 100 kW, which serve individual small houses, mainly private residential buildings. In the conditions of Ukraine, these can be private houses in cities and villages.

The technical energy potential of low-temperature thermal energy of soil and ground water heat in Ukraine is 112,521 thousand MW h/year. Its highest values fall on the Dnipropetrovsk, Donetsk, Kyiv, Lviv and Kharkiv regions and range from 8,529 to 11,027 thousand MW h/year, and the smallest – on the Chernivtsi and Kherson regions from 1,535 to 1,855 thousand MW h/year.

Agriculture is one of the industries in which the heat pump can be widely used, and in many cases, there are particularly favorable conditions for the use of these devices.

In agricultural production, natural and man-made sources of low-temperature heat can be used in an equal ratio, since in Ukraine agriculture has large land and water resources, as well as its own secondary heat resources. The source of secondary heat resources, namely man-made low-temperature energy sources suitable for use in heat pumps, are:

- heated moist air that leaves the dryer;
- refrigerated agricultural products (milk, fruit);
- air-conditioned air that is removed from industrial and domestic premises;
- heat from stalls removed together with ventilated air;
- animal waste (manure);

– ventilated air that is removed from greenhouses.

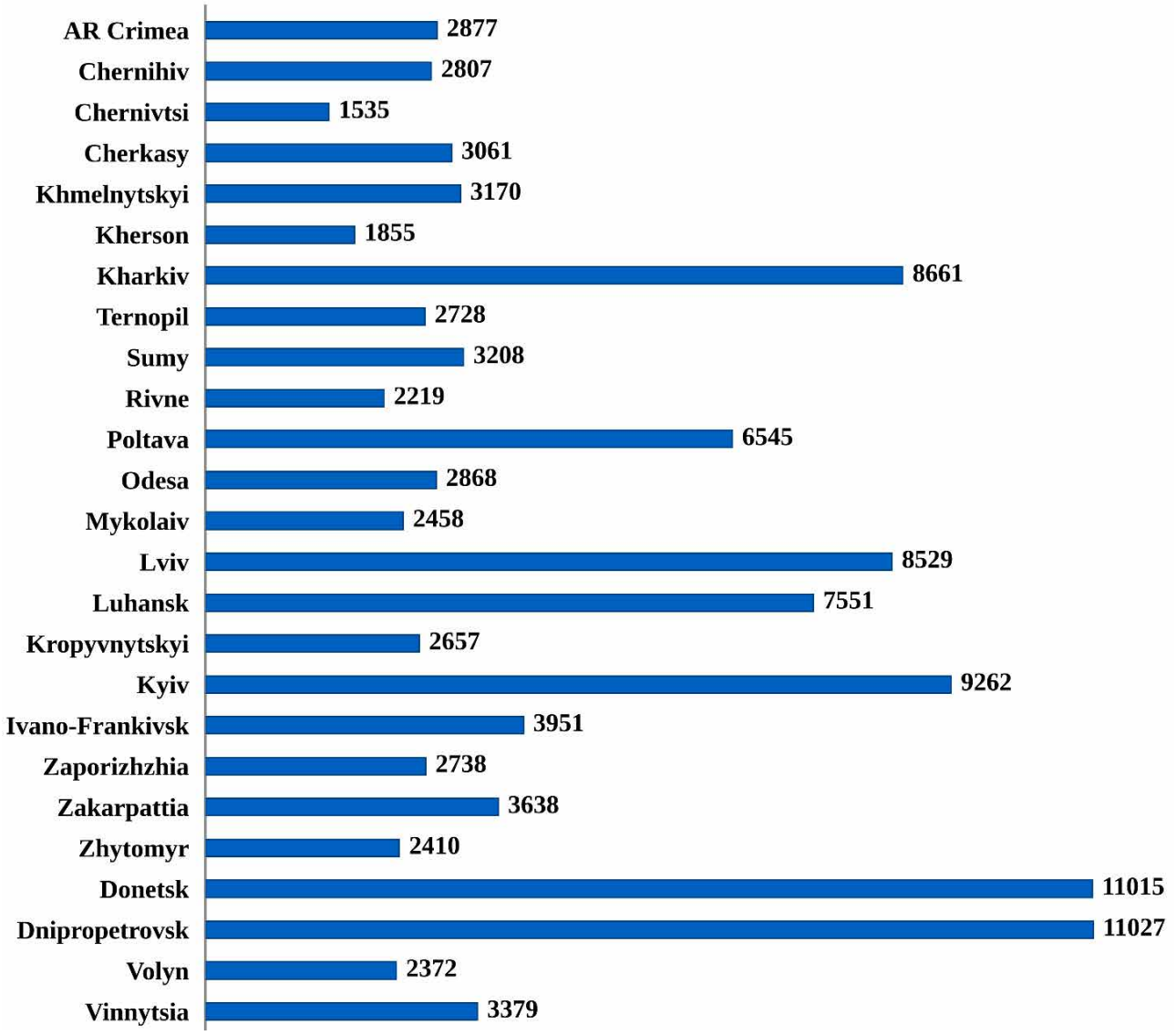


**Fig. 12.2. Energy potential of low-temperature heat of soil and ground water in the regions of Ukraine (thousand MW h/year)**

In the case of a heat pump, the resulting heat can be used for:

– heating of water for household needs;

– heating and removing moisture from the air in dryers;

– heating of ventilation air supplied from outside to the room;

– heating of greenhouses, greenhouse tunnels, residential and industrial premises.

In the agro-industrial complex of Ukraine, heat pumps are used in the field of animal husbandry, namely in such technological areas: in the lines of primary processing of milk immediately after milking, for its cooling and pasteurization; for heat supply to stalls; for the disposal of animal waste products. In the field of crop production, heat pumps are used in technological processes of processing and storing products of plant origin.

On dairy farms, the share of energy costs is more than 50% (direct electricity

costs for driving refrigerating compressors, heating water for sanitary and technological needs, and other needs). At the same time, fresh milk is a low-temperature source of thermal energy. So, when cooling 1 liter of milk from 36°C to 4-6°C, from 85 to 100 kJ of heat is removed. This heat is sufficient to heat 1 liter of water to a temperature of 25 to 35°C. Water with such temperature parameters is suitable for use in the technological processes of modern milking units.

The use of heat pumps in animal husbandry will allow obtaining energy from animal waste products, namely manure, in the process of its disposal. The implementation of this method consists in placing an air-saturated tank with manure under the floor of a non-bedding pigsty. Air saturation causes oxygen fermentation, along with which heat is released (for example, the temperature under the floor of a pet barn in winter does not fall below 25-27°C). This is enough to increase the temperature of the salt solution from 20 to 55°C, which is enough for the heating system.

Thus, the use of heat pumps in agricultural production will ensure simultaneous cooling of livestock raw materials and products, heating of water for sanitary and technological needs, air conditioning in stalls and heat supply of industrial, domestic and residential premises.

The widespread use of heat pumps in agro-industrial production has significant prospects, since, through the use of low-temperature thermal resources, it is possible to compensate for the energy deficit and contribute to the protection of the natural environment. On the scale of Ukraine, the use of various types of low-temperature energy sources and heat pumps as storage devices for this energy should take into account the geographical location of economic objects, natural resources and the direction of economic activity (table 12.2).

The introduction of heat pumping stations in Ukraine will make it possible to receive additional heat energy with an average total capacity of 909.48 MW and save up to 614.650 million $m^3$ of natural gas annually.

In Ukraine, it is planned to use natural low-temperature energy sources quite widely, in particular water, sea or river, the share of heat output from which ranges from 22 to 98% in the context of regions. Thus, the percentage of heat output from the use of water as a low-temperature energy source in Zhytomyr region is 98.2%, in Chernihiv region – 96.6%, in the Autonomous Republic of Crimea – 90.6%, in Zaporizhzhia region – 70.3%, in Vinnytsia, Mykolaiv, Poltava, Cherkasy, and Chernivtsi regions – 100%.

The second place is occupied by thermal energy, which can be obtained from man-made heat sources, namely sewage and industrial water. Its share in the context of regions of Ukraine ranges from 17.3 to 99.6%. In particular, in Kyiv region it is 99.6%, in Kropyvnytskyi region – 94.4%, in Rivne region – 86.5%, and in Kharkiv region – 87.5%.

It should be noted that the largest annual volumes of natural gas savings from the use of heat pump systems in the structure of the regions of Ukraine fall on Dnipropetrovsk region – 19.36%, Kyiv and Luhansk regions – about 15% each, the Autonomous Republic of Crimea – 11.19%, Vinnytsia region – 8.05%, Zhytomyr, Kherson, and Zaporizhzhia regions – 5% each.

**Table 12.2. Potential volumes of annual heat output and natural gas savings when using heat pumps**

| Region, district | Heat source | Power, MW | | | Fuel economy, thousand $m^3$/year | | |
|---|---|---|---|---|---|---|---|
| | | by sources | general | % | by sources | general | % |
| AR Crimea | sea water | 102.4 | 113 | 90.6 | 61,700 | 68,806 | 11.19 |
| | reservoir | 2 | | 1.7 | 1,300 | | |
| | thermal waters | 3 | | 2.6 | 2,100 | | |
| | air | 5.6 | | 5.1 | 3,706 | | |
| Kyiv region, Kyiv | air | 0.022 | 109.122 | 0.1 | 154 | 94,174 | 15.32 |
| | sewage waters | 108.7 | | 99.6 | 93,720 | | |
| | soil | 0.4 | | 0.3 | 300 | | |
| Vinnytsia | river | 71 | 71 | 100 | 49,500 | 49,500 | 8.05 |
| Dipro | air | 24.6 | 187.84 | 13.1 | 14,600 | 119,000 | 19.36 |
| | river | 99.44 | | 52.9 | 73,230 | | |
| | industry | 39.5 | | 21.5 | 18,300 | | |
| | sewage waters | 12 | | 6.3 | 8,400 | | |
| | soil | 12.3 | | 6.5 | 4,470 | | |
| Donetsk | sea water | 5.8 | 22.3 | 26.0 | 3,600 | 14,200 | 2.31 |
| | river | 2.5 | | 11.2 | 1,600 | | |
| | service waters | 14 | | 62.8 | 9,000 | | |
| Zhytomyr | river | 45.0 | 45.83 | 98.2 | 31,500 | 33,300 | 5.42 |
| | sewage waters | 0.5 | | 1.1 | 1,100 | | |
| | soil | 0.33 | | 0.7 | 700 | | |
| Transcarpathian | thermal waters | 1.01 | 2.23 | 45.3 | 428 | 1,282 | 0.21 |
| | air | 0.22 | | 9.8 | 154 | | |
| | sewage waters | 1 | | 44.9 | 700 | | |
| Zaporizhzhia | sea water | 41.6 | 59.1 | 70.3 | 28,950 | 35,440 | 5.77 |
| | air | 2.4 | | 4.2 | 2,390 | | |
| | river | 15.1 | | 25.5 | 4,100 | | |
| Ivano-Frankivsk | air | 0.3 | 0.4 | 75 | 24 | 94 | 0.02 |
| | soil | 0.1 | | 25 | 70 | | |
| Kropyvnytskyi | river | 1 | | 5.6 | 340 | 12,240 | 1.99 |
| | sewage waters | 17 | 18 | 94.4 | 11,900 | | |
| Luhansk | river | 34.06 | 149.26 | 22.8 | 25,960 | 96,500 | 15.70 |
| | industry | 59.4 | | 39.7 | 33,000 | | |
| | sewage waters | 25.3 | | 17.1 | 17,400 | | |
| | service waters | 30.5 | | 20.4 | 20,140 | | |

**Continuation of table 12.2**

| Region, district | Heat source | Power, MW | | | Fuel economy, thousand $m^3$/year | | |
|---|---|---|---|---|---|---|---|
| | | by sources | general | % | by sources | general | % |
| Mykolaiv | river | 20 | 20 | 100 | 15,000 | 15,000 | 2.44 |
| Odesa | sea water | 3 | 14 | 21.4 | 2,100 | 7702.1 | 1.25 |
| | reservoir | 3 | | 21.4 | 2.1 | | |
| | river | 1 | | 7.2 | 700 | | |
| | soil | 7 | | 50.0 | 4,900 | | |
| Poltava | river | 0.76 | 0.76 | 100 | 460 | 460 | 0.08 |
| Rivne | river | 2.5 | 20.8 | 12.0 | 1,402 | 16,012 | 2.61 |
| | sewage waters | 18 | | 86.5 | 14,400 | | |
| | soil | 0.3 | | 1.5 | 210 | | |
| Kharkiv | sewage waters | 3.5 | 4 | 87.5 | 1,700 | 1,860 | 0.30 |
| | soil | 0.5 | | 12.5 | 160 | | |
| Kherson | river | 30.52 | 50.92 | 59.9 | 20,070 | 35,670 | 5.80 |
| | sewage waters | 20.4 | | 40.1 | 15,600 | | |
| Khmelnitsky | soil | 2 | 2 | 100 | 1,400 | 1,400 | 0.23 |
| Cherkasy | river | 6 | 6 | 100 | 4,000 | 4,000 | 0.65 |
| Chernivtsi | river | 0.5 | 0.5 | 100 | 2 | 2 | 0.00032 |
| Chernihiv | air | 0.418 | 12.418 | 3.4 | 8 | 8,008 | 1.30 |
| | river | 12 | | 96.6 | 8,000 | | |
| **Total in Ukraine** | – | **909.48** | – | – | – | **614650.1** | **100** |

Currently, only individual installations operate in our country, and the creation and implementation of heat pumps is based mainly on the enthusiasm of performers, since the implementation of these systems is financially quite expensive. At the same time, it should be noted that the introduction of heat pumps in other countries of the world takes place with state support by providing subsidies to buyers of heat pumps, tax and credit benefits, subsidies to manufacturers of heat pump equipment, and a two-stage tariff for the purchase of electricity.

It should be noted that more than 800 thousand heat pumps are sold annually in Europe (fig. 12.3). Each country has its own market characteristics. While sales of heat pumps in France have experienced a real boom, the German market has declined slightly. The Scandinavian market has been stable for a long time. For example, about 95,000 heat pumps were sold in Sweden, as in the previous two years. It should be noted that only 9.5 million people live in Sweden. Less than 60 thousand pumps were

sold in Germany, with more than 80 million inhabitants. At the same time, the German market is defined as one of the most promising, especially given the new changes to the energy saving regulation (EnEV). So, when installing a heat pump in a new house, a subsidy is provided at the rate of 10 € per 1 $m^2$ of living space (but not more than 2000 €), which is 10% of investment costs. In case of reconstruction of the house – a subsidy of 30 € per 1 $m^2$ of living space (but not more than 3000 €), which is up to 15% of investment costs.

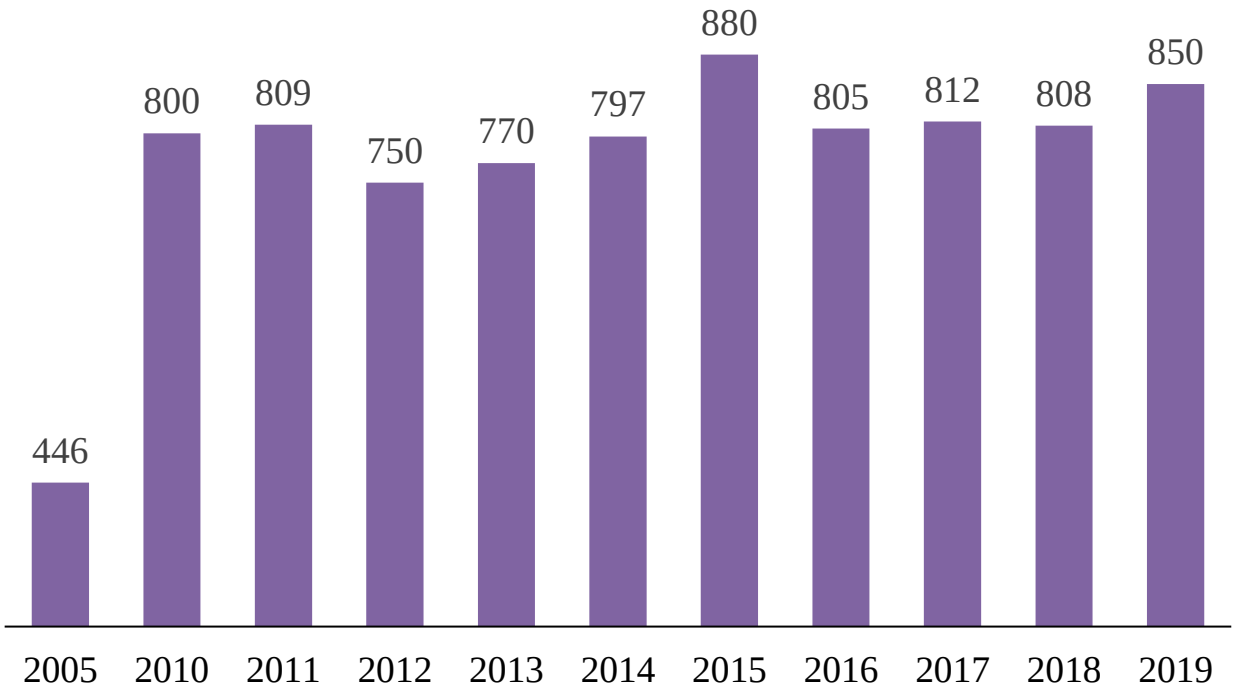


**Fig. 12.3. Dynamics of heat pump sales in the EU countries (thousand units)**

In Sweden, a subsidy of 30% of the cost of installing a heat pump (supply and installation) is provided, but not more than 3,300 €, provided that the heating system with a ground source consumes no more than 35% of the electricity consumed by the previous system.

In Austria, they pay attention to the need to use highly efficient heat pumps. The efficiency of heat pumps is estimated by the conversion coefficient (heat transformation coefficient, productivity, temperature conversion) of heat $E_t$, which shows the ratio of the received useful heat for heating the room to the total energy spent to drive the components and mechanisms of the heat pump. So, for new buildings, a subsidy of 2,200 € is provided if the seasonal conversion factor of the heat pump is more than 4.5 (4.3 with heated water) and a subsidy of 1,500 € – a seasonal conversion factor of more than 3.8 (3.6 with heated water). In buildings after reconstruction, the subsidy increases by 220 €, but in case of replacement of boilers that are at least 15 years old.

In France, they practice tax incentives at the level of 25-50% of the cost of heat pump equipment.

According to the latest data from the European Heat Pump Association (EHPA),

the heat pump market in the EU countries grew by 880,179 units in 2015. This contributes to a decrease of 24 million tons of $CO_2$ emissions and increased employment in this area. Geographically, a significant share of the growth can be attributed to increased sales in the Mediterranean countries – Spain (+15%), Italy (+20%) and France (+8%). These figures could have been even higher – according to the Heating & Cooling Strategy statistics expert, if the relevant government agencies had revised the directives on renewable energy sources.

The Ukrainian heat pump market has similar trends. But as of today, the volume of use of heat pumps in Ukraine is minimal. Only one industrial heat pump unit (HPU) with a thermal capacity of 1.5 MW (Kramatorsk), about 40 tons with a thermal capacity of 200 to 300 kW and about 900 tons with a capacity of up to 50 kW were introduced.

Rising costs and instability in the fossil fuel market should drive the pace of heat pump adoption. Of course, the key factors for the development of the Ukrainian market will be the improvement of the economic situation and the state program for stimulating renewable energy. Heat pumps, using low-potential renewable environmental energy, consume 3-4 times less energy than traditional heat supply, and the economically achievable potential for Ukraine is about 31.3 billion kWh/year, which is equivalent to replacing 4.2 billion $m^3$ of natural gas.

### 12.2. Classification of heat pumps and their operating principle

**A heat pump (HP)** is a universal device that provides three operations – heating, hot water supply and air conditioning.

The main difference between a heat pump and all other heat sources is the ability to use free renewable low-temperature environmental energy. About 75-80% of the power generated by the heat pump is actually "pumped out" of the environment, using the scattered energy of soil, water and air. And only 20-25% (fig. 12.4) of energy must be spent for the operation of the heat pump itself.

**The principle of operation of the heat pump** is as follows: a non-freezing liquid (a mixture of glycol or propylene glycol and water) that has received heat from a closed earth collector, well or ground water is sent to the heat pump, where heat is transferred to the internal circuit (through the evaporator) of the heat pump. Heat from the internal circuit of the fuel pump, with the refrigerant circulating in it, is transferred to the return circuit (through a condenser) of the house heating system and to obtain hot water. Then the cooled liquid is returned back to the low-temperature source, where it again takes heat from it.

**Internal heat exchanger** is designed to transfer heat to the interior of the building or to install warm water for domestic or industrial purposes; it is located in the house, or participates in the reception of heat from the building. The internal circuit of the heat pump consists of the following components: evaporator; compressor; condenser; expansion (throttle) valve; pipeline system and control automation.

**External heat exchanger** is designed to create the possibility of receiving heat from an environment located outside the building or from another available heat source, or to transfer heat to this environment.

**A heat pump** is a device that converts the dissipated heat energy of earth, water,

or air into relatively high-potential heat for a building's heating system.

Heat pumps are able not only to heat the room, but also to provide hot water supply, as well as to carry out air conditioning (if there is a reverse valve that allows the heat pump to work in reverse mode).

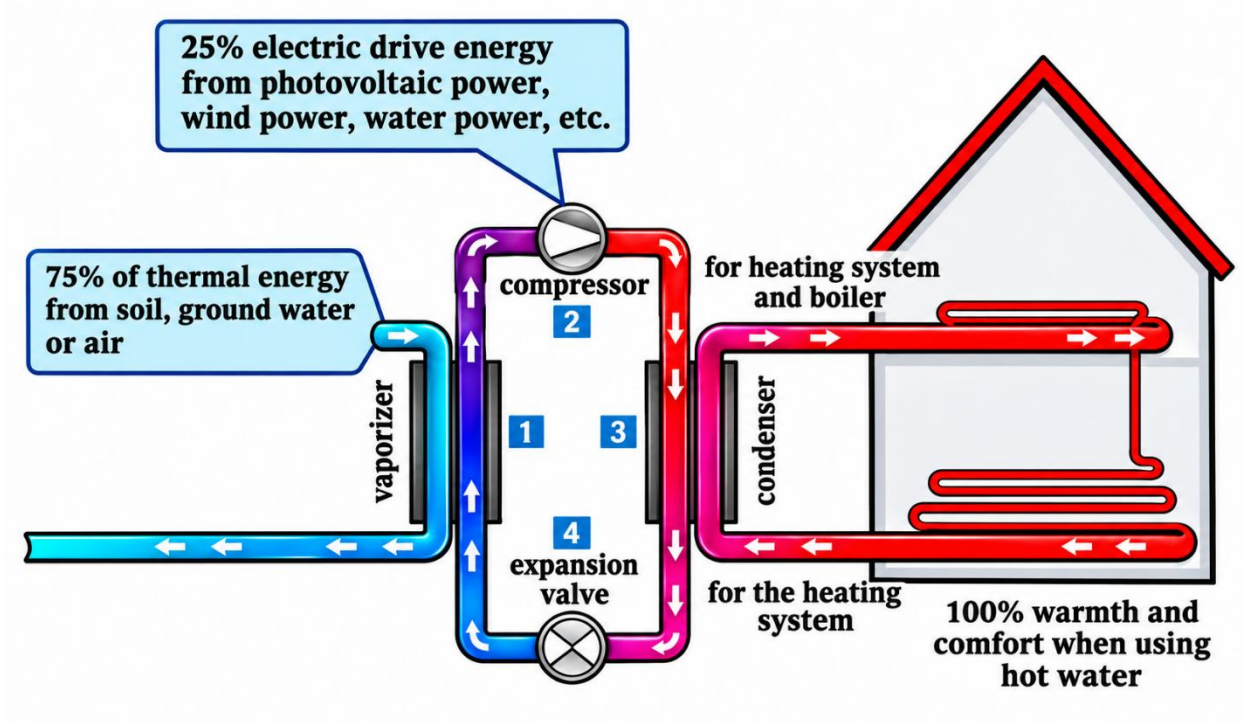


**Fig. 12.4. Schematic diagram of the heat pump operation**

Depending on the principle of operation, **heat pumps are divided into**: compressor, absorption, chemical and thermoelectric.

**Compressor heat pumps** always operate using mechanical energy, which is used to transport heat to a higher energy level.

**An absorption heat pump** uses a thermal form of energy (using electric heating or any fuel) to transport heat to a higher energy level.

**A chemical heat pump** uses a chemical form of energy to transport heat to a higher energy level.

**A thermoelectric heat pump** uses an electrical form of energy to transport heat to a higher energy level.

Today, compressor heat pumps and, to a slightly lesser extent, absorption pumps are most widely used.

Operating principle of **a compressor heat pump** (fig. 12.5) consists in the fact that the refrigerant (working substance) under high pressure passes through the throttle 4 to the evaporator 2, where, as a result of a sharp decrease in pressure (in accordance with the Joule-Thomson effect), its boiling process occurs (acquires a gaseous state) at a sufficiently low temperature.

In evaporator 2, the refrigerant takes heat from the ground or water circuit of a low-temperature source, increasing its temperature. From the evaporator 2, the refrigerant in the gaseous state enters the compressor 1, where it is compressed to high pressure. As a result, the refrigerant, according to the ideal gas law (Clapeyron

equation), increases its temperature to 85°C and above. At a high temperature, the refrigerant enters the condenser 3, where in the process of heat transfer to the heating circuit, it cools down and passes into a liquid state. At the same time, the temperature of the refrigerant decreases slightly, and the heating circuit increases. After passing through throttle 4, the process repeats. When the temperature in the house reaches the required level, the thermostat turns off the heat pump. As soon as the temperature in the heating circuit drops, the thermostat starts the heat pump again.

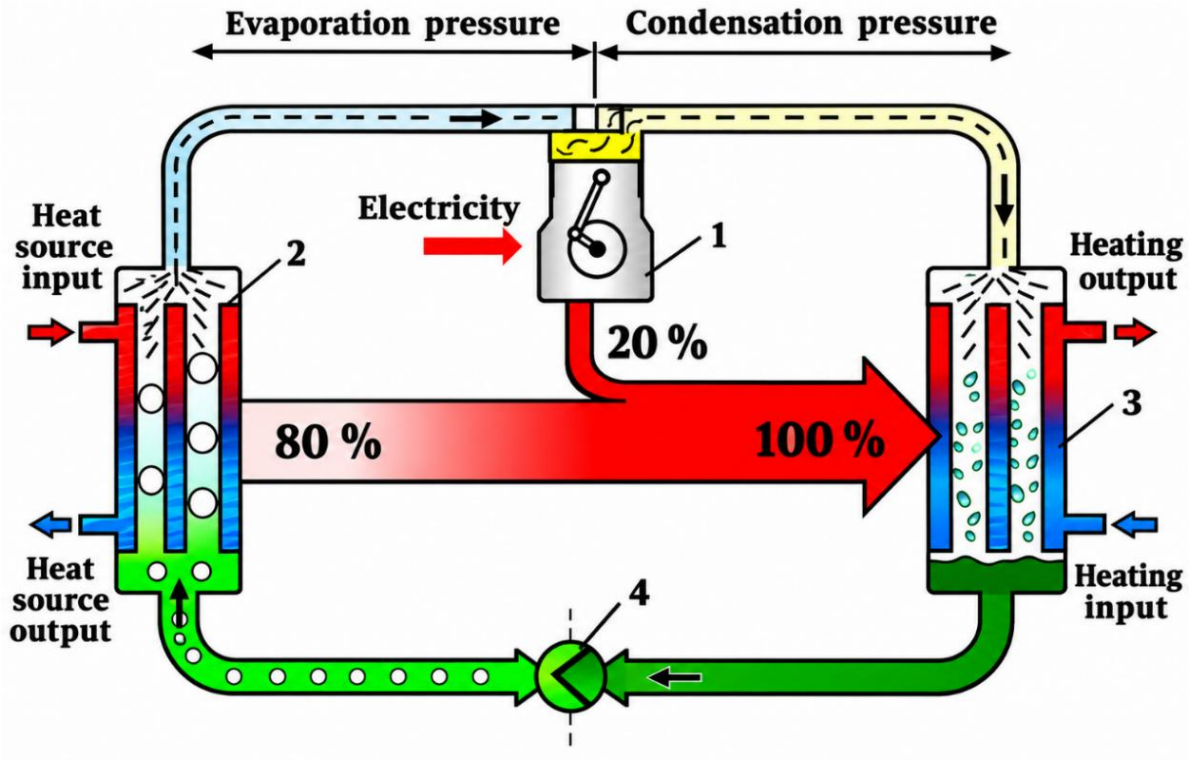


**a) operating principle**

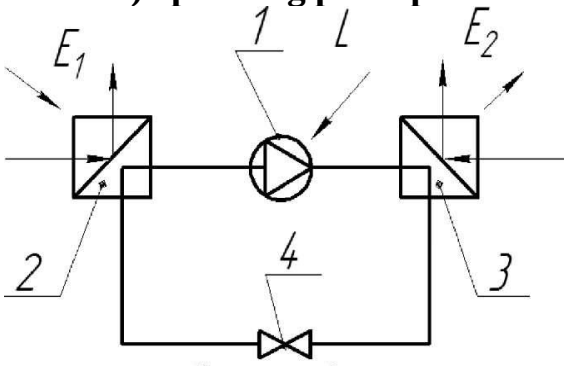


**b) operating scheme**

**1 – compressor; 2 – evaporator; 3 – condenser; 4 – throttle valve**

**Fig. 12.5. Compressor heat pump**

Thus, the principle of operation of the heat pump is based on the reverse Carnot cycle.

Freon, a substance with a low evaporation temperature, is most often used as a working substance (refrigerant) found in compressor heat pumps. Since freon has a detrimental effect on the ozone layer of our planet's atmosphere, it is now being replaced with substances such as ammonia, RC-318 and methylamines.

The efficiency of heat pumps is characterized by the performance coefficient (or conversion coefficient of the heat pump) $E_t$, which is defined as the ratio of the heat output received to the mechanical operation of the compressor consumed:

$$E_t = \frac{E_2}{L} = \frac{E_1 + L}{L}, \quad (12.1)$$

where: $E_t$ – conversion factor of the heat pump, rel. un.; $E_1$ – the energy obtained from a low-temperature source, J; $E_2$ – energy transferred to the heating system, J; $L$ – mechanical operation of the compressor, J.

Compressor heat pumps are characterized by high values of the specified coefficient $E_t$=2.5–6 (theoretically even higher – up to 8).

Principle of operation of **absorption heat pumps** (fig. 12.6) is based on the ability of liquids and salts to absorb working fluid vapors. The most common sources of working steam for absorption systems are:

- water (working fluid) and lithium bromide (absorbent);
- ammonia (working fluid) and water (absorbent).

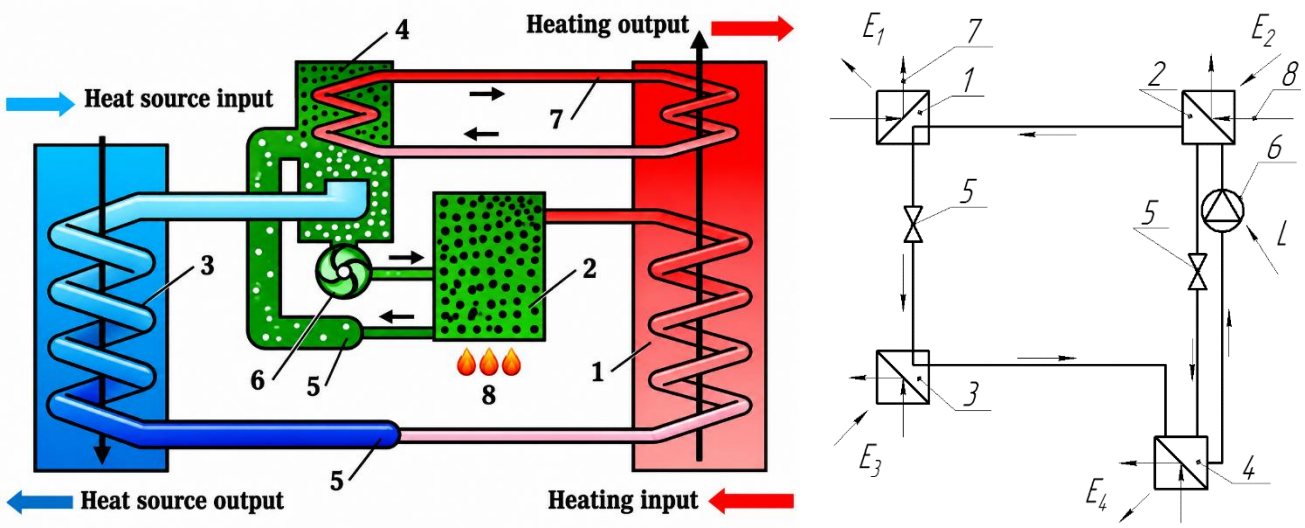


**a) operating principle** **b) operating scheme**

**1 – condenser; 2 – desorber (generator); 3 – evaporator; 4 – absorber (devourer); 5 – throttled valve; 6 – pump; 7 – heat transferred to the heating circuit; 8 – heat supplied from the outside**

**Fig. 12.6. Absorption heat pump**

In absorption heat pumps, compression of the working fluid is achieved by heating it under pressure in a system that includes an absorber 4, a pump 6, a generator 2 and a throttle valve 5. The absorbent absorbs low-pressure steam at the outlet of the evaporator 3. As a result of this process, heat is generated. The resulting solution (a mixture of working fluid and absorbent) is pumped under pressure using the pump 6 and enters the generator (desorber) 2, where it boils off at high temperature. The working fluid (steam) condenses in the condenser 1, while the absorbent returns to the absorber (devourer) 4 to its original state through the throttle valve 5.

Heat is "extracted" from a low-temperature heat source in the evaporator 3. The useful heat output is achieved by equalizing the temperatures in the condenser 1 and absorber 4. High-temperature heat (hot water, water vapor, flue gases, natural gas,

electric heating, etc.) enters the generator 2 to start the heat pump operation process. To operate a low-power pump 6, it is necessary to spend a small amount of electricity. In desorber 2, ammonia-saturated water is heated by heat supplied from outside 8 (secondary heat of technological processes, geothermal waters, solar collectors, and biogas). This leads to the formation of steam from ammonia (evaporates faster from water), which then condenses in the condenser 1, giving heat to the heating medium 7. Condensed ammonia flows through the throttle valve 5 to the evaporator 3, where, due to a sharp expansion, evaporating takes heat from a low-temperature source. From the evaporator 3, ammonia enters the absorber 4, saturating the depleted ammonia solution returned from the desorber 2. During saturation, as a result of a chemical reaction, absorption heat is released, which is removed to the heating medium 7.

The performance coefficients $E_t$ of absorption heat pumps are determined by the dependence:

$$E_t = \frac{E_1+E_4}{E_2+E_3+L}, \quad (12.2)$$

where: $E_1$, $E_4$ – energy transferred to the heating system, J; $E_2$ – heat energy supplied to the steamer, J; $E_3$ – energy obtained from a low-temperature energy source, J; $L$ – mechanical operation of the compressor, J.

Compared to compressor pumps, absorption heat pumps are characterized by a lower (2-3 times) value of the $E_t$ coefficient, which is 1.3–1.6. The advantage of absorption heat pumps over compressor pumps is noiselessness in operation.

**Thermoelectric heat pumps.** The principle of operation of thermoelectric heat pumps is based on the Peltier effect (1834). The essence of the effect is the release or absorption of heat (depending on the direction of the electric current) at the junction of two different materials (or semiconductors) under the action of a constant voltage.

Based on the Peltier effect, thermoelectric modules, the main element of thermoelectric heat pumps, are created (fig. 12.7). The principle of operation of a thermoelectric module is quite simple. It is an array of ***p***- and ***n***-type semiconductors connected in series by copper conductors (an array of semiconductor-metal junctions).

Let's consider the principle of operation of a thermoelectric module on the example of two ***p***- and ***n***-type semiconductors connected by copper contacts, i.e. an array of four metal-semiconductor junctions. Let's assume that the current is directed from an ***n***-type semiconductor to a ***p***-type semiconductor. Recall that the direction of the current is chosen as the direction opposite to the ordered movement of electrons in the metal, so, moving along the closed loop of the circuit, electrons will sequentially overcome four transitions: 1) copper- ***p***-type semiconductor; 2) ***p***-type semiconductor-copper; 3) copper-***n***-type semiconductor; 4) ***n***-type semiconductor-copper.

At the first junction, electrons fall from a copper conductor into a ***p***-type semiconductor, where the main charge carriers are holes. In a ***p***-type semiconductor, holes and electrons recombine near the junction, which is accompanied by the release of energy, since from an energy point of view, electrons move from a state with a higher energy (electrons have this energy in the conduction band) to a state with a lower energy (electrons have this energy in the valence band). Therefore, the region at the interface of the ***p***-type copper-semiconductor transition heats up.

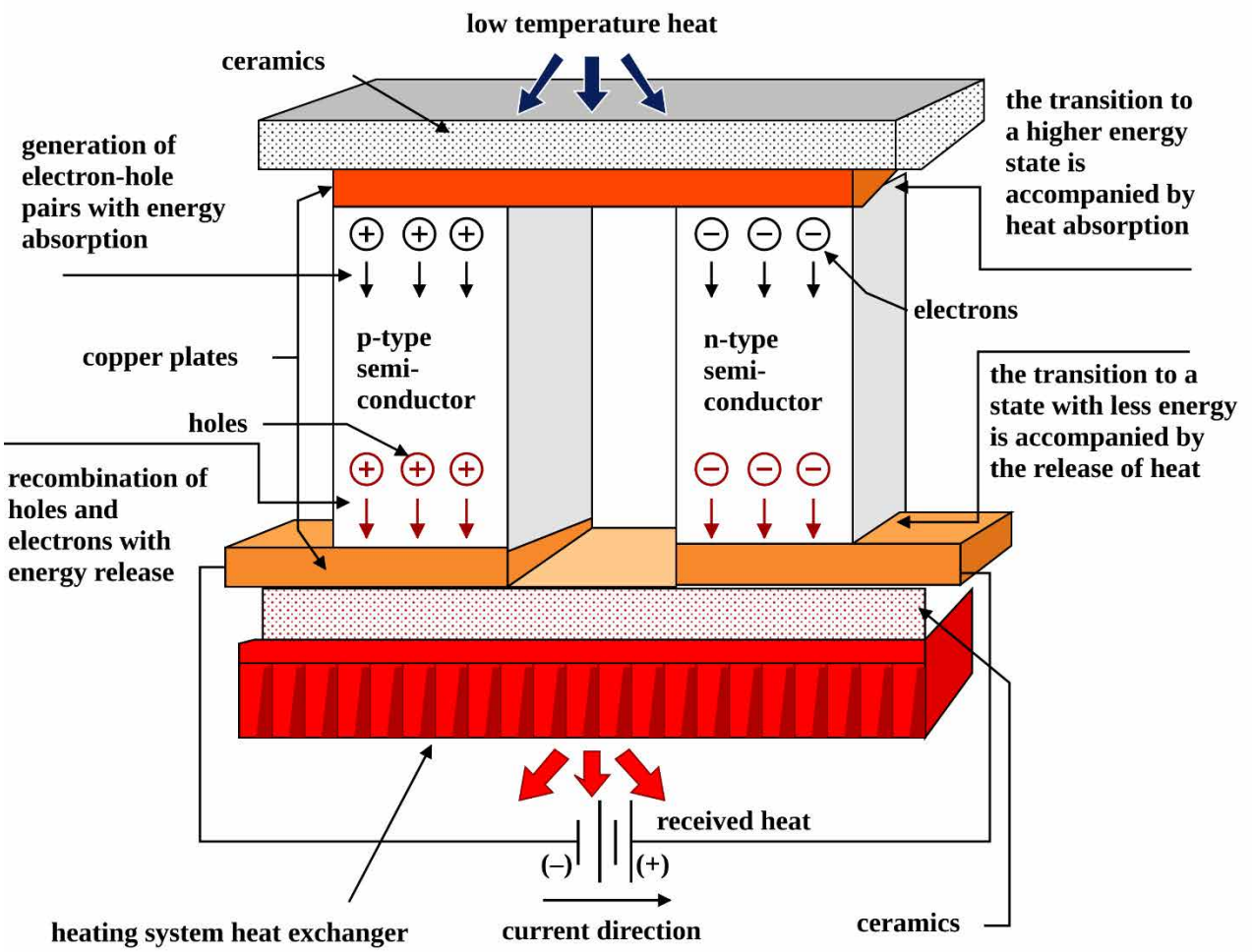


**Fig. 12.7. Operating principle of the thermoelectric module of the heat pump**

At the second junction, electrons from a ***p***-type semiconductor pass into a metal. In a ***p***-type semiconductor, electrons in this zone are formed by generating electron-hole pairs. In the process of generating electron-hole pairs, from an energy point of view, electrons move from the valence band (from a state with a lower energy) to the conduction band (to a state with a higher energy), which is accompanied by energy absorption. Therefore, the region at the boundary of this transition absorbs external heat (fig. 12.8).

At the next transition, electrons move from copper to an ***n***-type semiconductor. The energy of electrons in a metal and a semiconductor is different, and the electrons in a semiconductor have a higher energy than in a metal. The transition of electrons from a metal to an ***n***-type semiconductor, from an energy point of view, corresponds to an increase in the energy of electrons and, therefore, is accompanied by energy absorption. As a result, external heat is absorbed at the interface of the "copper- ***n***-type semiconductor" transition.

At the last junction, electrons move from an ***n***-type semiconductor to copper. In this case, we are dealing with an energy process that is the reverse of the one discussed earlier, that is, during the transition, electrons move from a state with a higher energy (the conduction band in a semiconductor) to a state with a lower energy (the conduction band in a metal). As a result, of this transition, energy is released, which leads to heating of the "***n***-type semiconductor-copper" transition zone. The resulting heat is

removed by a heat exchanger for heating or preparing warm water.

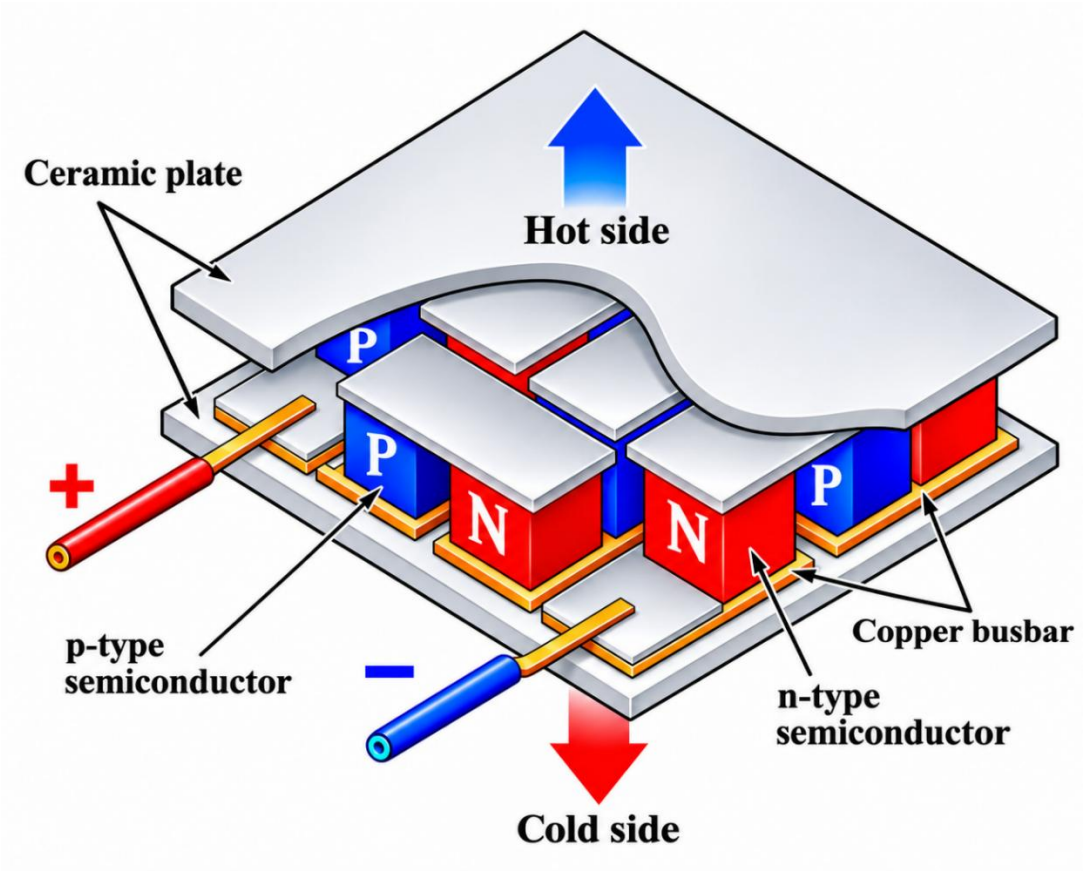


**Fig. 12.8. Structure of the thermoelectric module**

Therefore, as a result of the passage of current through such a sequence of transitions, two transitions will heat up, and two will cool down. In a Peltier element, the number of connected transitions can be very large. But most importantly, those that are heated are located in one plane, and those that are cooled – in another. Thus, one ceramic plate heats up, and the other, on the contrary, cools down.

The amount of absorbed heat $E_1$ depends on the difference in the coefficients of thermoelectric forces of the combined materials, the current strength and the time of action. "Drive" is the energy EW received from a DC voltage source.

The performance factor $E_t$ is determined by the dependency:

$$E_t = \frac{E_2}{E_W} = \frac{E_1 + E_W}{E_W}, \qquad (12.3)$$

where: $E_1$ – heat absorbed from the lower heat source, J; $E_2$ – heat transferred to the heating system, J; $E_W$ – energy that is taken from an electric current source, J.

The value of the conversion coefficient $E_t$ of thermoelectric heat pumps is significantly lower than of compressor HP, and is at the level of 1.4 to 2. Thermoelectric heat pumps have found their application primarily in cooling systems of electronic devices (for example, powerful computers), in air conditioners and low-power refrigerators, room heating and water heating, etc.

**Chemical heat pumps** operate on the basis of using heat that is released during endothermic and exothermic chemical reactions. These pumps are only in the research phase, so they are not known to the general public.

## 12.3. Heating systems based on heat pumps

The condition for the operation of the heat pump is the presence of an energy source, heat from which will be taken away to ensure the boiling process of the working fluid in the evaporator.

According to the type of heat source, pumps are divided into the following groups:

- **geothermal –** the heat of the soil or underground water is used;
- **air –** the heat of the surrounding air is used;
- **use secondary heat** from another thermal process that needs to be disposed of (for example, process heat or waste water).

The temperature of the heat source is crucial for the performance and efficiency of the heat pump. Therefore, when choosing the type of equipment, it is very important to properly design the entire heat supply system to determine the required heat pump capacity and operating temperature.

In the case of using geothermal energy, it is mandatory to survey the land plot to determine the type of soil, its heat capacity, geological features and the possibility of placing soil probes or reservoirs. When using water as a heat source, it is mandatory to conduct a chemical analysis of the water.

**Soil** is the most optimal source of heat dissipation. Early at a depth of 5-7 meters, the soil temperature has almost become throughout the year and is 10–12$^{o}$C (fig. 12.9).

Soil accumulates solar radiation, which falls on its surface and constantly receives heat from the Earth's core. Soil is characterized by a stable temperature, which does not depend much on the weather. The heat capacity of the soil depends on several factors – the type of soil, geological composition, and humidity.

The higher the humidity, the more heat you can get. Moist clay soil will have better thermal characteristics, and a high sand content will significantly reduce the amount of heat taken away.

**Geothermal energy extraction** can be carried out by several methods:

- using horizontal or vertical soil collectors;
- using vertical soil probes;
- using a water circuit located in a well.

**Soil collector.** The primary circuit of a geothermal heat pump can be made in the form of a horizontal soil collector (fig. 12.10, a), which is located at a depth of 1.2–1.5 m (0.2 m deeper than the depth of freezing of the soil). This depth ensures a fairly stable temperature throughout the year.

Heat transfer from the soil environment depends on the type of soil and ranges from 10 to 35 W/m$^2$ (dry sand – 10 W/m$^2$, dry clay – 20 W/m$^2$, wet clay – 25 W/m$^2$, highly moistened clay – 35 W/m$^2$). The device of a soil collector requires a fairly significant area of land. You can reduce the investment area by using spiral collectors (fig. 12.10, b).

In addition to the horizontal collector, a vertical collector can also be used, which occupies a smaller area, but requires a larger amount of earthworks due to the greater depth (15-30 m), which in turn can lead to an increase in the cost of the geothermal system.

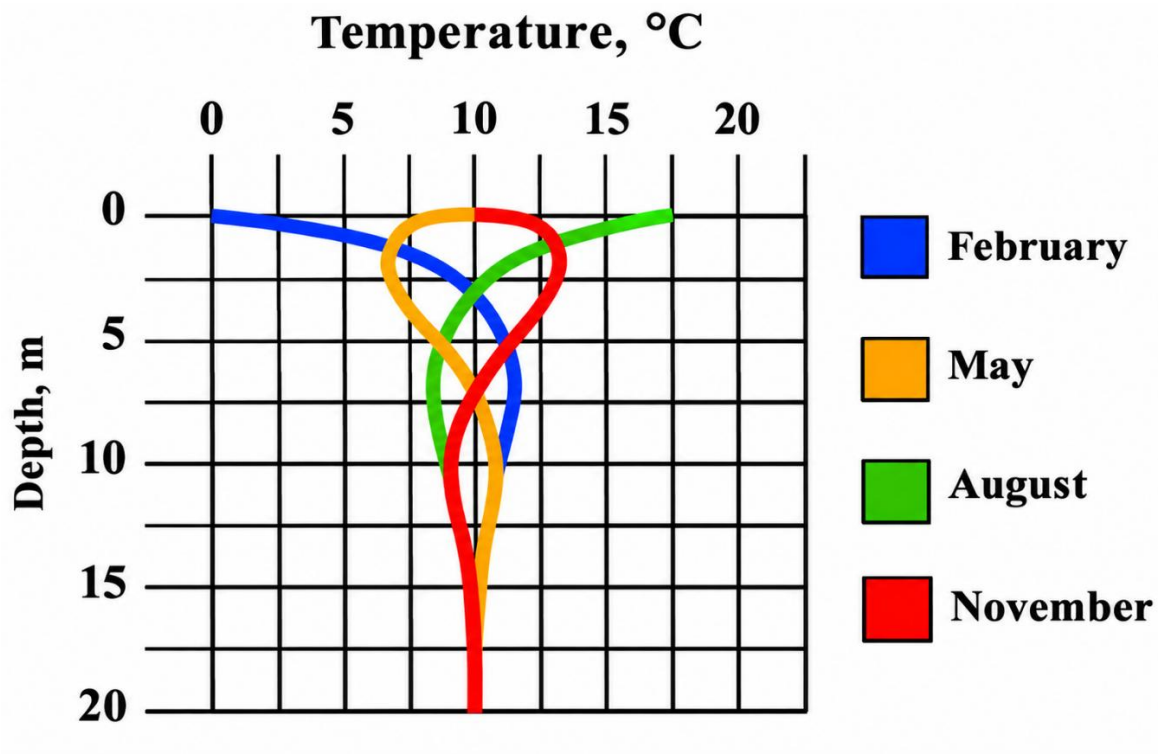


**Fig. 12.9. Dynamics of soil temperature depending on depth**

One of the varieties of vertical collector is energy baskets (fig. 12.10, c), which allows increasing heat extraction per unit area, ensuring compactness and reducing the installation depth – 4 m.

When planning a soil collector, it is necessary to observe a hydraulic balance – all contours must be the same length. Circuits with a maximum length of 100 m should be used to prevent increased consumption and energy consumption by circulation pumps. The land plot on which the ground collector is located should have minimal development and shading in order to fully recover during the warm period of the year. It i forbidden to plant trees with a developed root system over the collector, including to prevent damage to the collectors themselves.

Solar radiation and precipitation ensure complete regeneration of the soil for efficient return of accumulated heat during the heating season. Soil collectors are made of polyethylene pipes of different diameters. Besides, on the market there are ready-made modules in the form of pre-assembled pipe sections.

When using **vertical soil probes** (fig. 12.11) the heat pump operates with stable performance and high efficiency throughout the year. The probes are lowered to a depth of 40 to 120 m. From one meter of the well, you can get from 30 to 70 W of heat. The average value is about 50 W/m, which is mainly used to calculate the total length of the geothermal probe system.

Insufficient length and number of ground probes will lead to a decrease in the performance of the heat pump, freezing of wells and, as a result, insufficient heat to warm the object.

Heat extraction takes place using probes made of polyethylene pipes. These can be 2 or 4-tube U-shaped probes. Today, in addition to probes with smooth tubes, turbulent probes with an internal spiral thread are also available to create a turbulent

flow. The use of such turbochargers reduces hydraulic resistance and increases system efficiency.

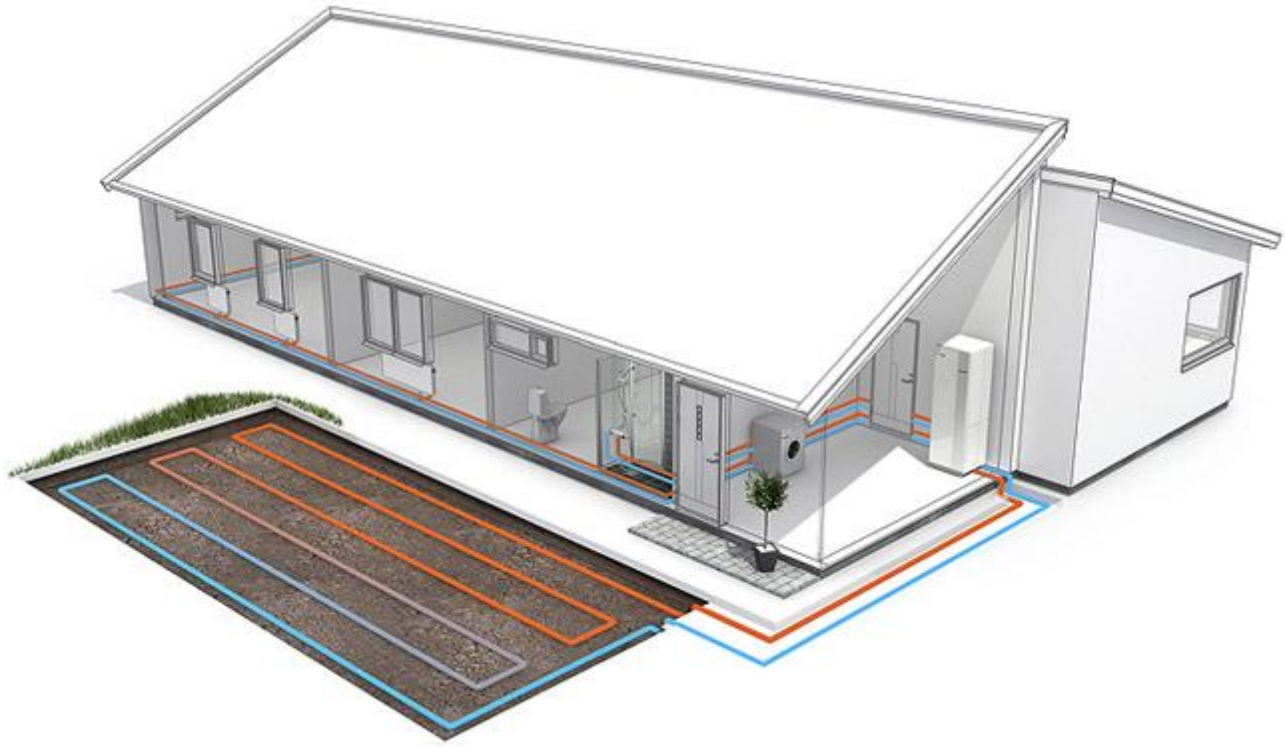

**a) horizontal collector**



**b) spiral collector**



**c) vertical collector**

**Fig. 12.10. Types of soil collectors of the heat pump**

Wells with soil probes placed in them should be filled with a fixing thermal solution that has certain thermal conductivity parameters. In addition, the solution protects the probes from mechanical damage. When planning the location of Earth probes, it is necessary to observe the minimum distances between wells – from 5 to 6 m. it is also forbidden to plant trees with a deep root system at the location of geothermal probes.

Non-freezing solutions are used as a heat carrier for soil probes, for example, based on ethylene glycol (freezing point up to 15°C). Non-freezing solutions must be environmentally neutral, because in the event of an accident and leak, contamination

of ground water and a significant adjacent territory will occur.

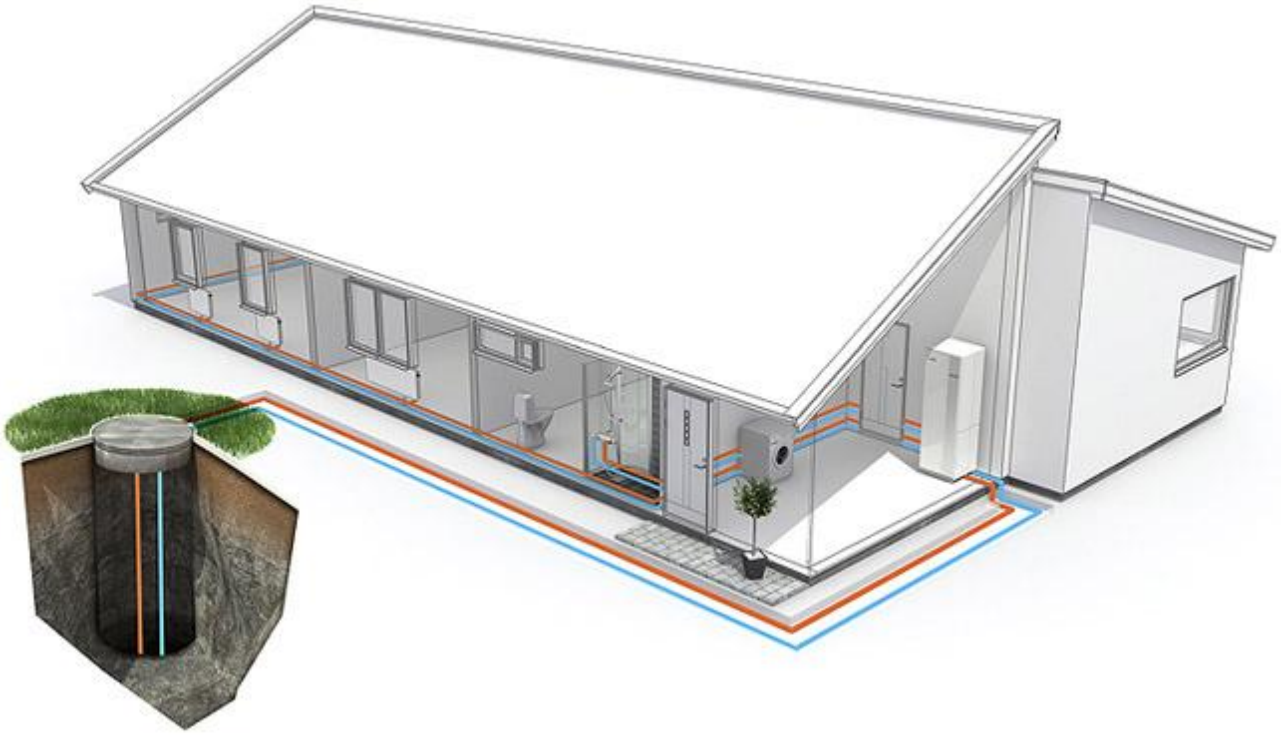

**Fig. 12.11. Scheme of application of vertical soil probes**

**Heat pump circuit in ground water** (fig. 12.12). Underground ground water is one of the most efficient sources of primary heat for the operation of heat pumps. Throughout the year, the ground water temperature remains stable and ranges from 7 to 12°C.

The water energy utilization scheme includes two wells:

– "upper" provides water extraction for supply to the heat exchanger of the water-water heat pump, where heat transfer takes place;

– "lower" one accepts water cooled by a heat pump.

Heat is removed using pipes submerged in water. The distance between the point of heat generation (water intake) and the point of return (return of used in heat pump water) must be at least 10 meters. The heat transfer of ground water can reach 80 W from one meter of well depth. In most cases, the water quality does not allow you to work directly with high-efficiency heat exchangers of heat pumps. In this case, it is recommended to install an intermediate heat exchanger that meets the specific operating conditions and protects the heat pump.

Both wells must correspond to the volume of water consumed by the heat pump. To obtain 1 kW of heat from ground water, it is necessary to ensure the system capacity at the level of 0.25 $m^3$/h.

Surface water can also be used as a heat source. But when designing such a scheme, you need to take into account significant fluctuations in water temperature depending on the time of year.

**The heat source is ambient air.** An outdoor unit is installed on the street, which contains a heat exchanger and a fan (fig. 12.13). Air is supplied to the evaporator,

where heat is taken out and after cooling, it returns to the environment again.

Modern technologies make it possible to operate air heat pumps up to an outdoor temperature of up to minus 25°C. To operate at low temperatures, the pumps are equipped with an additional electric heater or operate in a system with an additional heat generator (for example, a wood-burning fireplace equipped with a water circuit).

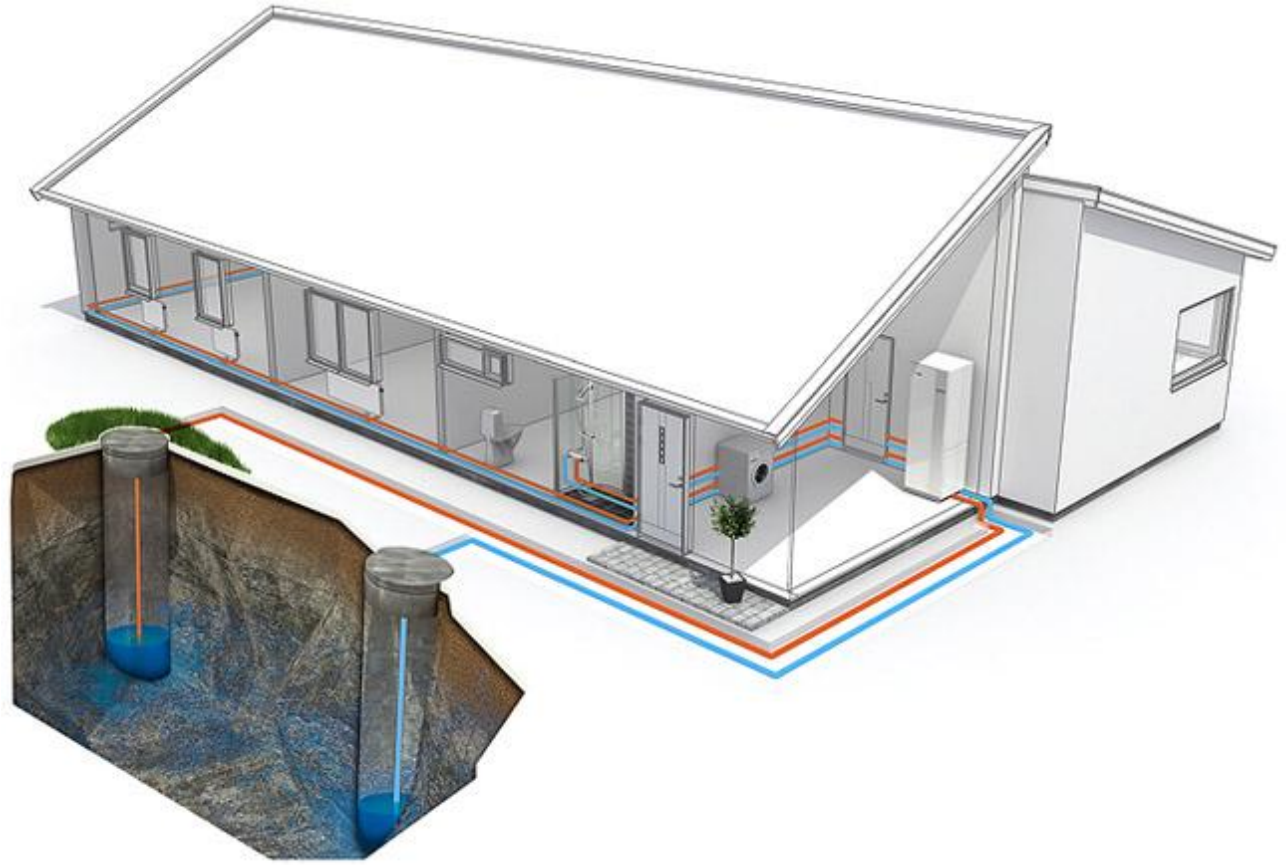

**Fig. 12.12. Diagram of a heat pump using ground water heat**



**Fig. 12.13. Diagram of an air heat pump**

Using this type of equipment for heating passive and energy-efficient homes, it is possible to fully provide heating only thanks to an air heat pump. Even at low outdoor temperatures, such homes require a small amount of heat. An important factor to consider when planning air heat pumps is the sound characteristics. The noise characteristics will determine the comfort of living near such a heat pump.

The main cause of air pump noise during operation is the fan. The ventilation grate and other components can also cause noise. Waterkotte's use of the latest owl-like impeller shape has improved the acoustic performance of the fan (fig. 12.14, a). Matching the parameters of the outdoor unit grid (fig. 12.14, b) with fan performance, it reduced the sound pressure of the heat pump to 34 dB at a distance of 4 m.

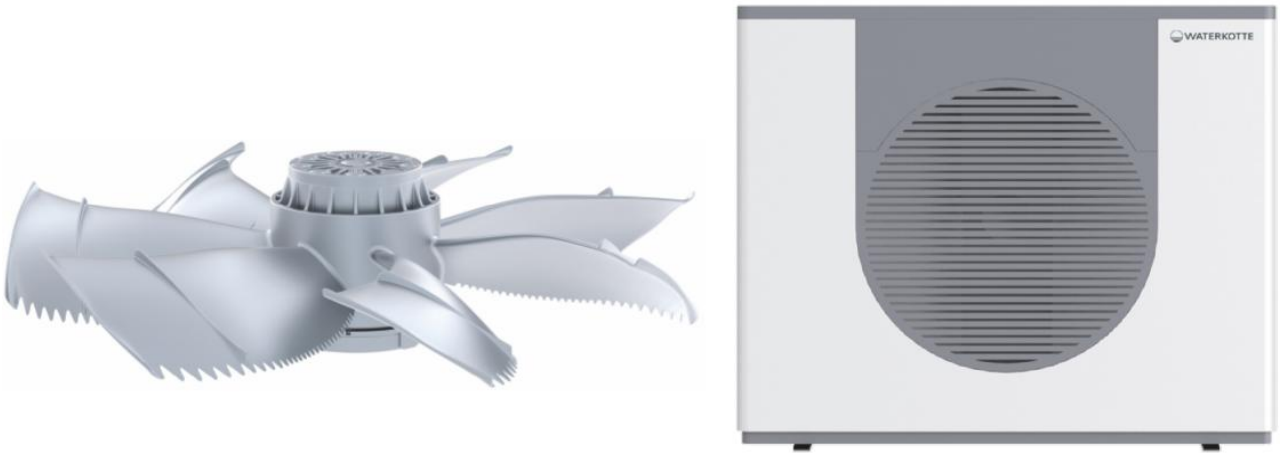


**a) fan** **b) outdoor unit**

**Fig. 12.14. Components of the EcoTouch Air heat pump**

Monoblock air pumps with capacities from 8 to 12 kW have become widely used in recent years. The design of such a heat pump provides for the installation of a refrigeration and hydraulic circuit in the outdoor unit, only the heating system pipelines and a control regulator (or hydraulic station) are installed in the room. The advantages of such pumps are lower cost (no earthworks), easy installation and no work with the refrigeration circuit (freon).

The best solution for using air heat pumps is **a bivalent mode of operation** – a combination with the water circuit of other heat sources (gas or pellet boiler, wood-burning or pellet fireplace). Under this scheme, from 70 to 90% of the heat an air-to-water heat pump will provide load and only at very low temperatures will an additional heat generator be put into operation.

Depending on the medium through which heat is taken and the medium through which it is transferred to the internal heat exchanger, there are several main heating systems: **air-to-air, air-to-water, water-to-water**.

The classification presented is somewhat simplified, the definition of "water" means any liquid heat carrier, and the definition of "air" includes flue gases, steam, secondary heat of the ventilation system, etc.

The composition of heating systems, in addition to the presented elements of heat pumps, includes internal and external heat exchangers, the structure of which

depends on the type of heating system.

The task of **internal heat exchangers** is to transfer heat to the interior of the house or to the installation of water heating, or to accumulate heat from known sources.

The task of **external heat exchangers** is to create the ability to absorb heat from the environment located outside the house or from another available heat source, or to transfer heat to this environment.

**Air-to-air heating system** (fig. 12.15). In this system, heat is taken from the outside air or sucked in from a heated room and transferred to the heating system. In fact, heat pumps of this type are modern air conditioners that cannot only cool in summer, but also heat in winter. They are cheap to install, as they do not require laying an external collector, are quite economical and quiet.

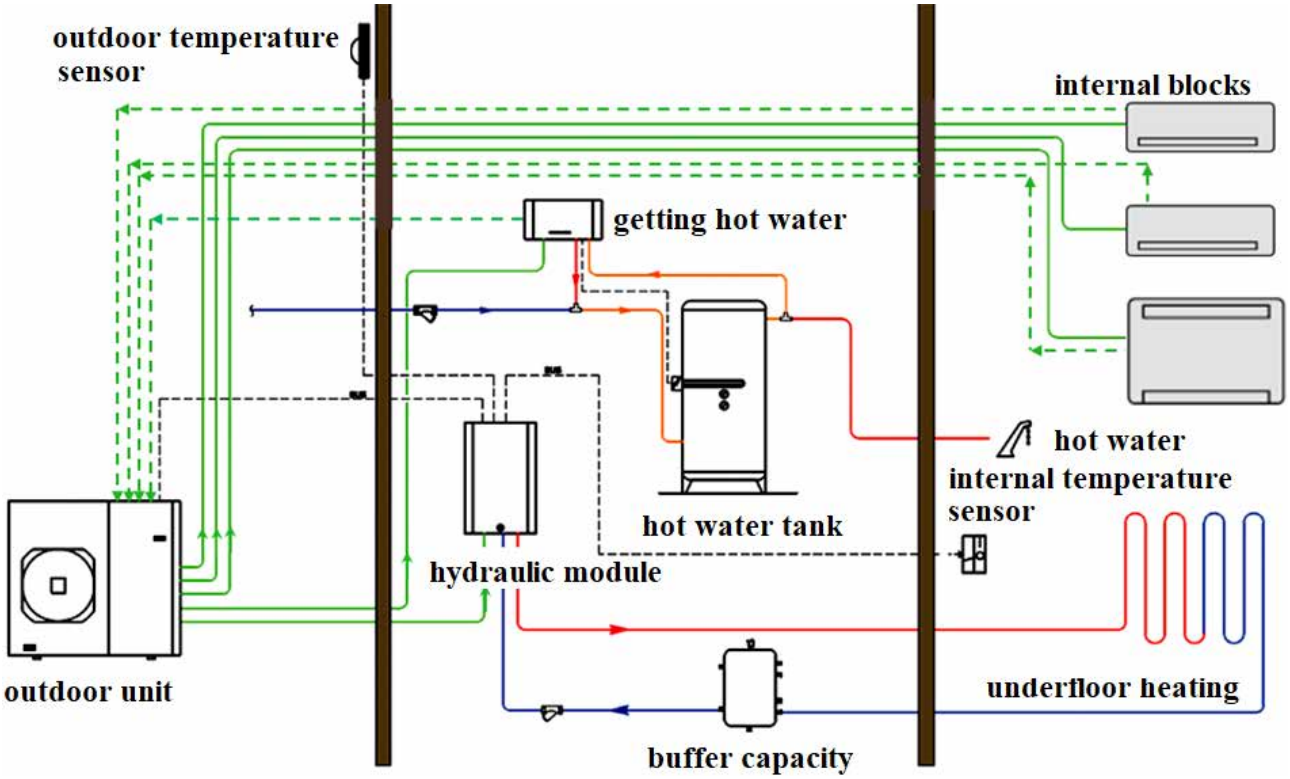


**Fig. 12.15. Structure of a heating system based on an air-to-air and air-to-water heat pump**

These heat pumps can be available in two versions:

– monoblock option (rooftop);

– "split" option, while the **outdoor unit** is an "air-to-water" heat pump, and fancoils act as **indoor units**.

**Rooftop** is a combination of outdoor and indoor units in one package. They are used for servicing large rooms with the possibility of using the heat of technological processes or ventilation.

**Fancoil** (fan convector) is a heat exchanger supplied with heat or a coolant (most often water), through which air is passed using a built-in fan, which, depending on the water temperature, is either heated or cooled.

Fancoils automatically maintain the set temperature, as well as clean and mix fresh air. In winter, fancoils can completely replace the water heating system.

To obtain hot water for household needs, a heater and a boiler with the possibility of electric heating are added to the air-to-air system. The advantage of this combination is the possibility of obtaining hot water regardless of the mode in which the heat pump operates – for heating or cooling (as an air conditioner) of the room. In order to heat the premises with underfloor heating or radiators, the air-to-air system is retrofitted with a hydraulic module. The main task of the hydraulic module is to obtain hot water for the room heating system, depending on the ambient temperature, it can also supply water to water convectors. In this case, we get an air-to-water system.

**"Air-to-water" heating system.** In this system, heat is taken from the outside air or sucked in from a heated room and transferred, due to the circulation of the heat pump refrigerant, to water, which is used as a heating medium in the room heating system and the preparation of hot water for domestic needs.

As indoor units, in place of fan convectors, radiators of the traditional room heating system are used, complementing the underfloor heating system.

In **a "water-to-water" heating system,** heat is taken from the water and transferred by the heat pump refrigerant circulation to the consumer, while ground, surface water and soil can be used as a low-temperature heat source.

From the point of view of the method of operation, the following heat pump systems are distinguished: monovalent, bivalent, bivalent-parallel, alternative.

The operation of a heat pump in **a monovalent system** consists in the fact that the heat pump is the only source that provides a constant supply of heat to the heating system. This system is only used when the heat source has a relatively constant and high temperature throughout the year (for example, municipal wastewater).

**The bivalent system** of operation of a heat pump consists in the fact that it works together with other heating installations. The heat pump provides heat only within the limits possible (depending on external conditions), after which the traditional heating system takes part in further heating of the room. The switching limit depends on the temperature at the outlet of the heat pump, which provides the necessary heat output for heating the room.

This system is often used in practice, because sometimes the power of the heat pump, especially in the cold season, is not always enough to provide the desired temperature conditions.

In **a bivalent parallel system**, as in the system presented above, the heat pump works together with another heating system. The only difference between these systems is that in a bivalent parallel system, if the heat pump cannot reach the required temperature, another heating device is switched on in parallel.

The operation of a heat pump in **an alternative system** consists in the fact that the heat pump, depending on the existing needs, works as a heating device, or as a cooling device. A three-way valve controlled by a thermostat causes a change in the direction of flow of the working medium. Each heat exchanger periodically operates as a condenser or evaporator. Thanks to this, for example, water pumped through heating devices, depending on the needs, is heated (indoor heating) or cooled (indoor air conditioning).

In fig. 12.16 the scheme of heating and hot water supply of a bivalent parallel system based on a heat pump 4 with a solar collector 2, which is used for heating

premises and heating warm water for domestic needs, is presented.

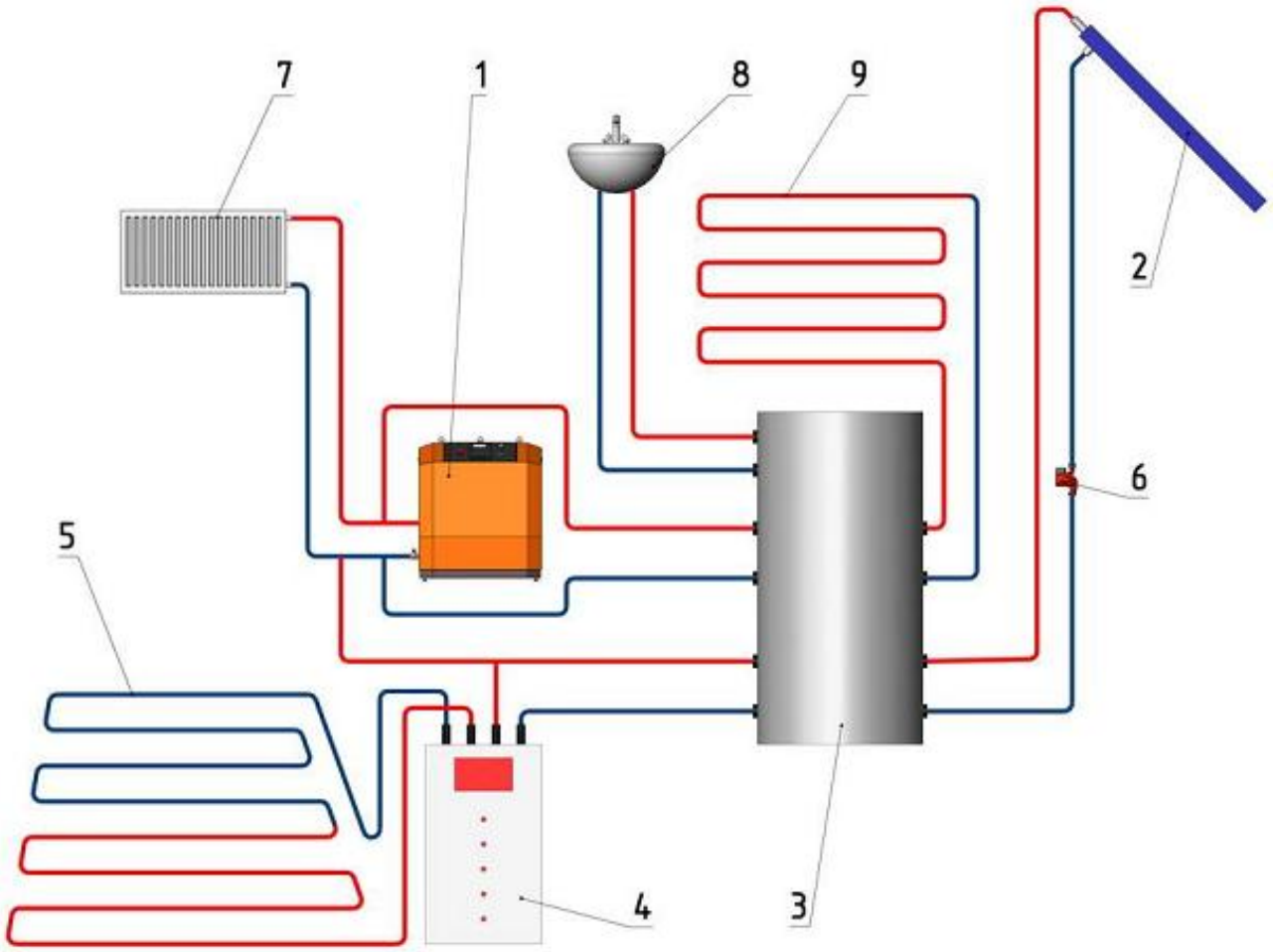


**1 – gas boiler (heat generator); 2 – solar collector; 3 – water tank; 4 – heat pump; 5 – lower heat source; 6 – solar collector system pump; 7 – heating radiator; 8 – hot water for domestic needs; 9 – underfloor heating system**
**Fig. 12.16. Diagram of a bivalent parallel system with a solar collector**

The heat absorbed by the solar collector is stored in the water heat accumulator 3, if necessary, the water tank can be used as a lower heat source for the heat pump. With solar power and a heat pump, you can cover about 65% of your annual heat needs. The rest is covered by additional heating (for example, gas). The heating capabilities of the heat pump are at the temperature level of ready-to-use water in the range from 55 to 65 °C. Therefore, a heat accumulator is used to equalize the daily fluctuations in the need for heat and hot water.

### 12.4. Non-standard solutions for storing low-temperature energy

Recently, more and more attention has been paid to the search for non-traditional, and at the same time, non-standard approaches to obtaining a low-temperature heat source for heat pumps.

Relatively new technologies include geothermal ventilation, "ice" heating, and a magnetic heat pump.

**Geothermal ventilation** is based on the principle of a heat pump, designed to stabilize the air temperature throughout the year in the range from 16 to 20 °C (fig. 12.17).

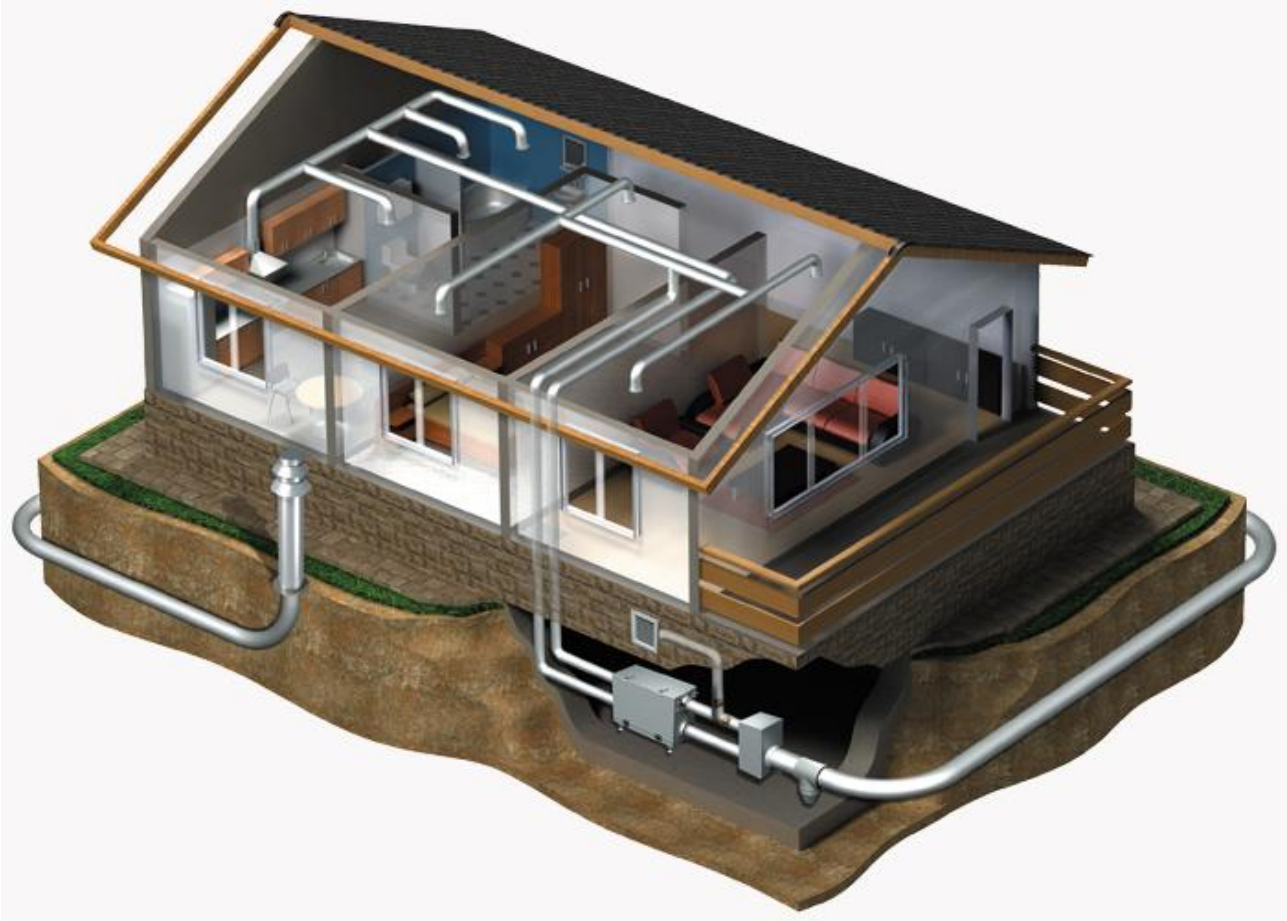

**Fig. 12.17. Geothermal ventilation system**

This has become possible thanks to the use of a system of underground pipelines, which act according to the basic law of heat exchange ("more heated bodies give heat to less heated ones"). Pipelines are passed through the soil, the temperature of which is in the range from 5 to 10°C all year round, then the soil heats up cold street air in winter, and cools warm indoor air in summer.

Two variants of geothermal systems are offered:

– where the ground heat exchanger is an air duct made of stainless steel with good aerodynamic characteristics;

– where the ground heat exchanger is a "pipe in a pipe" air duct, in the inner part of which outgoing air (exhaust) moves, and in the outer pipe – air that is taken from the street, that is, supply air (fresh).

Experimental studies have shown that in winter, a ground heat exchanger can heat the supply air entering the room to a temperature above zero degrees, and in summer it can cool the outside air to 18-20°C.

**"Ice" heating.** When the aggregate state of water changes, significant energy (phase transition energy) is released, which can be used as a lower heat source. We are talking about the fact that water emits a lot of thermal energy during freezing

(330 kJ/kg), which is almost 80 times more than is required for its heating-cooling by 1 °C. At the same time, it does not actually change its temperature (about -1 °C) until the entire volume freezes. The transition of water from a liquid to a solid aggregate state occurs in an ice tank.

The heating system based on the use of water crystallization energy consists of a heat pump, a clean water tank (ice tank with heat exchanger), solar collectors (preferably using air absorbers – composite solar air collectors) and an automatic control system (fig. 12.18).

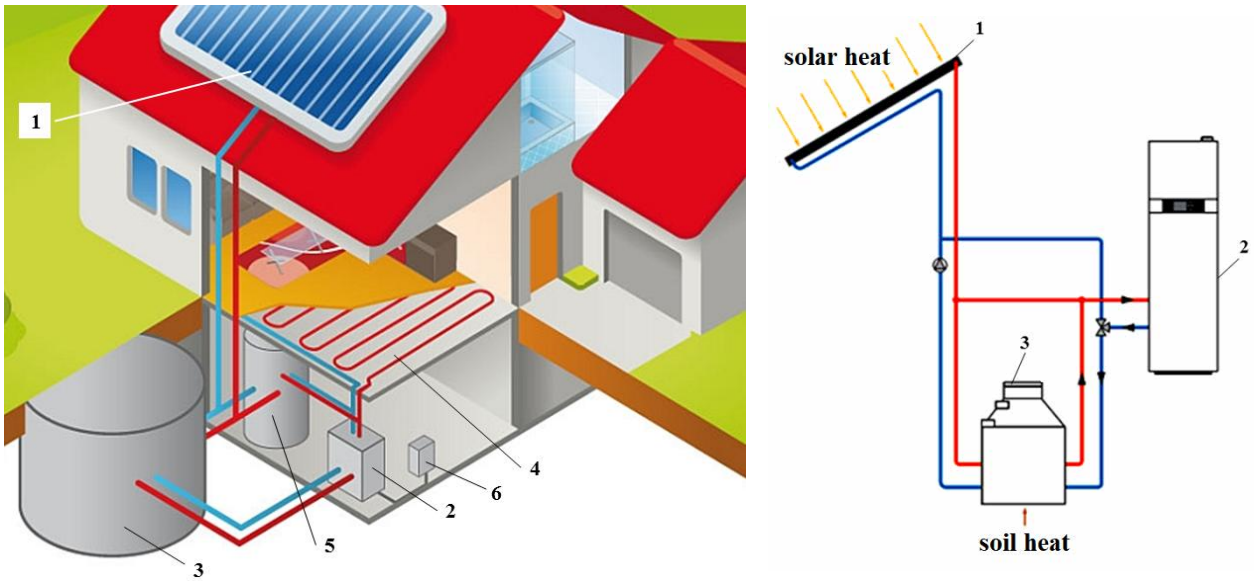


**a) general view of the heating system** **b) operating principle**

**1 – solar collector; 2 – heat pump; 3 – ice tank; 4 – underfloor heating system; 5 – hot water storage tank; 6 – controller**

**Fig. 12.18. Heating system using water phase transition energy**

Plastic pipes of the brine circuit of the heat pump are laid in a spiral in the tank. A regenerative heat exchanger is located on the outer wall of the hopper. Through it, heat from solar collectors and air absorbers enters the ice storage facility. As soon as the water temperature in the tank drops below the temperature of the surrounding soil, geothermal heat takes effect. Even when the bunker is completely frozen, it continues to receive heat from the surrounding ground, the amount of which depends on the type of soil. In summer, on the contrary, excess heat from the tank will be removed through the walls to the ground, thus eliminating the problem of its overheating.

The heat pump takes heat from the tank until the entire volume of water freezes. Then the tank is regenerated due to the heat of the soil and the heat of the air and the sun (using solar collectors). The system operates at the freezing-thawing limit of water, that is, at temperatures from -1 to +1°C. In this temperature range, water allows accumulating much more energy – 330 kJ/kg than at other temperatures. From one liter of ice (approximately 916 grams), you can get about 306 kJ of energy. This corresponds to approximately 0.085 kWh. The combustion energy of one liter of diesel fuel is 10 kWh. Thus, 120 liters of ice are identical to one liter of diesel fuel, and the volume of the tank per 10 thousand liters (the minimum capacity for individual

residential buildings) accumulates approximately 850 kWh of energy released during each freezing cycle. In European countries, especially in Germany, ice heating is quite widely used – there is a large portfolio of relevant objects – both individual residential buildings and multi-apartment, office, commercial and industrial buildings. In 2014, near the city of Hamburg was built a neighborhood of 500 apartments (the largest ice heating system in the world), the central heating of which is organized using ice in a tank for 1.5 million liters of water.

An ice-based heating system can be compared in cost to the traditional method of organizing heating based on a conventional heat pump. Its use may be justified in cases where space on the site is limited, or there are restrictions on the installation of deep wells for heat pump probes. In addition, the limited amount of energy due to the size of the tank, as well as the low-temperature heating (underfloor heating) suitable "by nature" for heat pumps, provides for the use of ice heating only in buildings with a high degree of energy efficiency, that is, very high-quality designed and well-insulated houses.

**Magnetic heat pump.** The principle of operation of a magnetic heat pump is based on a physical phenomenon called the magnetocaloric effect. The effect is more pronounced in para - and ferromagnets, which include substances such as salts of iron, nickel, cobalt and a number of rare earth metals. Once in an external magnetic field, these substances begin to magnetize and produce heat (fig. 12.19).

This is achieved by reorienting the magnetic moments of microparticles along the field lines of force. When substances leave the external magnetic field, they demagnetize. This leads to the fact that the internal energy of steam and ferromagnets is spent on disordering magnetic moments, which leads to their rapid cooling.

This technology of magnetic cooling and heating has a number of advantages over the classic scheme. First of all, it is high energy efficiency. In terms of the coefficient of conversion of electricity to cold, such magnetic installations are already superior to compressor samples.

The efficiency of the laboratory prototype of such a magnetic refrigerating machine was 60%, while the best indicator of a traditional installation barely reaches 40%. In addition, the operation of magnetic climate technology is closer to the ideal thermal cycle.

As for environmental friendliness, even here the "novelty" promises to be successful due to the replacement of refrigerants that negatively affect the ozone layer of our planet with ordinary water. Ensuring smooth operation and the absence of vibrations inherent in compressor devices is another significant argument in favor of the technology of magnetic heat pumps and refrigeration units.

Until recently, the materials with the most pronounced magnito-thermal effect included salts of the rare earth metal gadolinium (Gd). But the reason for the impossibility of using this element in household appliances is banal: gadolinium is very expensive (about 200 $ per kg) and is mainly used in space technology.

As part of their research work, Chubu Electric Power and Santoku managed to technologically obtain a new working substance called lanthanated iron. This material is almost twice as high as gadolinium in the range of temperature changes in the magnetic field.

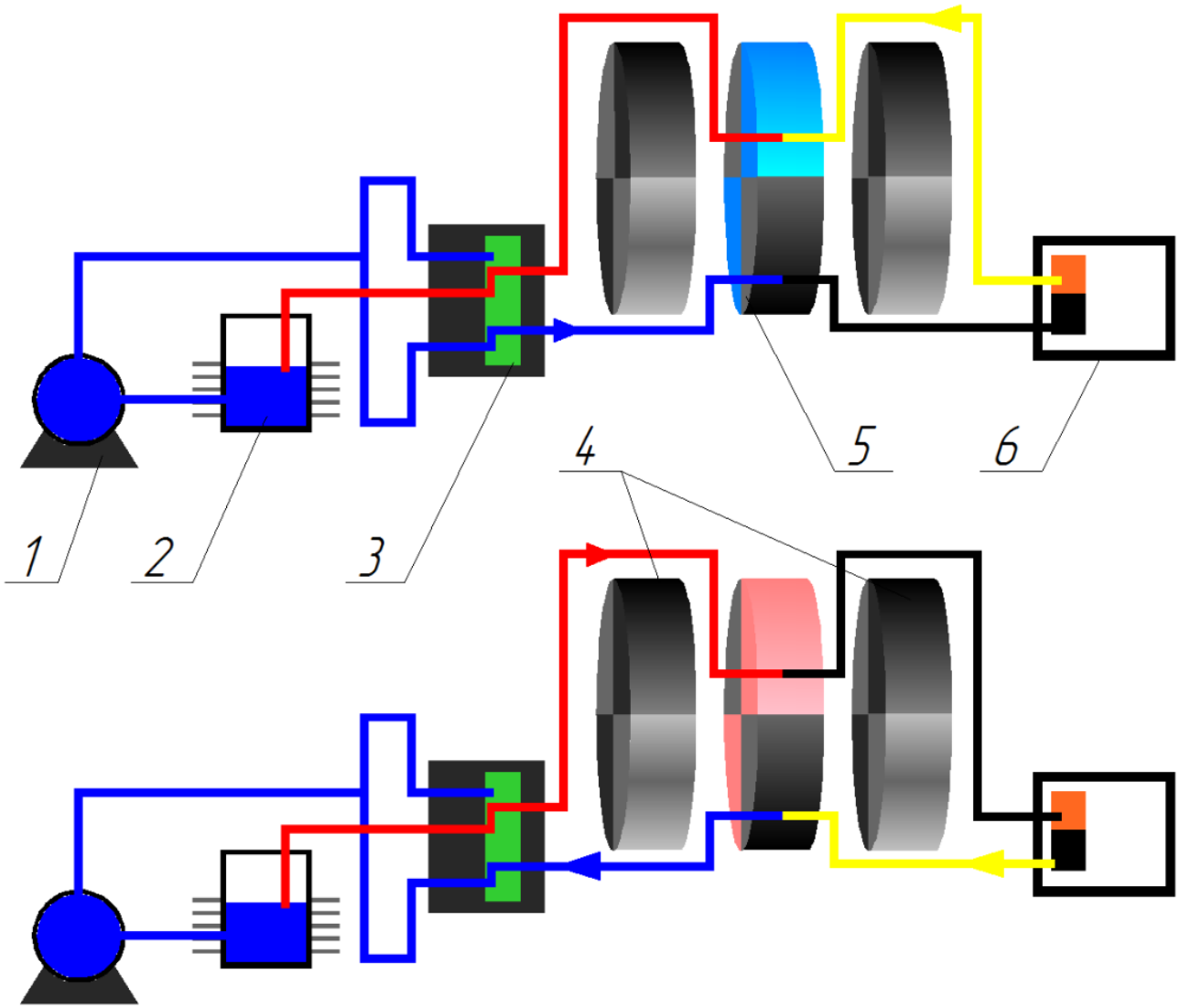


**1 – pump; 2 – water tank; 3 – rotary valve; 4 – permanent magnet; 5 – magnetic working substance; 6 – heat exchanger**

**Fig. 12.19. Diagram of operation of a magnetic heat pump in cooling-heating mode**

Such solutions and unconventional approaches in the climate market allow us to hope that the last word has not yet been said in the organization of an optimal microclimate.

### 12.5. Efficiency of using heat pumps in heat supply systems

The growing demand for heat pumps in the EU countries indicates the justification for using low-temperature energy sources, which, first of all, is based on significant savings in home heating costs. However, the heat pump justifies itself only in a well-insulated house, with heat losses of no more than 100 W/m$^2$. Therefore, the better the insulated house, the more profitable its operation. This, in turn, imposes additional requirements for high-quality design and the use of high-quality construction and thermal insulation materials.

Studies of leading manufacturers of heat pump equipment have established

(fig. 12.20) that the smaller the difference ((Δ$T$) between the temperature of the heat source ($T_C$) and the temperature of the heat carrier in the heating circuit ($T_H$), the greater the heat coefficient of performance (***COP***).

**Coefficient of performance** is the ratio of the heat obtained as a result of condensation of the released high-temperature energy to the costs that consist in the need to supply additional mechanical energy from the outside to compress the refrigerant in the heat pump compressor. You can determine the conversion factor using the **p-h** diagram with the help of the formula:

$$COP = \frac{h_3 - h_4}{h_3 - h_2}, \quad (12.4)$$

where: $h_2$ – enthalpy at the beginning of refrigerant compression, W h/kg; $h_3$ – enthalpy at the end of compression – at the beginning of heat release, W h/kg; $h_4$ – enthalpy at the end of refrigerant liquefaction, W h/kg.

Coefficient of performance for modern heat pumps ranges from 3.5 to 5.5, which means how many times the heat pump gives more energy from the cost of obtaining it. It was found that reducing the temperature of the heating medium by 1 K increases the conversion factor by 2.5%, and increasing the temperature of a low-temperature source by 1 K increases the conversion factor by 2.7%.

It is more profitable to heat the room with low-temperature heating systems: such as "underfloor heating" or air heating (such as "air-to-air"), because in these cases the temperature of the coolant according to medical requirements and building codes will not exceed the maximum permissible value of 40°C, and the conversion factor has the highest value (*COP*=5.7 for the "underfloor heating" system and *COP*=3.3 for radiator heating).

In order to ensure maximum efficiency of using heat pumps, they are operated in conjunction with an additional heat generator (bivalent heating scheme). Since the number of really cold days does not exceed 10 to 15% of the duration of the heating season, as a rule, the heat pump capacity is assigned at the level of 70-80% of the calculated one.

The heat pump covers all the heat needs of the house until the street temperature falls below a certain calculated level (bivalence temperature). From this point on, the second heat generator (electric heater, gas or solid fuel boiler, solar collector, etc.) is put into operation.

The higher the load factor of the heat pump, the more appropriate it is to use it. For example, water-heating systems for livestock farms operate continuously throughout the year. Their load factor (capacity utilization during the year) can reach 80%. In the heating systems of a private house, the equipment load factor is about 30-40%. In the first case, the annual savings and payback of a heat pump of equal capacity will be 2-3 times higher.

The higher is the heat output required, the more appropriate is the use of heat pumps. First, the unit cost for high-power heat pumps is 3-5 times lower than for low-power heat pumps. Secondly, the higher the volume of heat consumption, the greater the savings from the use of heat pumps in absolute terms.

The undoubted advantages of heat pumps are cost-effectiveness, a wide range of applications, environmental friendliness, versatility and safety.

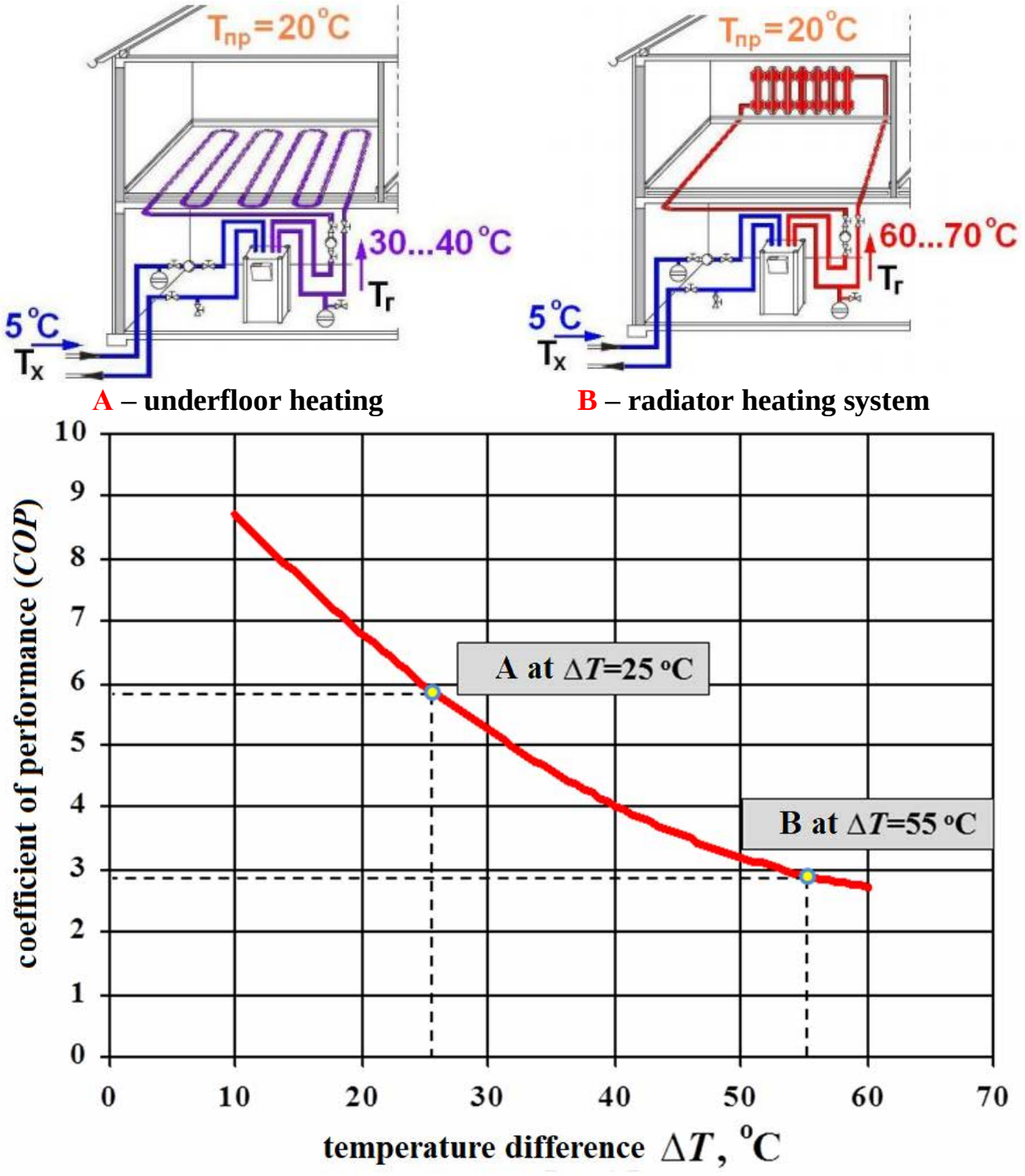


**Fig. 12.20. Efficiency of the heat pump in various heating systems (dependence of the *COP* on the temperature difference $\Delta T=T_h-T_c$)**

**Cost-effectiveness.** The efficiency of using heat pumps is higher than that of any fuel-burning boilers, and the efficiency coefficient ($E$) of heat pumps is always greater than one. For example, if the power per compressor drive is 1 kW and the power of a low-temperature source is 3 kW, we get an efficiency coefficient equal to $E$=4 (fig. 12.21).

**Wide range of applications.** There is a lot of scattered solar heat on our planet. Soil and air are everywhere, so there is no problem with a low-temperature energy

source. Heat pumps, regardless of weather conditions and the availability of fossil fuels, will ensure that this heat is used for the needs of consumers. All you need for this is electrical energy. If it is not available, this is also not a problem – some models of heat pumps can be paired with solar collectors, wind turbines, diesel generators, etc.

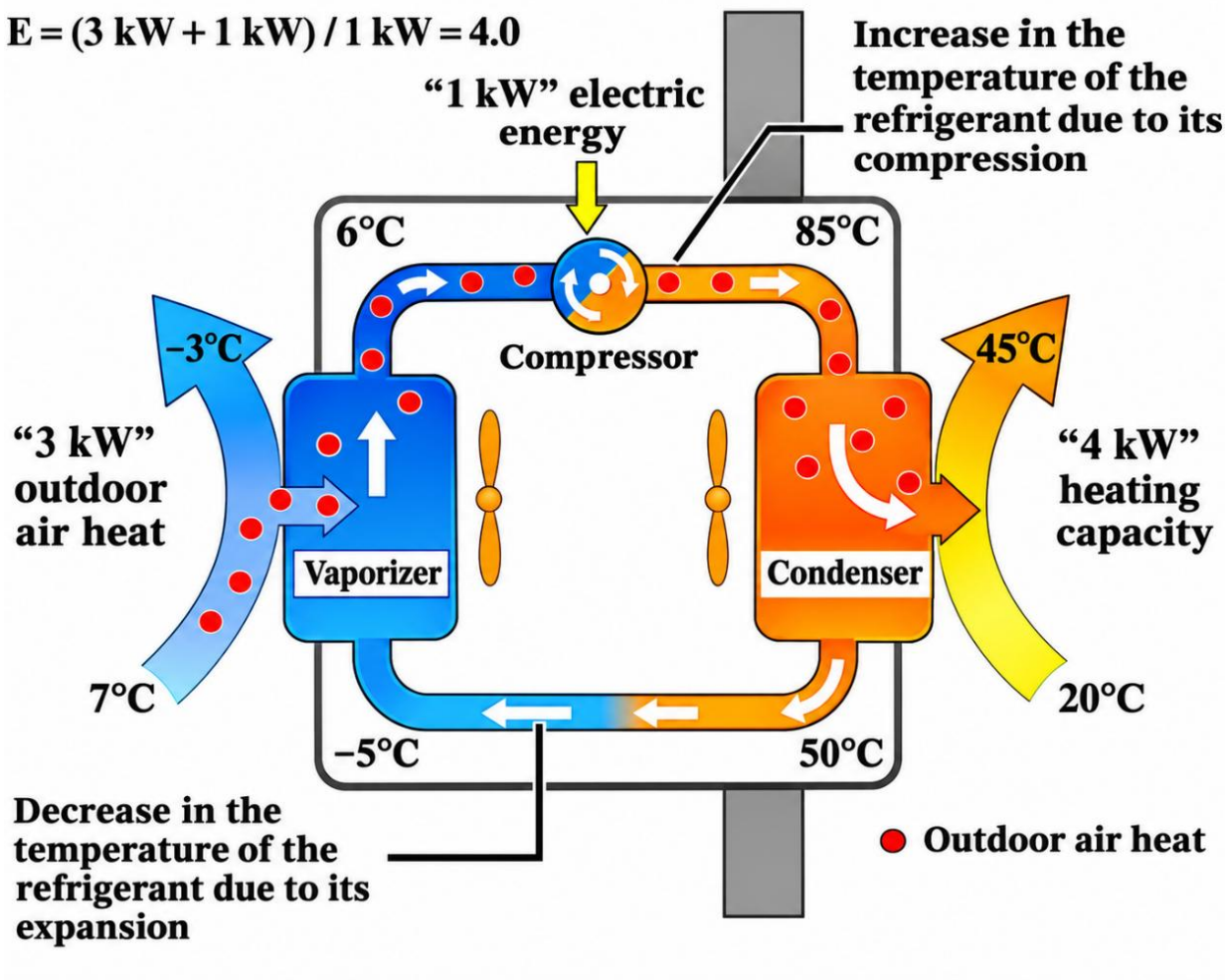


**Fig. 12.21. Determination of HP efficiency coefficient**

**Environmental friendliness.** The heat pump not only saves money, but also saves the environment – it does not burn fossil fuels. Therefore, there are no traces of sulfuric, nitric, phosphoric acids and benzene compounds on the ground around the house. The consumption of gas or coal for electricity production is reduced, while emissions of oxides such as $CO$, $CO_2$, $NO_x$, $SO_2$, and $PbO_2$ into the atmosphere are reduced. The chladons used in heat pumps do not contain carbon chloride and are ozone-safe.

**Versatility.** Heat pumps equipped with a reversible valve work for both heating and cooling. A heat pump can take heat from the indoor air, cooling it. In summer, excess heat can be used to heat domestic water.

**Safety.** Heat pumps are explosion and fireproof. During the heating process, there are no dangerous gases, open flames or harmful mixtures. Parts of the heat pump are not heated to high temperatures that can cause a fire. Stopping the heat pump will not cause it to break, you can safely use it after a long downtime. Freezing of liquids

in the compressor or other components is also excluded.

The disadvantages of heat pumps used for heating include the high cost of installed equipment and the inverse dependence of their efficiency on the temperature difference between the heat source and the consumer. Thus, the inverse dependence of the efficiency of using heat pumps on the temperature difference between the heat source and the consumer imposes certain restrictions on the use of air-to-water systems. The actual values of the transformation coefficient of modern heat pumps range from 2 at a source temperature of minus 20°C, and up to about 4 at a source temperature of plus 7°C. This leads to the fact that in order to ensure the set temperature regime of the consumer at low air temperatures, it is necessary to use equipment with significant excess capacity, which is associated with irrational use of capital investments (however, this also applies to any other sources of thermal energy). The solution to this problem is the use of a bivalent heating scheme, in which the main (basic) load is carried by a heat pump, and peak loads are covered by an auxiliary source (gas or electric boiler). The optimal capacity of the heat pump unit is from 60 to 70% of the required installed capacity, which also affects the purchase price of the heat pump heating unit. In this case, the heat pump provides at least 95% of the consumer's heat demand for the entire heating season. Under this scheme, the average seasonal energy conversion coefficient for the climatic conditions of Central Europe is at least 3.

**Questions for self-assessment:**

1. Who first proposed a prototype heat pump?
2. Specify the purpose of the heat pump.
3. What is the high-energy source?
4. What is meant by the concept of a low energy source?
5. What are considered natural sources of low-temperature energy?
6. What man-made sources of low-temperature energy do you know?
7. Which low-temperature energy sources have the highest energy level?
8. What sources of low-temperature heat of agricultural production do you know?
9. How do EU countries motivate the purchase of heat pumps?
10. Define the term "heat pump".
11. What is the principle of operation of a heat pump?
12. What are the main elements of a heat pump?
13. How are heat pumps classified according to their operating principle?
14. What is the difference between the principle of operation of a compression and absorption heat pump?
15. What effect does the principle of operation of a thermoelectric heat pump have?
16. How to determine the heat conversion factor of a heat pump?
17. What is a bivalent heating system?
18. Describe heating systems based on heat pumps using low-temperature heat sources of agricultural production.
19. Name the methods for selecting geothermal energy.
20. What are the advantages and disadvantages of using heat pumps?

**References:**


1. Atlas of the energy potential of renewable energy sources of Ukraine / ed. S. O. Kudrya. 3rd ed., updated. Kyiv : Institute of Renewable Energy of the NAS of Ukraine, 2024. 56 p.
2. Climate technology of the future: a magnet instead of a compressor. URL: http://www.tehnoclimate.com.ua/vse_novosti/novosti_kompanii/klimaticheskaya_tehnika_buduwego_magnit_vmesto_kompressora/ (date of access: 03.07.2019).
3. European Heat Pump Association. Market and statistics report. URL: http://www.ehpa.org/market-data/ (date of access: 11.09.2021).
4. Golub G. A. Heat pump in the heating system of residential buildings. *Mechanization and electrification of agriculture* : interdepartmental thematic scientific collection. 1991. Iss. 74. P. 51–53.
5. Golub G.A., Naumov S.Ye. Selection of a Heat Pump for a Residential Heating System. *Mechanization and electrification of agriculture* : interdepartmental thematic scientific collection. 1995. Iss. 81. P. 84–86.
6. Heat pumps » Heating with thermal energy from the environment / Conrad. 2023. 1 August. URL: https://www.conrad.com/en/guides/energy-transition/heat-pumps.html (date of access: 02.03.2023).
7. Heat pumps on the rise – time to move to system integration! URL: http://www.ehpa.org/about/news/article/heat-pumps-on-the-rise-time-to-move-to-system-integration (date of access: 24.12.2021).
8. Kukharets S. M., Golub G. A., Skydan O. V., Osypchuk O. Yu. Technical and technological proposals for obtaining energy from raw materials of agricultural origin. *Bulletin of Zhytomyr National Agroecological University*. 2015. No. 2 (50), Vol. 1. P. 369–385.
9. Milnes J. European heat pump market is on the rise. *ACHR News*. 2014. 22 December. URL: https://www.achrnews.com/articles/128393-european-heat-pump-market-is-on-the-rise (date of access: 12.12.2025).
10. Skydan O. V., Golub G. A., Kukharets S. M., Yarosh Y. D., Chuba V. V., Medvedskyi O. V., Tsyvenkova N. M., Sokolovskyi O. F., Kukharets V. V. Renewable energy in agricultural production : textbook. Kyiv ; Zhytomyr : NULES of Ukraine ; ZhNAEU, 2018. 338 p.
11. Snezhkin Yu. F. Energy-efficient heat pump technologies. State and prospects of their implementation in Ukraine. *Industrial Heat Engineering*. 2017. Vol. 39, No. 2. P. 18–24.
12. State Agency on Energy Efficiency and Energy Saving of Ukraine : official website. URL: https://saee.gov.ua/en (date of access: 13.12.2024).
13. Technologies and equipment for the use of renewable energy sources in agricultural production : manual / M. V. Prysiazhniuk et al. ; ed. by V. I. Kravchuk, V. O. Dubrovin. Doslidnytske : UkrNDIPVT named after L. Pohorilyi, 2010. 184 p. (Agricultural machinery – XXI).
14. The future of heat pumps : World Energy Outlook special report / International Energy Agency. Paris : IEA, 2022. URL: https://www.iea.org/reports/the-future-of-heat-pumps (date of access: 17.01.2026).

# 13. USE OF WIND ENERGY

**Lecture Plan:**


**13.1. Wind power potential** **324**
**13.2. Technical means of converting kinetic wind energy** **328**
**13.3. Efficiency of using wind turbines** **333**
**13.4. Environmental and economic aspects of wind farm use** **336**
**13.5. Atypical wind generator designs** **338**


## 13.1. Wind power potential

**Wind power** is a renewable energy industry that specializes in converting kinetic wind energy into electricity.

Wind as an energy source is an indirect form of solar energy, so it belongs to renewable energy sources. The Earth's atmosphere absorbs solar radiation unevenly, as the angle of incidence of sunlight on its surface varies, depending on the latitude and time of year. When heated, the air expands and rises up, forming directed flows of air masses. Where the air heats up more, these flows rise higher and concentrate in low-pressure zones, while colder air sinks lower, creating high-pressure zones. The difference in atmospheric pressure causes air to move from a high-pressure zone to a low-pressure zone at a proportional speed. In general, 1 to 2% of all solar energy coming to the surface is converted into wind energy.

Thus, the main factors determining atmospheric circulation on a global scale are the difference in air heating by the Sun between the equatorial and Polar Regions, which causes a difference in temperature and, accordingly, air density, and therefore the pressure difference, as well as the Coriolis Effect. To make the best use of wind energy, it is important to thoroughly understand diurnal and seasonal changes in wind direction and strength, changes in wind speed depending on altitude, the number of wind gusts over short periods of time, as well as statistics over several years.

The very first invention that uses wind energy is considered to be a sail. The first mention of a windmill in Europe, originally in France, dates back to the beginning of the XII century. These were mills with a horizontal axis of rotation.

In recent years, wind power has been increasingly used to generate electricity. High-power windmills are created and installed in areas where frequent and strong winds blow. The number and quality of wind turbines in the developed world is growing annually (fig. 13.1).

According to various estimates, the annual growth rate ranges from 25 to 50%. The significant pace of development of wind energy is explained by the fact that it is characterized by the lowest specific investment in comparison with other types of renewable energy sources. Today, wind power is used in more than 30 countries. The world leaders in the use of wind energy are China, the United States, Germany, and India (fig. 13.2).

In many countries, a new industry has emerged – wind power engineering. Obviously, wind power will continue to maintain its leading positions in the near future. This is indicated by the dynamics of growth in the capacity of wind farms in the

leading countries.

Therefore, during 2015, only China increased capacity by 48.5%, the United States – by 13.5%, and Germany – by 9.5%.

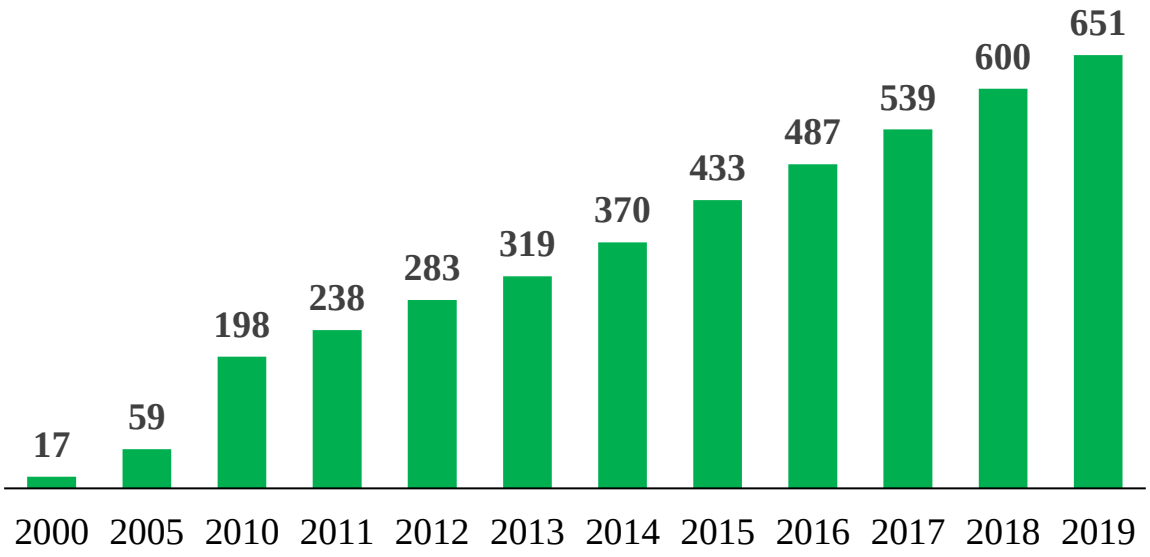


**Fig. 13.1. Dynamics of global wind power capacity [source: Global wind energy council. [Electronic resource] – Available at: http://www.gwec.net/]**

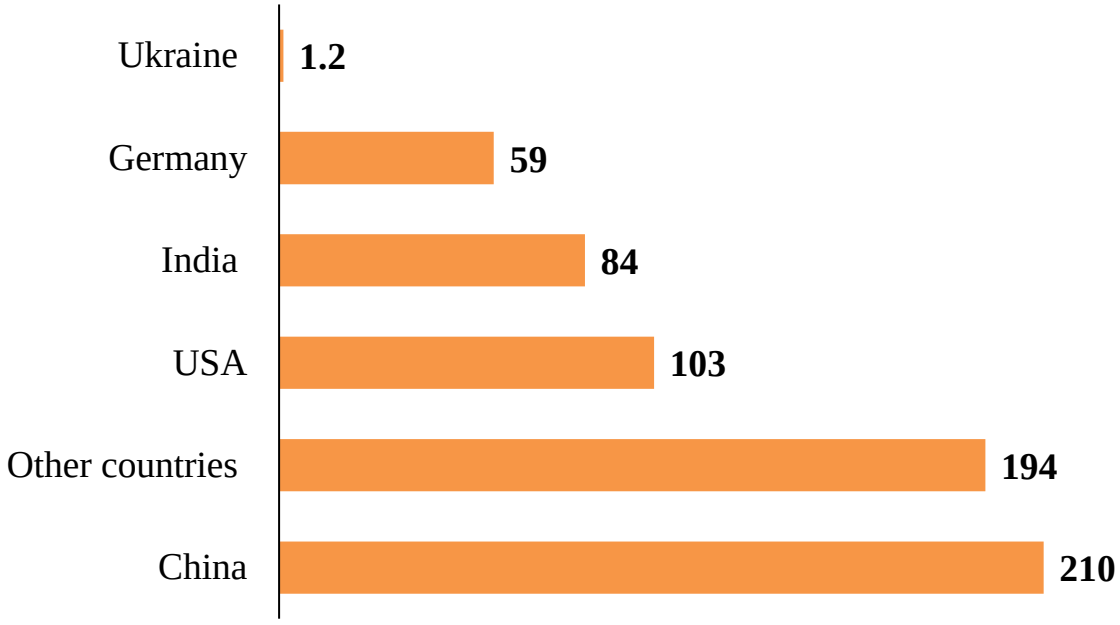


**Fig. 13.2. Installed wind power capacity of the world's leading countries as of the end of 2015 [source: Global wind energy council. [Electronic resource] – Available at: http://www.gwec.net/]**

The process of formation of Ukrainian wind power began in 1996, when the Novoazovsk wind farm with a design capacity of 50 MW was commissioned, and the Truskavets wind farm was launched in 1997. In 2000, there were already 134 wind turbines operating in Ukraine. A significant increase in the introduction of wind farms has been observed since 2009, when the Government of Ukraine introduced a "green"

tariff for renewable energy. As of the beginning of 2015 in Ukraine, the installed capacity of wind farms is 513.9 MW (including 87.8 MW in the temporarily occupied territory of the Autonomous Republic of Crimea), which is 0.93% of the total electricity generating capacity of the country and 46% of the capacity of renewable energy facilities (fig. 13.3). At the beginning of 2018, the capacity of wind farms in Ukraine increased to 505 MW, with 138 MW remaining in the occupied territory of Donetsk and Luhansk regions, and another 87.8 MW remaining in Crimea. And in 2019, the capacity of wind farms was already 1,170 MW. At the beginning of 2020, there is an agreement with the Norwegian company NBT, which will build the largest wind farm in Europe in Zaporizhzhia region with a total capacity of 792.5 MW (Zofiia project). This wind farm is planned to be launched in 2022.

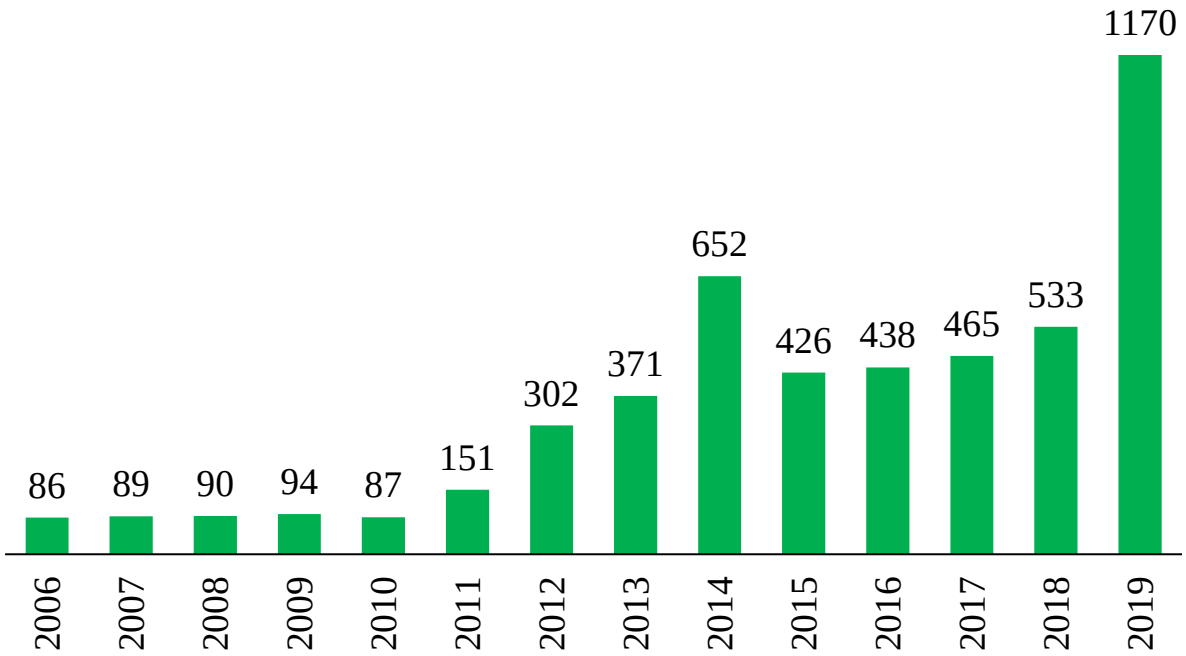


**Fig. 13.3. Dynamics of the development of wind power in Ukraine [source: State Agency for Energy Efficiency and Energy Saving of Ukraine. [Electronic resource] – Available at: http://saee.gov.ua/]**

The Institute of Renewable Energy of the National Academy of Sciences of Ukraine has compiled a map of the wind energy potential of our country (fig. 13.4). The most attractive regions for using wind energy are the coasts of the Black and Azov seas, the mountainous regions of the temporarily occupied Autonomous Republic of Crimea, the territory of the Carpathian Mountains, Odesa, Kherson and Mykolaiv regions. With increasing altitude, the kinetic energy of the air flow increases and, accordingly, the volume of electricity generated by wind farms increases as well.

According to experts of the Ukrainian Wind Energy Association (UWEA), about 7 thousand km$^2$ of the country's territory has wind power potential for large-scale wind power projects, where the wind develops an average speed of more than 5 m/sec. And for small-scale wind power, wind speeds from 4 to 4.5 m/sec are sufficient, covering significantly larger areas.

**The technical potential of wind energy in a region** is the total electrical energy

that can be obtained in the region from the use of the gross potential of wind energy ($W_B$) with the current level of development of technical means and compliance with environmental standards.

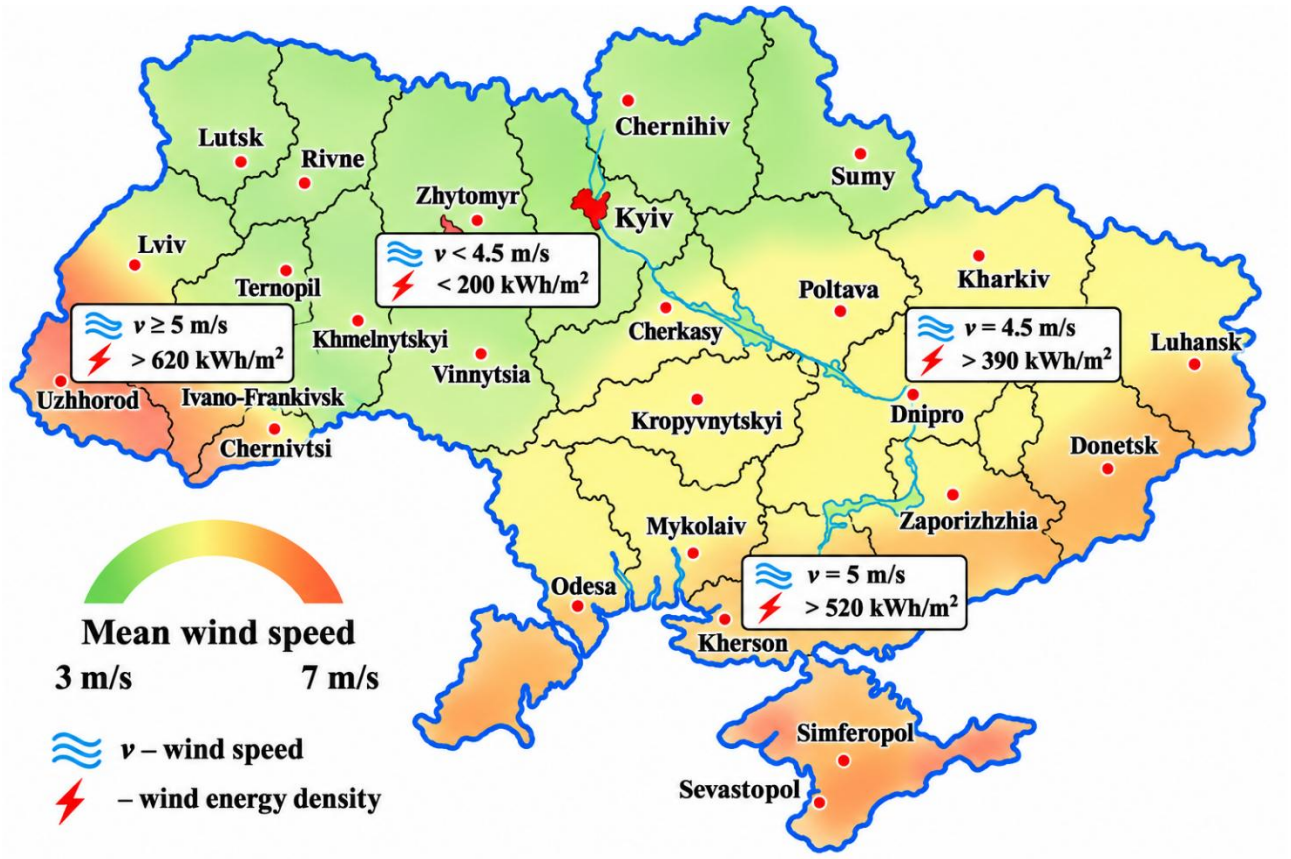


**Fig. 13.4. Technically feasible annual energy generation ( ) of wind farms in terms of the average wind speed ( ) at an altitude of 10 m in the corresponding region [source: Institute of Renewable Energy of the National Academy of Sciences of Ukraine. [Electronic resource] – Available at: http://www.ive.org.ua/]**

The technical potential depends on the parameters of the wind power plant, the average annual wind speed in the zone at the height of the crown, as well as the part of the area of the zone suitable for the construction of the plant, can be determined by the formula:

$$W_T = W_B c_P \eta_G \eta_M \frac{S_T}{S}, \quad (13.1)$$

where: $W_T$, $W_B$ – technical and gross potential of wind energy in the region, GJ; $c_P$ – wind energy utilization rate depends on the type of wind farm; $\eta_G$ = 0.9-0.98 – wind farm generator efficiency; $\eta_M$ = 0.7-0.85 – wind farm gearbox efficiency; $S_T$ – the area of the zone (region) where wind turbines can be placed, taking into account technical and environmental restrictions, is assumed to be at the level of 10 to 30% of the total area $S$ of the zone (region).

**The gross (theoretical) wind energy potential of a region** is the part of the average annual total wind energy that is available for use over the area of the region ($S$), determined by the formula:

$$W_B = E_B \frac{S}{20} = \frac{\rho T S}{20} \sum_{i=1}^{n} v_i^3 t_i, \quad (13.2)$$

where: $E_B$ – gross kinetic wind energy in the region, MJ; $\rho$ – air density, kg/m$^3$; $\upsilon_i$ – value of the $i$-th air flow velocity, m/s; $t_i$ – repeatability of the $i$-th air flow rate, sec; $T$ – duration of the year, s.

According to the Intersectional Scientific and Technical Center of Wind Energy of the National Academy of Sciences of Ukraine, the territory of our country has significant wind energy resources, which are estimated at 30 TWh/ year. The total wind potential of our country reaches between 16 and 24 kW of capacity (data from the World Wind Energy Association), which exceeds the current figures of the UK.

## 13.2. Technical means of converting kinetic wind energy

**Wind generator** is a device that converts kinetic wind energy into electrical energy. In general, a wind generator consists of a wind turbine (wind wheel), an electric generator, and auxiliary equipment.

By design, wind turbines are divided into devices with a horizontal and vertical axis of a wind turbine.

**Wind turbines with a horizontal axis** (parallel to the wind flow) of wind wheel rotation are the most common (fig. 13.5) due to the high value of the wind energy utilization factor ($c_P$=0.46–0.48) and relatively small dynamic loads.

**The wind energy utilization factor ($c_P$)** characterizes the ratio between the air energy behind the turbine and the kinetic energy of the air in front of the turbine, which, according to A. Betz's law (1919), cannot exceed the limit value – 0.593. The actual value of the $c_P$ coefficient is calculated using the formula:

$$c_P = \frac{1}{2v_1^3}(v_1 + v_2)(v_1^2 - v_2^2), \quad (13.3)$$

where: $\upsilon_1$ – oncoming air flow rate, m/s; $\upsilon_2$ – air flow rate behind the turbine, m/s.

Thus, there must be an optimal ratio of air flow rates in front of the rotor and with the rotor, at which the maximum conversion of wind energy into mechanical energy of rotation of the wind generator rotor occurs. It is established that the maximum efficiency of a wind generator is achieved when the air velocity behind the turbine is three times lower than the air velocity in front of the turbine ($\upsilon_2 = 1/3\upsilon_1$).

The power of a wind generator is determined by the formula:

$$P_B = \frac{1}{2}\rho\pi R^2 v^3 c_P \eta_G \eta_M, \quad (13.4)$$

where: $\upsilon$ – air flow rate, m/s; $R$ – wind turbine radius, m.

It is possible to increase the degree of use of wind energy by optimizing the profiles of the wind turbine blades, as a result of which the torque on the drive shaft of the generator drive transmission increases due to an increase in the lifting force of the blades.

Wind turbines with a horizontal axis have the following disadvantages:

– the need for an additional wind direction orientation device;

– the presence of a high mast (the minimum height must be twice the radius of the wind wheel).

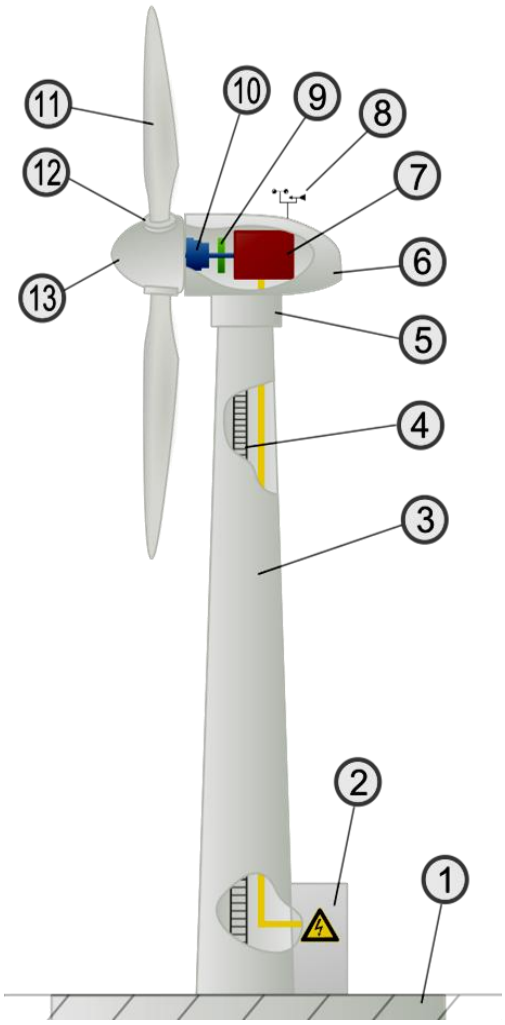


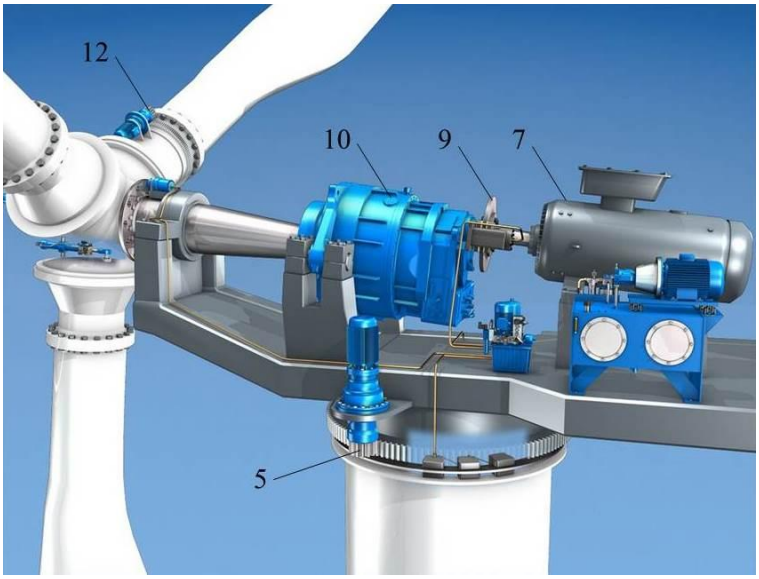


**1 – foundation; 2 – power cabinet; 3 – tower; 4 – stairs; 5 – rotary mechanism; 6 – gondola; 7 – electric generator; 8 – wind direction and speed control system; 9 – brake system; 10 – transmission; 11 – blades; 12 – angle of attack change system; 13 – rotor cap**

**Fig. 13.5. Structure of a wind generator with a horizontal turbine axis**

Compared to vertical-axial wind turbines, horizontal-axis wind turbines have the following advantages:

– possibility of self-start without an auxiliary drive by changing the angle of installation of the blades;

– higher value of the wind energy utilization factor;

– a higher value of the speed coefficient and, as a result, a higher speed of rotation of the rotor, which reduces the mass and overall performance of electromechanical equipment;

– eliminating the need for angular transmission of torque.

Devices with a horizontal axis also include so-called sail turbines, in which the blades are similar to sails. Such turbines are characterized by a significantly lower wind energy utilization rate, but can operate in low wind conditions, which is achieved by a significant area of installed blades.

**Wind turbines with a vertical axis** (perpendicular to the wind flow) of rotation of the rotor are effectively used in areas with frequent changes in wind direction. In

general, for a wind turbine, the following main types of rotors are used in practice as the active surface that perceives the energy of the wind flow (fig. 13.6): Savonius rotor; Darrieus turbine; orthogonal Darrieus H-rotor (Evans rotor); Darrieus helicoid rotor (Gorlov turbine).



**Savonius rotor** **Darrieus turbine** **H-rotor** **helicoid rotor**

**Fig. 13.6. Types of wind turbine rotors with vertical axis**

**The Savonius rotor** is named after its inventor, Finnish engineer Sigurd Savonius (1929). The rotor consists of a mast and, as a rule, two blades in the form of hollow semi-cylinders displaced relative to each other in such a way that they form a continuous convex-concave geometric shape. The principle of operation is based on the use of the difference in resistances that occur when the air flow simultaneously flows around the concave and convex surfaces of the rotor. Due to this it has a low wind energy utilization rate $c_P$=0.15-0.2.

The special feature of the rotor geometry is that it is always oriented to the wind, so it does not require additional orientation devices and is adapted to turbulence. The advantages of the rotor also include a large initial torque and a low initial air flow rate. Therefore, it is often used as a starting wind turbine for other types of vertical axial rotors.

In 1931, the French aircraft designer Georges Darrieus proposed his own design of a wind turbine with a vertical axis of rotation – **the Darrieus rotor**. The torque is formed due to the different resistance of the concave and convex parts of the rotor. Each of the wings is affected by a lifting force, the value of which depends on the angle between the vector of air flow velocity and the instantaneous speed of the wing. The maximum value of the lifting force is reached when the given vectors are orthogonal (perpendicular). Given that the instantaneous velocity vector of the wing changes cyclically during rotation, the moment of force generated by the rotor is also variable. The wind energy utilization rate is much higher and reaches a value of $c_P$=0.3-0.35.

The Darrieus two-bladed rotor cannot start rotating on its own, so either a generator in electric motor mode or a special motor (for example, the Savonius rotor) is used to start it. The need to have an independent power source to start the rotor

significantly reduces the possibility of spreading this type of wind generator. In the case of using three or more blades, the problem of self-starting the rotor is less noticeable. There are modifications of the rotor with a controlled angle of attack of the turbine blades, which simplifies its self-start.

The disadvantage of the Darrieus rotor design is high dynamic loads and noticeable noise. The Darrieus wind wheel is characterized by a high torque value due to the large geometric filling of the space between the wings, which is one of its indispensable advantages.

**The H-rotor (Evans rotor)** is a modified version of the Darrieus rotor. The torque on the drive shaft is created by the lifting force of two (maybe three or four) vertically arranged blades with an aerodynamic profile. To start the H-rotor, an external spin is also required, and to stop, it is enough to turn the blades 90° around their vertical axes.

Due to the smaller surface area covered, the H-rotor has a slightly lower wind energy utilization rate ($c_P$=0.3) compared to the Darrieus rotor, but is higher than for the Savonius rotor.

**The helicoid rotor (Gorlov turbine)** is the most advanced modification of the Darrieus rotor, the design of which solves the main problem of orthogonal rotors – uneven rotation. This is achieved by using spiral blades that are made in the shape of an airplane wing, so the rotor rotates only in one direction. The advantage of the helicoid rotor is significantly lower dynamic loads on the support units of the drive shaft. Due to the spiral shape of the blades, the turbine rotation speed is twice as high as the air flow rate. As a result, the wind energy utilization rate increases, which is the highest among all types of vertical-axial rotors ($c_P$=0.4). The disadvantages of a helicoid rotor include the complexity of manufacturing spiral blades and, as a result, their significant cost.

Among vertical wind turbines of the carousel type, the most common is the Musgrove rotor. The torque of the two-bladed rotor is created by lifting force. The blades have an aerodynamic profile and are positioned vertically at the initial starting moment, i.e. parallel to the axis of rotation (fig. 13.7, a). As the wind speed increases, the rotation speed also increases, so due to the action of centrifugal forces, the blades begin to fold, which leads to a decrease in the covered area. At the maximum estimated wind speed, the wind wheel stops because the blades are fully folded (fig. 13.7, b, c).

Like all types of Darrieus rotors, the Musgrove rotor must be given an initial torque to start.

The power generated by a wind power plant with a vertical-axial rotor is determined by the formula:

$$P_H = \frac{1}{2}\rho A_0 v^3 c_P \eta_G \eta_M, \quad (13.5)$$

where: $A_0$ – area of the surface circumferential by the rotor blades, m$^2$.

For the H-rotor, the area of the rotor bypass surface is determined by the formula:

$$A_0 = 2HR, \quad (13.6)$$

where: $H$ – blade height, m; $R$ – radius of the blade trajectory, m.

Since there is an additional counter-resistance to rotation for vertical-axial rotors, the wind energy utilization factor is determined as follows:

$$c_P = 2c_X\left(1 - \frac{v_2}{v_1}\right)^2 \frac{v_2}{v_1}, \quad (13.7)$$

where: $v_1$ – oncoming air flow rate, m/s; $v_2$ – the speed of the air flow behind the turbine, and $v_2 = 1/3v_1$, m/s; $c_X = 0.65$– rotor resistance coefficient, accepted.

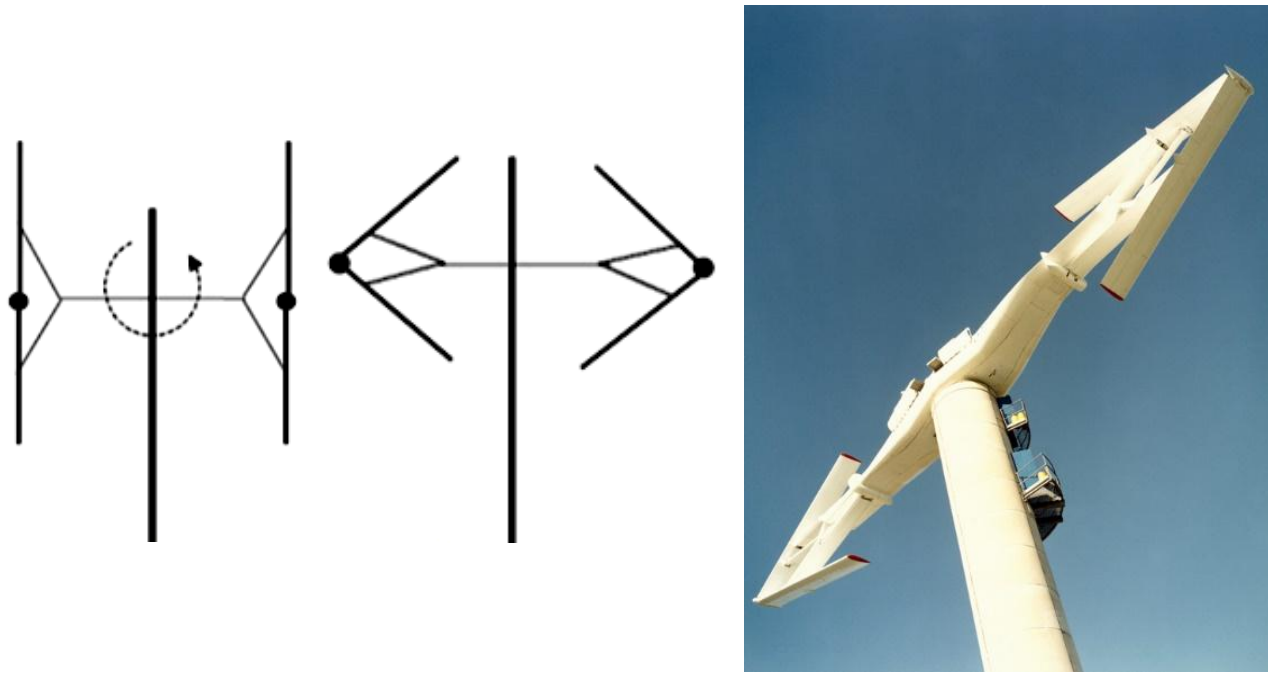

***a*** ***b*** ***c***

***a* – the blades are parallel to the axis; *b* – the blades are folded; *c* – general view**

**Fig. 13.7. Wind generator with Musgrove rotor**

Orthogonal vertical-axial wind turbines, in comparison with horizontal-axial propeller wind turbines, have the following advantages:

– independence of operation from the direction of wind flow, which eliminates the need to orient the wind turbine in this direction;

– the ability to place electromechanical equipment at the base of the support, which reduces the requirements for its strength and rigidity, simplifies maintenance and repair;

– the ability to attach the blades to the rotor in several places, which reduces the requirements for the strength and rigidity of the blade;

– less than the value of the circumferential speed of the blade with a lower value of the speed coefficient;

– relative ease of manufacturing the blades of most types of rotors.

The disadvantages of vertical-axial wind turbines include:

– much greater susceptibility to tedious destruction, due to fairly frequent self-oscillating processes;

– torque ripple, which leads to ripple of power and other generator parameters;

– the power limit is up to 5 MW for wind turbines with rotors of Darrieus and H-rotor types due to significant overload of the main shaft thrust bearing. This disadvantage limits the growth of the power of vertical-axial wind turbines, although low-power wind turbines are successfully operated;

– lower wind power utilization rate.

Only Darrieus rotors can compete with the best horizontal-axial wind turbines today. They are relatively simple in design, do not require additional wind orientation mechanisms and limit the developed power at speeds that exceed the calculated ones. In addition, when using such wind turbines to work in power systems, the problem of creating megawatt-class machines is easier to solve.

### 13.3. Efficiency of using wind turbines

The speed of a wind generator, along with the wind energy utilization rate, is the most important parameter that determines the main design solutions for wind turbines. The speed coefficient ($Z$) depends on the diameter of the wind turbine, its rotation speed and air flow rate, and is determined by the formula:

$$Z = \frac{Rw}{v_1} \approx \frac{4\pi}{N} \quad (13.8)$$

where: $v_1$ – oncoming air flow rate, m/s; $N$ – number of blades, units; $\omega$ – angular velocity of the wind turbine, $s^{-1}$.

Therefore, the condition for the maximum possible "removal" of wind energy is to maintain the $c_P$ coefficient in the zone of the highest value, i.e. it is necessary to ensure constant speed values. According to the dependence (13.8), when the wind speed ($v_1$) decreases, it is necessary to reduce the speed of the wind wheel ($\omega$) and vice versa.

Depending on the value of the speed coefficient, wind engines are divided into:

– low-speed, with a speed coefficient $Z$<1.5, they have a rotor with a large number of blades (from 12 to 40) and are characterized by a large starting torque;

– medium-speed, the speed coefficient of which is in the range from 1.5 to 3.5, the wind wheel has from 4 to 7 blades;

– high-speed rotors, which have a speed coefficient higher than 3.5, are made in the form of an aircraft propeller with three, two or one blade, characterized by a small starting torque.

The relationship between the wind energy utilization factor ($c_p$) and speed ($Z$) allows drawing a fairly unambiguous conclusion about the capabilities of wind wheels of various designs in terms of wind energy efficiency (fig. 13.8).

In the operation of a wind turbine two limit modes can be distinguished:

– a mode with a constant speed factor $Z$ and, consequently, with a constant wind energy utilization factor $c_P$;

– a mode with a constant speed of rotation of the wind wheel and, consequently, with a variable coefficient $c_P$.

If the wind speed exceeds a certain nominal value, the power limiting factor begins to act, so the wind turbine must be forcibly entered into the $\boldsymbol{c_P}$ reduction mode. That is why most modern wind turbines prefer wind wheels with variable rotation speed in a fairly wide range.

There are three main principles of efficient implementation of wind farms that form the following schemes: parallel operation with the grid; autonomous operation; direct conversion of electrical energy into heat.

**Parallel work with the grid.** In this case, the electrical energy generated by the wind farm must meet the quality requirements of electrical energy in the grid. The grid, in turn, should be able to receive power from wind farms (power transmission line capacity, availability of appropriate electricity meters, etc.) and respond in time to changes in its quantity (fig. 13.9).

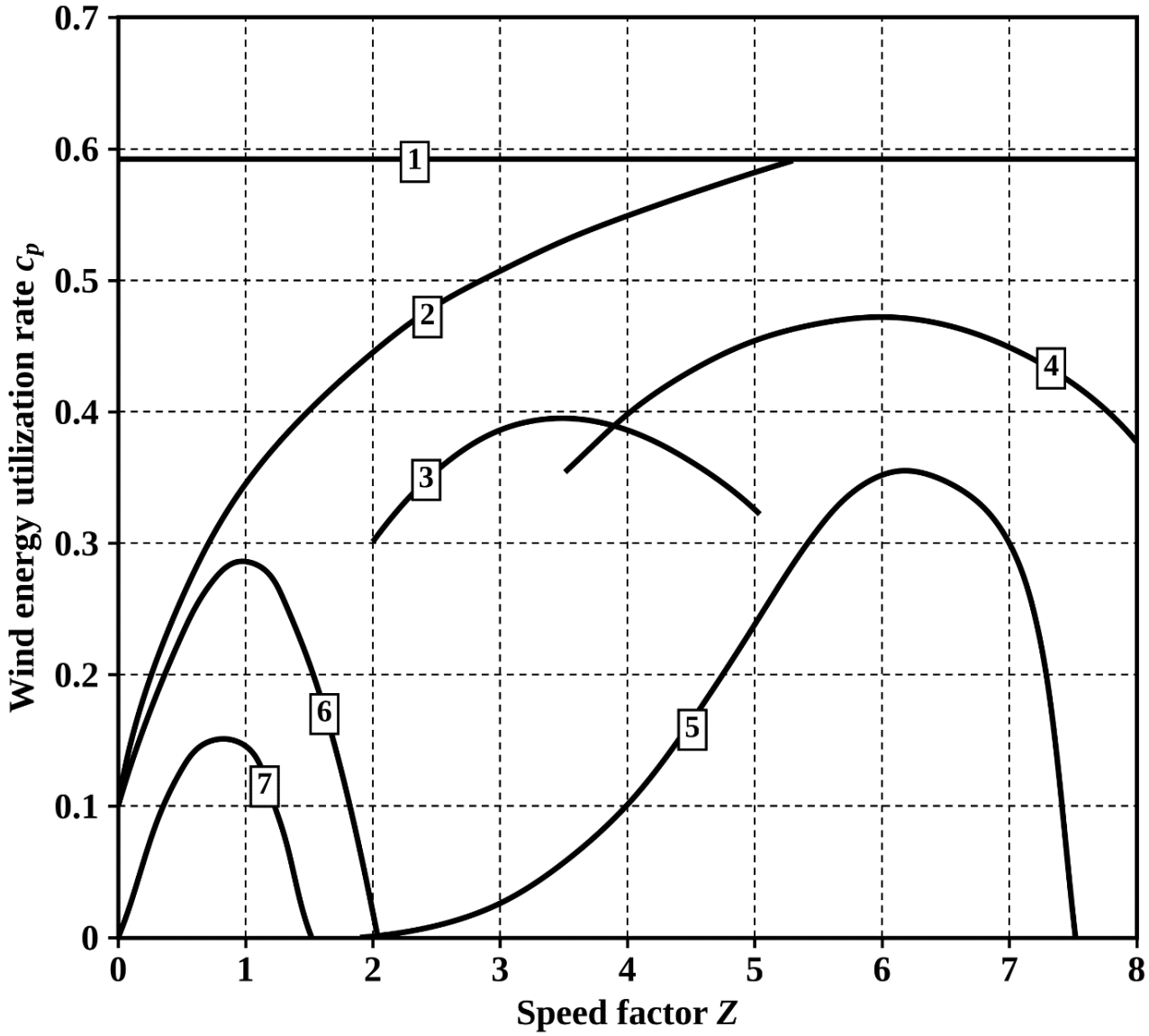


**1 – Betz criterion; 2 – Glauert criterion (ideal propeller); 3 – three-bladed wind wheel; 4 – two-bladed wind wheel; 5 – Darrieus rotor; 6 – multi-bladed wind wheel; 7 – Savonius rotor.**

**Fig. 13.8. Dependence of the wind energy utilization coefficient ($c_p$) on the speed coefficient ($Z$) (according to G. Pivnyak et al.)**

The wind generator converts the mechanical energy of air flows into electrical energy, generating an alternating electric current. The controller is designed to convert alternating electric current to direct current, and the inverter provides conversion of direct current to alternating industrial frequency (50 Hz) and voltage (220/380 V) supplied by the grid to the consumer. In conditions of an excess of generated electricity, the grid inverter allows supplying it to the grid, and in the absence of wind, using the

energy of the power grid. Mode switching is performed automatically. Control of output and consumption is taken into account by special metering devices (electric meter). According to this scheme, the most rapidly growing stations operate that allow selling electricity to the grid at a "green" tariff.

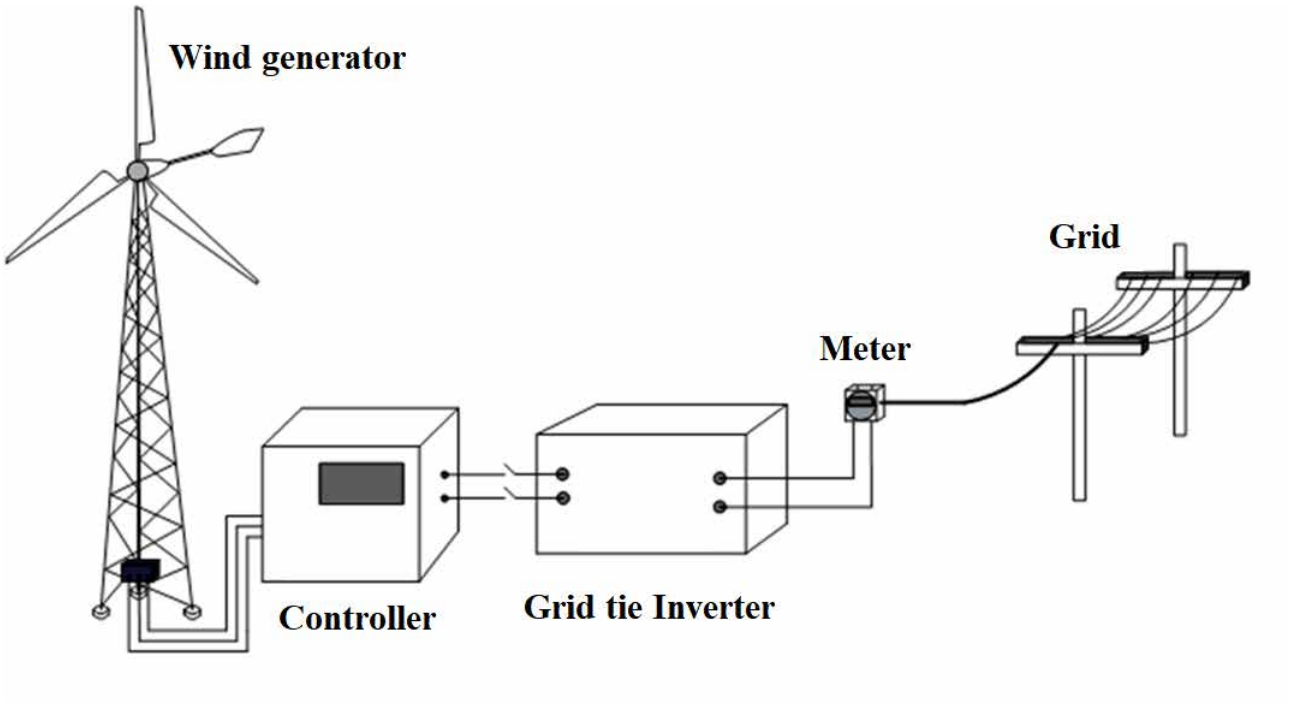


**Fig. 13.9. Parallel operation diagram of a wind generator**

**Autonomous operation of wind farms** involves the installation of rechargeable batteries, which are designed to store electrical energy generated by the wind generator under favorable weather conditions. The availability of batteries significantly increases the overall cost of the system. It is most advisable to install an autonomous system in combination with a photovoltaic module (fig. 13.10).

A wind generator with electricity storage in batteries can operate in parallel with the grid. Parallel operation is performed using the ARI (automatic reserve input) device. ARI allows switching the power supply of the object in the absence of wind and full discharge of batteries to the power grid, or vice versa, switches the load to the batteries when power is lost from the power grid.

Wind-solar (hybrid) power supply systems are particularly effective for year-round autonomous power supply. These systems are stations based on wind turbines and photovoltaic modules connected to a single power system. The performance of photovoltaic batteries is quite high in summer and relatively low in winter. In turn, providing electricity obtained from wind energy in the summer is problematic due to frequent windless days. Therefore, the advantages of the wind-sun hybrid system become obvious.

**Direct conversion of electrical energy into heat.** The electrical energy generated by the wind farm is converted into heat by heating the volume of water with electric heaters. That is, the heat accumulator is water. This scheme can be used for preheating water in a hot water supply system. The main disadvantage is the instability and unregulated wind flow.

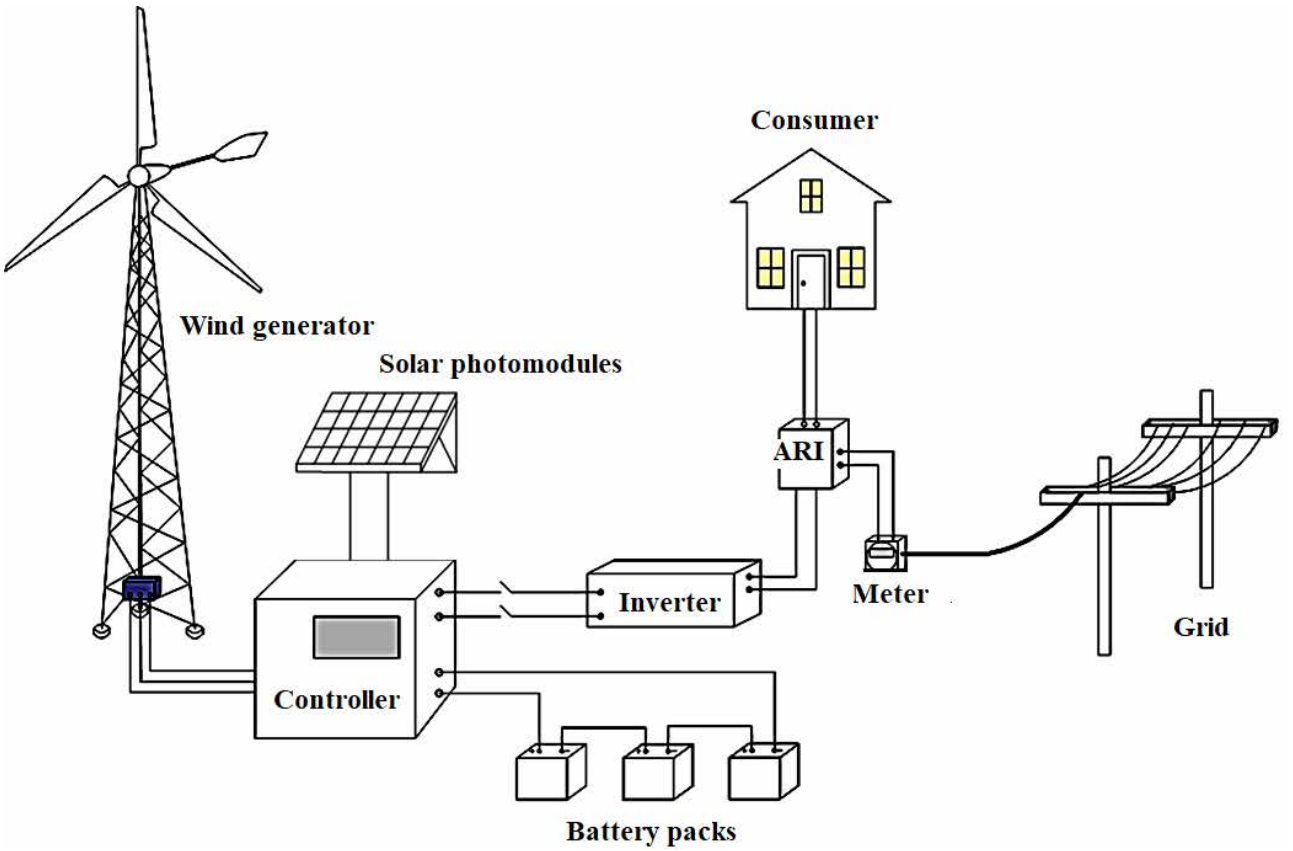


**Fig. 13.10. Scheme of combined operation of a wind generator**

The choice of a particular system depends on the specific operating conditions and the tasks for which it is intended. As a rule, they try to maximize the production of electric energy throughout the year in order to reduce, for example, fuel consumption by thermal power plants of a single power system, or they strive to ensure the production of the necessary minimum of electric energy, even in low winds, in order, for example, to maintain the operability of water supply pumps.

### 13.4. Environmental and economic aspects of wind farm use

The opinion that the production of electricity from renewable sources belongs to environmentally friendly methods is not fully true. These energy sources have a fundamentally different range of environmental impacts compared to traditional power plants. Certain types of environmental impacts of non-traditional and renewable energy sources on the environment have not been sufficiently studied to date, especially in time terms, and therefore require detailed study.

In general, wind energy allows reducing the degree of impact on the environment:

– there is no need to build mines (coal production), drill wells (natural gas and oil production), lay pipelines, etc.;

– there is no pollution caused by carbon dioxide, heavy metals and other harmful substances as a result of burning fossil fuels;

– no thermal contamination (discharge of warm water from the cooling system of nuclear and thermal power plants);

– there is no need to change the ecosystem by flooding large areas, changing the direction of river flows, etc.

The operation of a wind generator with a capacity of 1 MW for 20 years can save approximately 29 thousand tons of coal or 92 thousand barrels of oil. The use of one such generator annually "cleans" the atmosphere of 1,800 tons of $CO_2$, 9 tons of $SO_2$ and 4 tons of nitrogen oxides. According to expert estimates, by 2050, global wind power will reduce annual air pollution with carbon dioxide by 1.5 billion tons.

It should be borne in mind that wind power has a local impact on the environment. This means that no emergency situations at a wind farm can lead to the death of a significant number of people, so they do not have catastrophic consequences, unlike nuclear power plants and hydroelectric power plants with high dams.

The main negative factors of wind power's impact on the environment are the following:

– soil erosion that occurs during the construction of the wind turbine foundation, construction and installation works, and road construction;

– visual intrusion into the landscape causes wildlife advocates to resist changing the natural landscape;

– threat of bird death – physical impact of wind farms in contact with turbines, blades and towers, habitat disturbance, violation of the bird migration route;

– acoustic and sound noise during the operation of wind power plants, especially harmful is infrasound radiation;

– negative impact on the operation of TV, radio and navigation devices caused by the reflection of electromagnetic waves by wind turbine blades, which affects the quality of television and radio broadcasts, as well as the operability of various navigation systems in the area of several kilometers around the place where the wind fleet of wind farms is located;

– obstacles to air transport, similar to tall buildings and structures, which causes the need to map wind turbine locations.

The cost of electricity produced at wind farms depends primarily on its volume, which in turn is determined by the average annual wind speed, maintenance and operation costs, the service life of the wind turbine, the loan rate, and also depends on the amount of capital investment. So, according to the United States, the cost of electric energy of wind farms ranges from 4.8 to 4.9 cents/kWh at a wind speed of 7 m/sec, from 3.6 to 3.7 cents/kWh at a wind speed of 8 m/se and from 2.5 to 2.6 cents/kWh at a wind speed of 9.5 m/sec, while the cost of electricity produced at coal-fired power plants ranges from 4.5 to 6 cents/kWh.

Consequently, the performance of a wind farm depends on the strength of the wind, a factor that is highly variable. Accordingly, the supply of electricity generated by the wind generator to the power system is very uneven both in the daily, weekly, monthly, annual and multi-year sections. Given that the power system itself has load heterogeneities (peaks and dips in energy consumption), which the wind power industry, of course, cannot regulate, the introduction of a significant share of wind power into the power system contributes to its destabilization.

This feature of wind power significantly increases the cost of electricity

generated. Problems in the networks and dispatching of power systems due to the instability of wind farms already begin when a share of 20-25% of the total installed capacity of the power system is reached.

It should be noted as a positive factor that unit capital expenditures and the cost of electricity production at wind farms have significantly decreased over the past 25 years from 4,000 to 1,000 US dollars/kW of wind generator power.

It is considered that the use of wind turbines in everyday life to provide electricity to domestic consumers is not sufficiently appropriate for the following reasons:

– the need for converters and synchronizers with the external network, which cost approximately 50% of the cost of the entire installation;

– the need for additional equipment (for example, a gasoline or diesel generator), to ensure uninterrupted power supply in the event of unstable wind or in the absence of an external power grid, and batteries, the cost of which can reach 25% of the cost of wind turbines.

It should be noted that when the unit capacity of wind turbines increases, the unit cost of installed wind farm capacity usually decreases. Therefore, wind power remains the most environmentally friendly and economically justified technology for using renewable sources.

### 13.5. Atypical wind generator designs

Some researchers point out the limited possibilities for further improvement of horizontal-axial wind turbines, despite the fact that vertical-axial wind turbines have a greater design diversity. But taking into account the possible dangers of rotating parts of wind turbines, there is still a search for appropriate designs of wind kinetic energy converters in the direction of reducing man-made pressure on the environment and the human environment.

***RESA* Company** has introduced a wind turbine, which has many differences from traditional turbines, one of which is a significant number of blades forming a conical surface (fig. 13.11). The new turbine is capable of operating even at low speed air flow.

The biggest achievement of the company was that the wind generator does not emit much noise and vibrations during operation, and generates energy 30% more efficiently than its competitors. The noiselessness of the wind generator is indicated by its own name – Eco Whisper Turbine, which literally translates as "ecological whisper turbine".

The windmill is 6.5 m in diameter, has 30 blades made of aluminum, the mast height is 21.1 m, and the power is approximately 20 kW. According to the developers, the new turbine can withstand wind speeds of up to 220 km/h, and in extreme weather conditions, it can be folded.

The INVELOX system is based on the following idea: wide-open sockets capture the wind and transmit it to the turbine, which is located at ground level. Before entering the wind turbine, the wind in the guide channels increases its speed four times (from 10 mph to 40 mph). In addition, *SheerWind* claims that the system can generate

electricity at wind speeds of 1 mph (0.45 m/sec).



**Fig. 13.11. Eco Whisper Turbine wind generator**

***SheerWind* Company** from the city of Chaska (USA) claims that the INVELOX wind generator created by them is capable of generating six times more electricity than conventional wind turbines (fig. 13.12).




**Fig. 13.12. INVELOX wind generator**

***Saphon Energy*** specialists have created a bladeless wind generator (fig. 13.13). The wind generator does not have rotating blades and elements. The appearance of the new wind generator resembles a household TV satellite dish – a concave dish. The dish turns to the wind (using the shank) and uses the sail effect. The entire area of the dish perceives the pressure of the wind flow and converts the wind force into mechanical (reciprocating) motion.



**Fig. 13.13. *Saphon Energy* wind generator**

The round "sail" of the wind generator is stretched on a round frame that picks up the wind. Due to the use of air valves, the sail performs an oscillatory movement under the influence of wind. With the help of the traction system, the force is transmitted to the pistons of the hydraulic system, which converts the energy of mechanical vibrations into high-pressure hydraulic fluid. The hydraulic fluid gives its stored energy to the electric generator.

The design of the wind generator does not include complex mechanical gears, gearboxes and other devices that are used in traditional wind farms. The absence of rotating components and mechanisms increases the reliability of the entire structure

and safety for birds. The prototype has a diameter of 1.2 m and a generated power of 0.5 kW.

An interesting engineering solution is the creation of a "flying" wind generator in the United States (fig. 13.14), as the higher is the height at which the windmill is located, the greater is the speed and stability of the wind, accordingly more electricity can be obtained.



**Fig. 13.14. World's Highest Wind Turbine [source: IEEE Spectrum. [Electronic resource]. – Available at: https://spectrum.ieee.org/first-commercial-floating-wind-turbine-hovers-above-alaska]**

The Dutch company Mecanoo has developed an electrostatic wind generator that does not have blades and moving parts. As a source and storage of energy, water droplets coming out of horizontally placed nozzles are used here. Water droplets are positively charged and, under normal conditions, are attracted to negatively charged electrons or surfaces. But with the help of wind, the droplets relate to electrodes of a similar charge, which leads to an increase in potential energy. The generator has a frame inside which there are insulated tubes. Each tube has nozzles and several electrodes. The amount of energy produced depends on the number of water droplets, the charge of the droplets, the wind speed, and the strength of the electric field (fig. 13.15).

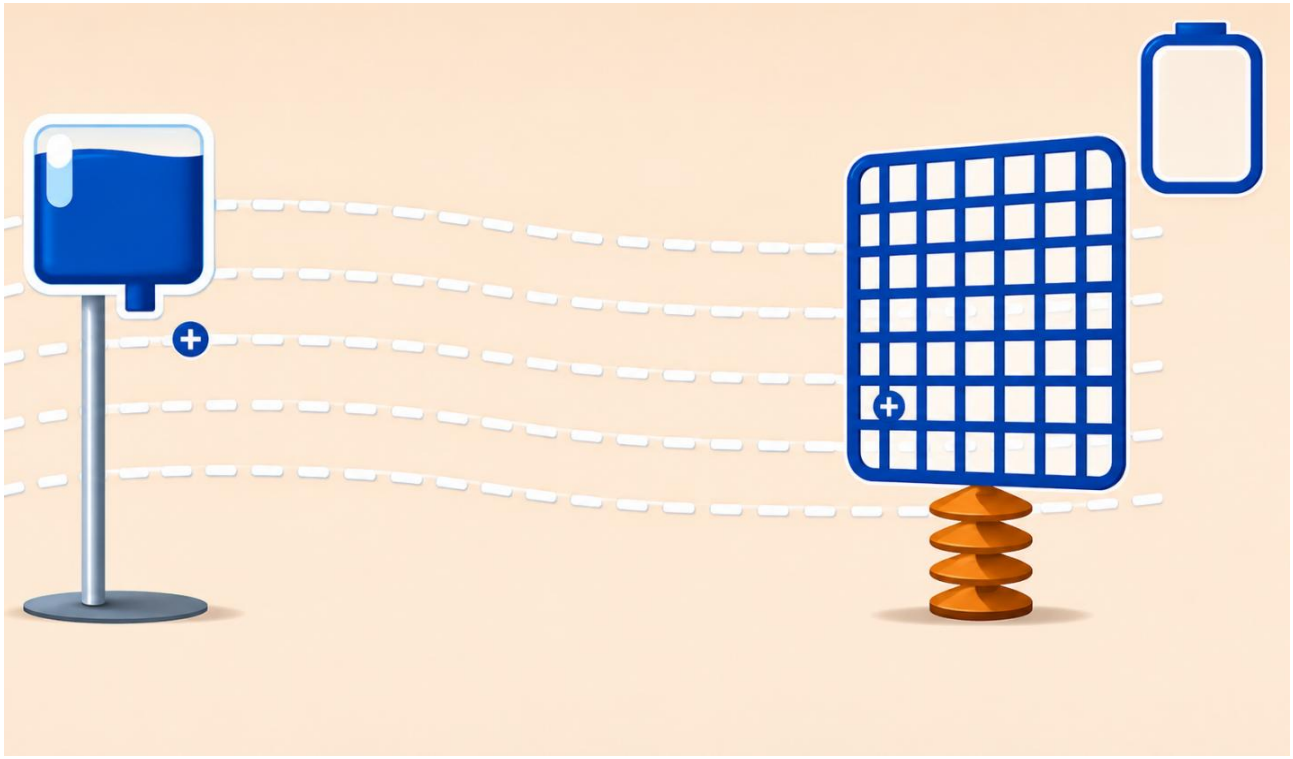

**Fig. 13.15. Operating principle of an electrostatic wind generator**

Only one device works on this principle (fig. 13.16), which is located on the territory of the university that developed the technology, in the city of Delft.



**Fig. 13.16. Electrostatic wind generator in Delft**

The continuous generation of new ideas for fundamentally new wind energy storage devices is caused by the fact that wind power is the most dynamic renewable energy industry in the world.

**Questions for self-assessment:**

1. What branch of energy does wind power belong to?
2. What is the driving force behind the movement of air masses?
3. Name a country among the leaders in implementing wind power plants.
4. What year is considered the beginning of the emergence of the wind energy industry in Ukraine?
5. What is the technical potential of wind energy in the region?
6. What is the gross wind energy potential of a region?
7. What is meant by the term wind generator?
8. What characterizes the wind energy utilization rate ($c_p$)?
9. What are the ways to increase the use of wind energy by a wind generator?
10. What is the optimal ratio between the air flow rates in front of the rotor and behind it?
11. What are the main disadvantages of horizontal-axial wind turbines?
12. What are the advantages of horizontal-axial wind turbines over vertical-axial ones?
13. Name the main types of rotors of vertical-axial wind turbines.
14. What is the special feature of the Savonius rotor geometry?
15. Specify the wind energy utilization factor of the Savonius rotor.
16. What type of wings does Darrieus rotor have?
17. What is the main disadvantage of the Darrieus rotor design?
18. What are the advantages of the Darrieus rotor?
19. Why does the H-rotor have a lower wind energy utilization rate compared to the Darrieus rotor?
20. What is the difference between a helicoid rotor and an H-rotor?
21. What are the advantages of a helicoid rotor?
22. What are the disadvantages of a helicoid rotor?
23. Name the most common carousel-type rotor, describe its design and operational features.
24. Indicate the advantages of orthogonal wind turbines over horizontal-axial ones.
25. What does the value of the wind generator speed coefficient depend on?
26. How are wind generator sets classified according to such an indicator as speed?
27. What are the two limit modes that can be distinguished in the operation of a wind generator set?
28. What are the most common schemes for using wind farms?
29. What do you think is one of the positive aspects of using wind power?
30. What are the main negative factors of wind power plants' impact on the environment?
31. What types of atypical wind turbine designs can you name?

32. Describe the design of the "flying" wind generator.

33. What is the main feature of the "flying" wind generator?

34. How does an electrostatic wind generator that does not have blades and moving parts work?

35. What is the main feature of the electrostatic wind generator?

**References:**


1. Ewicon – the world's first blade-less wind turbine. URL: http://wonderfulengineering.com/ewicon-the-worlds-first-blade-less-wind-turbine/ (date of access: 03.03.2024).

2. Global Wind Energy Council : official website. URL: http://gwec.net/ (date of access: 11.07.2025).

3. Institute of Renewable Energy of the National Academy of Sciences of Ukraine : official website. URL: http://www.ive.org.ua/ (date of access: 01.05.2026).

4. Kang C., Yang X., Wang Y. Turbulent flow characteristics and dynamics response of a vertical-axis spiral rotor. *Energies*. 2013. Vol. 6, No. 6. P. 2741–2758.

5. Kudrya S. O. Potential for the use of renewable energy sources. Experience of developed countries in the development of renewable energy. URL: http://www.ive.org.ua/ (date of access:11.11.2022).

6. Pivnyak G. G., Shkrabets F. P., Neuberger N., Tsyplenkov D. Fundamentals of wind energy : textbook. Dnipropetrovsk : NMU, 2015. 335 p.

7. REmap 2030: renewable energy prospects for Ukraine / D. Gielen, D. Saygin, N. Wagner ; IRENA. Abu Dhabi : IRENA, 2015. URL: https://www.irena.org/Publications/2015/Apr/Renewable-Energy-Prospects-for-Ukraine (date of access: 13.12.2022).

8. Renewable energy capacity statistics 2015 / O. Lavagne d'Ortigue, A. Whiteman, S. Elsayed ; IRENA. Abu Dhabi : IRENA, 2015. URL: https://irena.org/publications/2015/Jun/Renewable-Energy-Capacity-Statistics-2015 (date of access: 13.12.2021).

9. Skydan O. V., Golub G. A., Kukharets S. M., Yarosh Y. D., Chuba V. V., Medvedskyi O. V., Tsyvenkova N. M., Sokolovskyi O. F., Kukharets V. V. Renewable energy in agricultural production : textbook. Kyiv ; Zhytomyr : NULES of Ukraine ; ZhNAEU, 2018. 320 p.

10. State Agency on Energy Efficiency and Energy Saving of Ukraine : official website. URL: http://saee.gov.ua/ (date of access: 05.06.2025).

11. Ten impressive wind turbines of the future. URL: http://navkolonas.com/archives/1098 (date of access: 22.05.2025).

12. Wind energy of Ukraine. URL: http://www.uwea.com.ua/ (date of access: 18.11.2025).

13. Renewable energy in agriculture / G. A. Golub, O. V. Skydan, S. M. Kukharets, N. M. Tsyvenkova, O. A. Marus, Y. D. Yarosh, V. V. Chuba, M. Yu. Pavlenko ; ed. by G. A. Golub, O. V. Skydan. Kyiv ; Zhytomyr : NULES of Ukraine ; Polissia University, 2023. 400 p.

# 14. SOLAR ENERGY

**Lecture Plan:**


**14.1. General characteristics of solar energy 345**
**14.2. Solar thermal energy 350**
**14.3. Photovoltaic 357**
**14.4. Solar PV power plants developed for University of Castilla-La Mancha 367**
**14.5. Agrivoltaic 369**


## 14.1. General characteristics of solar energy

The sun is the most powerful source of energy, exceeding the capacity of the Earth's energy reserves by a hundred thousand times. The amount of energy coming from the sun exceeds ten thousand times the amount of energy produced on the entire Earth. Fig. 14.1 schematically shows the distribution of the sun's radiant energy reaching the Earth's atmosphere.

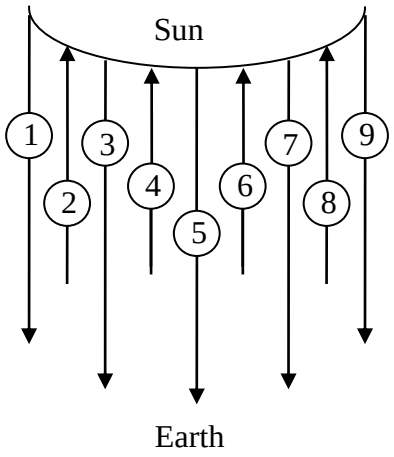


**Fig. 14.1. Distribution of the sun's radiant energy**

The radiant energy of the sun reaching our atmosphere is divided into nine parts: 1 – converted into wind energy (2.5%); 2 – reflected by the atmosphere (7%); 3 – converted into energy of sea currents (0.4%); 4 – reflected by clouds (27%); 5 – falling on the ocean surface (33%); 6 – reflected from the Earth (7%); 7 – falling on the land surface (15%); 8 – reducing the thermal radiation of the Earth; 9 – absorbed by plants (0.12%).

Most of the solar energy that hits Earth is converted into the energy of photosynthetic products, which are the main source of thermal and muscular energy of living organisms. The plant world and its waste during combustion are converted into thermal energy, and the waste of the plant and animal world after fermentation can be converted into combustible gases (methane, hydrogen sulfide, etc.) and organic fertilizers, the energy of which will later again be transferred to the energy of plant

products. This part of solar energy is one of the most important, because thanks to it, the physiological processes of all living organisms take place, which is important for growing agricultural products. During photosynthesis, only 1 to 2% of solar energy is converted to chemical energy.

The root cause of solar radiation energy is the reaction of thermonuclear fusion of light elements in the depths of the planet. In turn, energy reaching the Earth in the amount of approximately 1.35 kW/m$^2$ is the cause of most renewable energy sources.

Solar energy is a branch of alternative energy that is based on the direct use of solar radiation to generate energy in any form. Solar energy uses renewable energy sources and is environmentally friendly, i. e. it does not produce harmful waste during the active phase of use.

Solar energy is most often divided into the following areas:

– solar thermal energy – heating of a heat carrier for heating, hot water supply and other needs, which occurs by direct conversion of solar radiation into thermal energy (fig. 14.2, a);

– generation of electricity by means of heat machines, heating of the working fluid in which occurs at the expense of solar energy;

– photovoltaic – converting solar energy into electricity using solar panels (fig. 14.2, b).



a b

**Fig. 14.2. View of the solar collector and solar panel**

Advantages of solar radiation energy over traditional fuels:

– the source of solar energy is almost inexhaustible;

– solar radiation energy can be used on most areas of the Earth's surface as a local source of electricity or heat supply;

– there is a possibility of direct conversion of solar radiation energy into electrical energy;

– available for high temperatures (more than 500ºC);

– it is possible to accelerate photochemical processes;

– environmental safety in the use of solar installations.

Along with the undoubted advantages of solar energy, there are a number of disadvantages. The use of large areas of land for power plants, which creates

difficulties for their location (for example, for a power plant with a capacity of 1 GW, it can be several tens of square kilometers). However, photovoltaic cells in large solar power plants are installed at a height of 1.8 to 2.5 m, which allows the use of land under the power plant for agricultural needs, for example, for grazing livestock.

The efficiency of solar installations depends on the geographical location. The flow of solar energy on the Earth's surface significantly depends on latitude and climate. In different localities, the average number of sunny days per year varies significantly.

The average annual amount of total solar radiation entering one $m^2$ of the surface is in the range of 1,070 kWh/$m^2$ in the northern part of Ukraine up to 1,400 kWh/$m^2$ in the South (fig. 14.3).

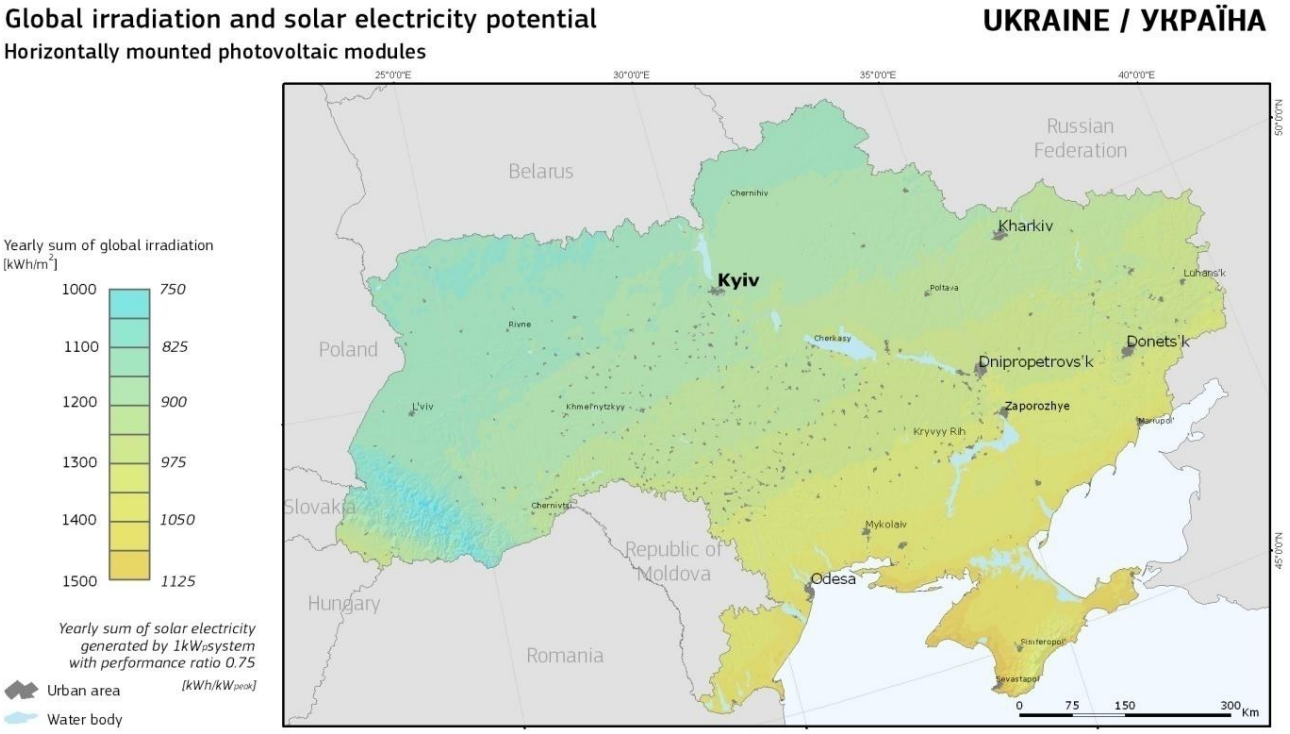


**Fig. 14.3. Distribution of solar energy per unit of horizontal surface area for the territory of Ukraine**

The average daily value of solar radiation by month of the year for individual cities of Ukraine is shown in table 14.1.

**Table 14.1. Solar radiation indicators by month**

| Residential place | Value of solar radiation, kWh/$m^2$/day | | | | | | | | | | | |
|---|---|---|---|---|---|---|---|---|---|---|---|---|
| | January | February | March | April | May | June | July | August | September | October | November | December |
| Kyiv | 1.07 | 1.87 | 2.95 | 3.96 | 5.25 | 5.22 | 5.25 | 4.67 | 3.12 | 1.94 | 1.02 | 0.86 |
| Zhytomyr | 1.01 | 1.82 | 2.87 | 3.88 | 5.16 | 5.19 | 5.04 | 4.66 | 3.06 | 1.87 | 1.04 | 0.83 |
| Odesa | 1.25 | 2.10 | 3.07 | 4.38 | 5.65 | 5.85 | 6.03 | 5.34 | 3.93 | 2.52 | 1.36 | 1.04 |
| Yalta | 1.27 | 2.06 | 3.05 | 4.30 | 5.44 | 5.84 | 6.20 | 5.34 | 4.07 | 2.67 | 1.55 | 1.07 |

Solar power or thermal stations do not work at night and are not efficient enough in the morning and evening twilight. While the peak of energy consumption occurs in the evening hours. In addition, the power of solar installations can fluctuate rapidly and unexpectedly due to changes in weather conditions.

Currently, the cost of solar panels remains high. However, in recent years, there has been a positive trend towards reducing the cost of raw materials for the manufacture of photovoltaic modules. Fig. 14.4 shows the dynamics of changes in the cost of polycrystalline silicon.

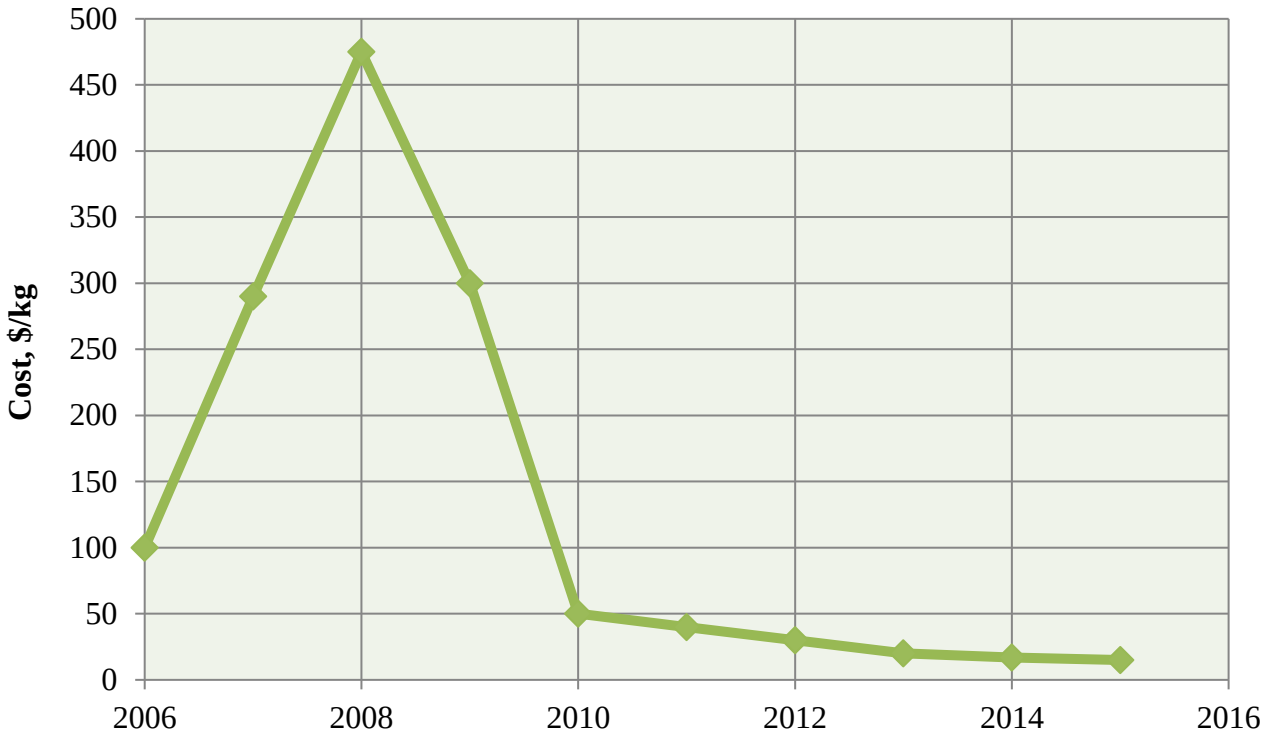


**Fig. 14.4. Graph of changes in the cost of polycrystalline silicon**

The efficiency of solar cells is quite low and averages 16%, while the best samples reach 25%. Samples of photo converters with an efficiency of up to 47% were obtained in research laboratories.

However, despite the existing shortcomings, the development of solar energy remains one of the priority areas for the development of renewable energy. The search for new and improvement of existing technologies, bringing them to a cost-effective level and expanding the areas of use is carried out. The main reasons for such attention are the expected depletion of organic fuel reserves, a sharp increase in their cost, imperfection and low efficiency of technologies for their use, harmful effects on the environment, the consequences of which are increasingly worrying the world community.

In the EU countries, the so-called "solar obligations" for construction using new solar technologies are widely used. This contributes to significant changes in the housing stock, preparing it for the inevitable shortage of fossil fuels, and provides a powerful signal for users and for the construction business. Recent initiatives include *The Thousand Roofs* project in Germany (2,250 homes were equipped with

photovoltaic installations) and the *Million Solar Roofs* program in the United States. Among the leaders of solar energy are also Japan and Italy. Given the long-term perspective, solar energy can largely provide solutions to energy problems in the housing stock.

Over the past ten years, the installed capacity of solar systems in the world has increased more than 4 times, and of photovoltaic systems – 30 times. In fig. 14.5, the graph of increasing the capacity of thermal installations is shown in red, and the dynamics of increasing the total capacity of solar panels is shown in blue.

Among the leading countries in the field of solar thermal energy are China (64% of installed capacity), the United States (5.8%), Germany (4.2%), Turkey (3.9%), and Brazil (2.1%). The leaders in the use of photovoltaic systems are Germany (38 GW), Japan (23 GW), China (28 GW), Italy (18.5 GW), and the United States (18 GW). The leaders in the use of photovoltaic systems are China – 204.7 GW (32.6%), the United States – 75.9 GW (12.1%), Japan – 63 GW (10%), and Germany – 49 GW (7.8%).

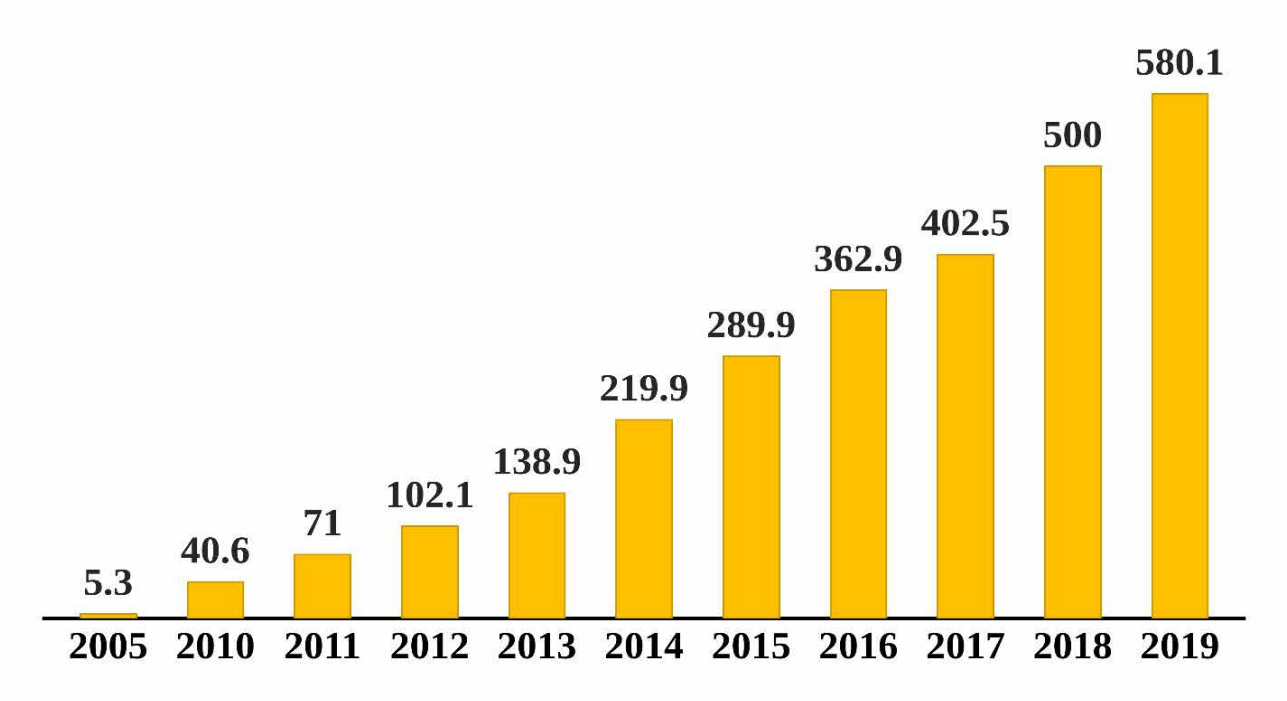


**Fig. 14.5. Dynamics of growth of installed capacity of solar energy facilities in GW**

Ukraine has the following indicators at the end of 2016:

– the total capacity of installed photovoltaic systems is 0.8 GW;

– total thermal installations put into operation – 0.15 GW.

The prospects and feasibility of developing solar energy in Ukraine are determined by the following factors:

– the energy supply of total solar radiation to the territory of Ukraine is 750 trillion kWh/year;

– availability of a well-developed industrial infrastructure, potentially ready for rapid implementation of the production of solar power plants and necessary components on an industrial scale;

– the possibility of organizing significant export supplies of solar power plants and their components, which will lead to a quick return on investment.

Ukraine has a strong infrastructure, including a developed raw material base, mechanical engineering and metalworking, electrical industry, microelectronics, which can meet the needs for the necessary means for the efficient development of solar energy.

Priority areas for the development of solar energy in Ukraine at the present stage:

– introduction of hot water and heating systems using solar collectors;
– creation of highly efficient equipment for photovoltaic power;
– creation of combined solar-fuel power plants and boiler houses.

### 14.2. Solar thermal energy

All solar collectors can be divided into 3 types: vacuum, flat and concentrator collectors.

The vacuum collector is made of long glass tubes-shells with a length of 1800 mm and a diameter of 5.8 cm. The operation of vacuum tubes is based on the principle of a thermal tube (heat-pipe technology), which is a hollow copper rod sealed at both ends with an extension at the top (fig. 14.6). Inside the rod is a non-toxic liquid (inorgatik). When heated to boiling point, the liquid rises in a vaporous state to the upper part – the tip (condenser), the temperature on which can reach from 250 to 380°C. The liquid condenses, releasing heat. Condensate flows down the walls of the tube and the process is repeated. The heat pipe is inserted into the glass tube and fixed between two aluminum fins. The Shape of the fins ensures reliable contact between the heat pipe and the inner surface of the vacuum pipe, which is a condition for maximum heat transfer to the copper heat pipe, and then to the heat carrier in the flow heat exchanger. The inner cavity of the heat tube is vacuumed, so the liquid evaporates even at a temperature of about 30°C. at a lower temperature, the tube "closes" and additionally retains heat.

Heat is transferred from the thermal tube head to the base of the collector – receiver. The solar collector receiver is copper with polyurethane insulation, covered with a stainless or aluminum alloy housing. Heat transfer occurs through the copper "sleeve" of the receiver. Thanks to this, the heating circuit is separated from the pipes. If one tube is damaged, the collector continues to work. The procedure for replacing the tubes is very simple, and there is no need to drain the non-freezing mixture from the heat exchanger circuit.

The vacuum tube consists of two glass tubes. The design of glass vacuum tubes is similar to that of a thermos flask, with one tube inserted into the other with a large diameter. The outer tube is made of transparent heavy-duty borosilicate glass. The inner tube is also made of clear borosilicate glass coated with a special selective nanocoating that provides maximum heat absorption with minimal reflection.

The thickness of the glass wall-shell is 2.2 mm, which is enough to protect against hail, snow and strong gusts of wind. Due to the round shape of the shell tubes, direct and scattered rays and infrared radiation pass to the thermal tube at different angles, which increases the efficiency of energy absorption during the sun's movement

from East to West during the day. To avoid heat loss, air is pumped out of the space between the two pipes and a vacuum is created. A barium gas absorber is used to maintain a vacuum between the two glass pipes. During production, the gas absorber is exposed to high temperatures, as a result of which the lower end of the vacuum pipe is covered with a layer of pure barium. This barium layer absorbs substances that are released from the pipe during storage and operation, thus maintaining a vacuum state. The barium layer is also a clear visual indicator of the vacuum state, when the vacuum disappears, the silver barium layer turns white. This allows determining whether the handset is working properly.

The operating temperature range of the system is from 60 to 150°C. A vacuum collector with a thermal tube is currently the most technologically advanced type of collector that can operate effectively at ambient temperatures up to minus 50°C.

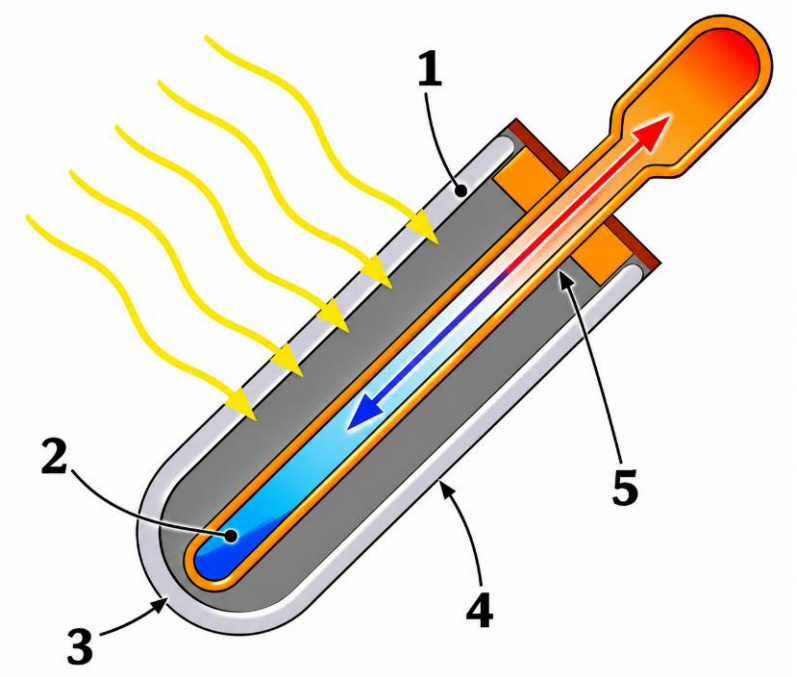


**1 – selective coating; 2 – inorgatik; 3 – vacuum; 4 – borosilicate glass; 5 – heat pipe**

**Fig. 14.6. To explain the processes in the vacuum collector**

Another type of tubular solar collectors are devices with coaxial tubes, in which a U-shaped flow heat exchanger is located. With high efficiency, U-type tubes have one significant drawback – they are a single whole element and must be mounted simultaneously. At the same time, this design eliminates the replacement of single tubes when they fail. In addition, the disadvantages of collectors with U-type pipes, in comparison with heat pipes, are their higher hydraulic resistance, increased requirements for the coolant and, importantly, higher cost.

An increase in operating temperatures to the level of 120 to 250ºC is possible by introducing concentrators into solar collectors using parabolocylindrical reflectors laid under the absorbing elements (fig. 14.7). Sun tracking devices are also required to obtain higher operating temperatures.

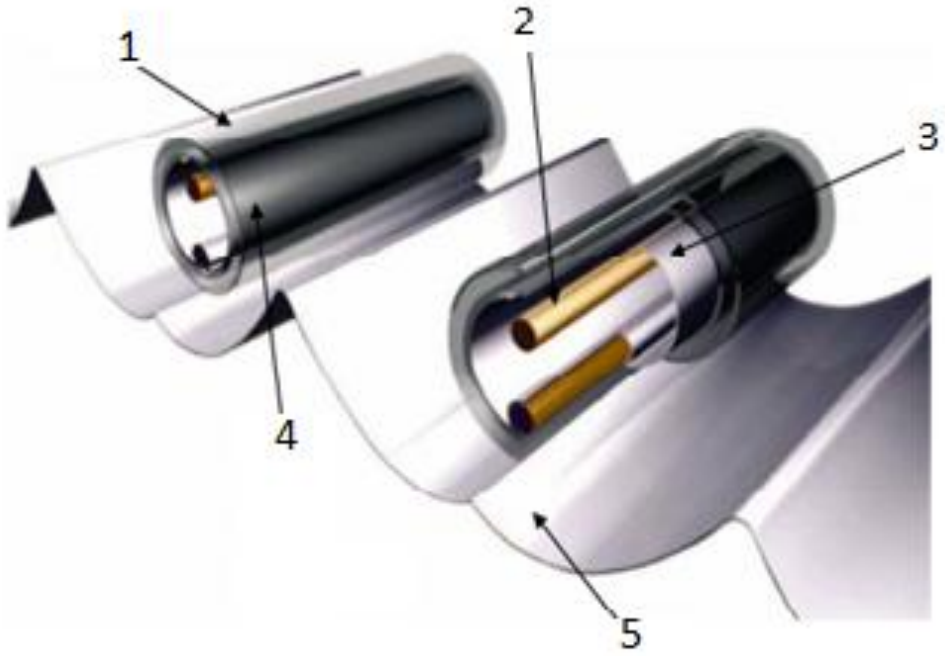


**1 – vacuum tube; 2 – U-shaped tube; 3 – aluminum heat-conducting layer; 4 – selective coating; 5 – reflector**
**Fig. 14.7. Tubular collectors with reflectors**

In addition to devices using thermal tube technology, tubular vacuum collectors with direct heat transfer to water have become widespread (fig. 14.8).



**Fig. 14.8. Vacuum collector with direct heat transfer to water**

In such a collector, vacuum tubes are connected to the storage tank. From the heat exchanger circuit, water flows directly into the tubes, heats up and returns back. Such systems are also called thermosiphon systems. The advantages of these systems include direct heat transfer to water without the participation of other elements. Thermosiphon systems work on the principle of natural convection, during which warm water moves up. In thermosiphon systems, the tank must be located above the collector. When the water in the collector tubes heats up, it rises to the top of the tank. Cooler water from the tank flows downwards, thus ensuring circulation throughout the system. In small systems, the tank is combined with a collector and is not designed for main pressure, so thermosiphon systems must be used either with water supply from a higher tank or through pressure reduction reducers. Such a system has minimal hydraulic resistance. Thermosiphon systems are used to provide hot water to facilities that are operated in the warm season.

To increase efficiency, such systems can additionally be equipped with a built-in heat exchanger. The vacuum collector with direct heat transfer and integrated heat exchanger has all the advantages and features of the previous type of collectors.

The difference from the previous version is the presence of an efficient heat exchanger built into the tank, which allows connecting the collector to the tank to the pressure water supply network. At the same time, the collector maintains a minimum hydrostatic pressure. The hot water circuit can be filled with a non-freezing liquid, which allows it to be used even at low sub-zero temperatures (up to minus 5...10°C). Another advantage is that hardness salts and other contaminants are not deposited in the collector, since the volume of the coolant is the same, and water for household needs passes only through an internal copper heat exchanger.

The Parabolic trogsolar collector uses a mirror surface to concentrate solar energy, which focuses light from a large surface on a smaller surface of the absorber. Thanks to this, a fairly high temperature is achieved.

In some cases, the radiation can be concentrated at the focal point, in other cases – along a thin focal line. Special tracking devices allow changing the position of the concentrator for the most efficient absorption of solar energy during daylight hours. Operating temperature ranges from 80 to 150°C. Concentrators are most efficient in desert regions and close to the equator and are mainly used in industry due to their high cost. A general view of a solar station with collector concentrator is shown in fig. 14.9.

Collectors produce thermal energy when there is solar energy. Sometimes there may be situations when it is impossible to use the received energy or at a certain point in time, for some reason it is impractical. Then a kind of stagnation occurs in the solar system.

Stagnation of solar systems is an excess of thermal energy due to insufficient or absent energy extraction, followed by boiling of the liquid (coolant) in the collector. This phenomenon is not very favorable for the collector, although it is not an emergency. Stagnation in most cases occurs in the summer. Most of all, combined solar systems are subject to stagnation, in which thermal energy is used for heating. Stagnation occurs when circulation stops or slows down very much, while solar radiation does not stop affecting the collector. Continuous exposure to sunlight and stagnation leads to the fact that the temperature of the coolant begins to rise, which

leads to boiling of the liquid and a sharp increase in pressure in the solar circuit.



**Fig. 14.9. Solar power station with collector concentrators**

A diagram of a traditional system in which water is heated by solar energy is shown in fig. 14.10. A gas or electric boiler ensures the operation of the heating system and maintains the temperature of domestic water in the cold season.

A flat collector is a structure consisting of an absorber element that absorbs solar radiation, a transparent coating (usually tempered glass with a reduced metal content is used) and a thermal insulation layer (fig. 14.11).

The special optical coating of the flat collector does not emit heat, which significantly increases its efficiency. This coating consists of a strong thin layer of an amorphous semiconductor deposited on a metal base and is characterized by high absorption in the visible region of the spectrum and low radiation coefficient in the long-wave infrared region. Sheet copper is widely used as an absorber.

The operating temperature range of the system is from 20 to 80°C. To increase the operating temperatures of flat collectors to 120°C, a double-layer glass coating is used, which reduces convection losses. However, this reduces the optical efficiency, which can be compensated by the use of an anti-reflective coating.

A flat solar collector is optimal if it is needed to use solar energy in April-October. Due to its relative cheapness, it can be optimal for heating household water and swimming pools. In the cold season, at subzero temperatures, a flat solar collector cannot serve as a heat source due to large losses to the environment.

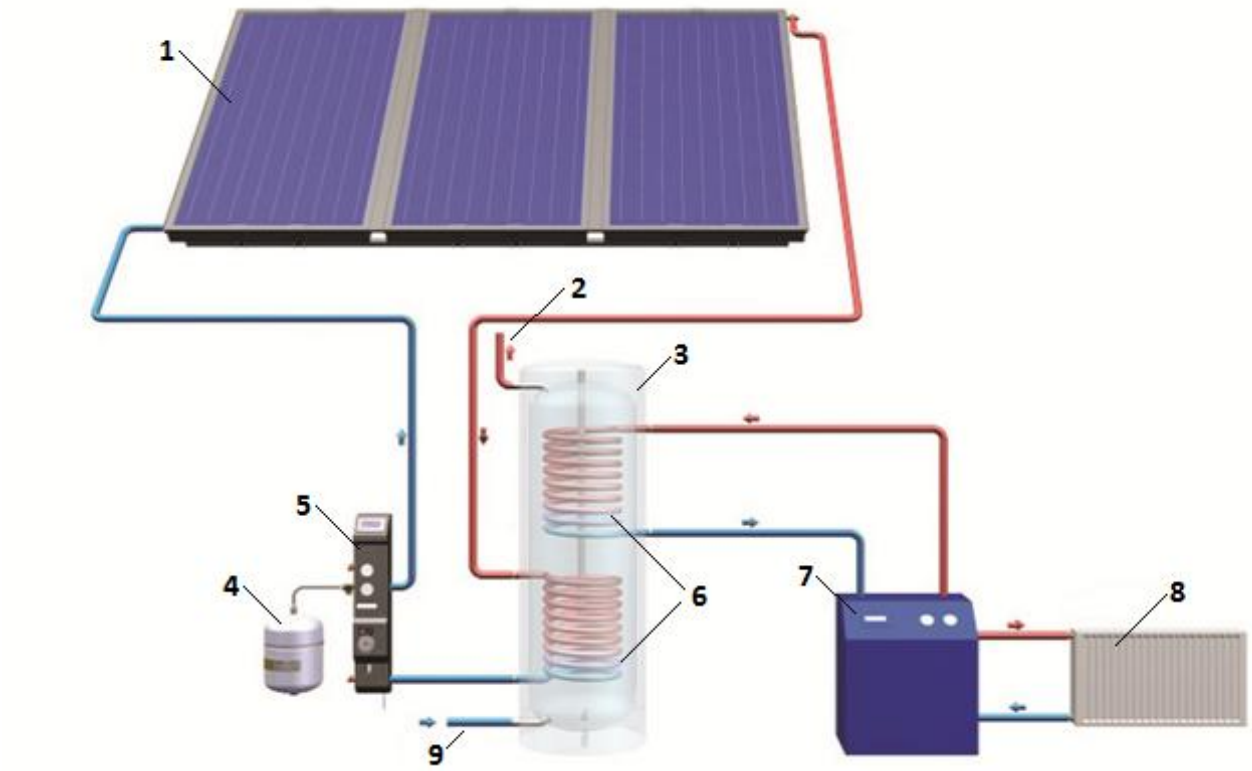


**1 – solar collector; 2 – hot water; 3 – battery tank; 4 – expansion tank; 5 – pump group; 6 – heat exchangers; 7 – boiler; 8 – radiator of the heating system; 9 – cold water inlet**

**Fig. 14.10. Solar heat supply scheme**

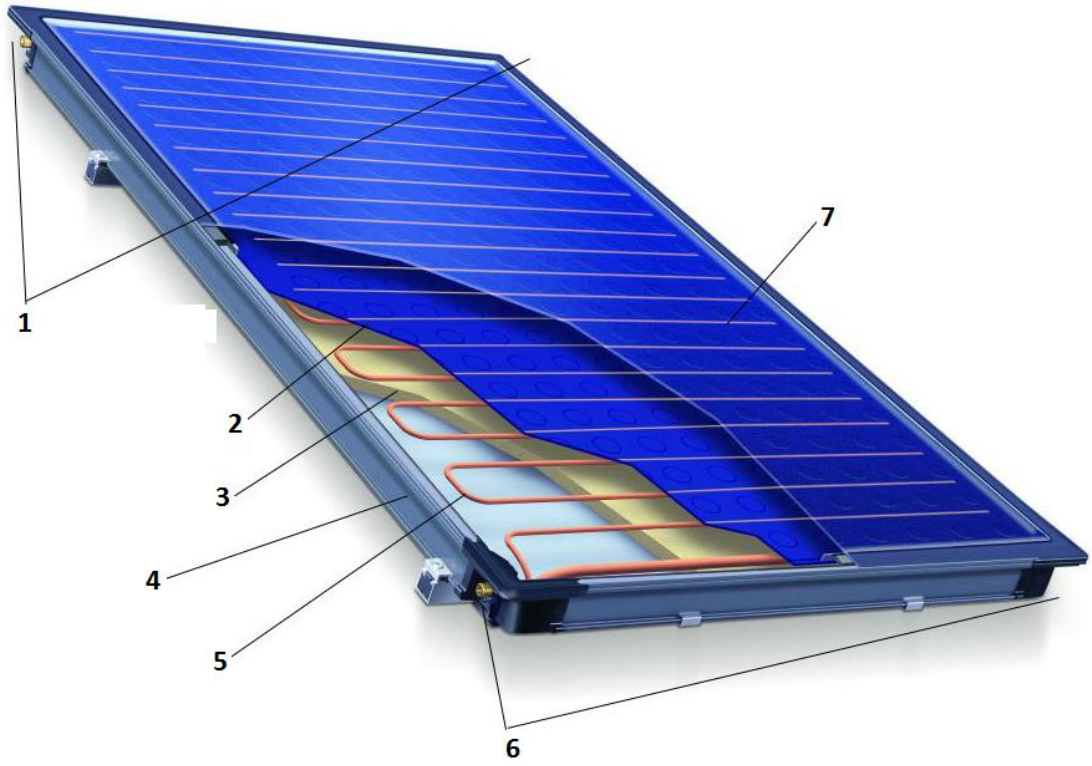


**1 – heated coolant outlet; 2 – absorber; 3 – thermal insulation; 4 – housing; 5 – copper tubes; 6 – coolant inlet; 7 – coated glass**

**Fig. 14.11. Flat collector structure**

The disadvantages of this type of collector include rather low heating temperatures of the circulating liquid, which, among other things, leads to the probability of reproduction of pathogenic bacteria, which is not present in systems with vacuum collectors. If the sealing glass is broken, the efficiency of the collector is significantly reduced, since heat is spent on heating the environment, and the missing greenhouse effect does not allow the coolant to be sufficiently heated.

The total heat flow entering the heat carrier in a flat solar collector is determined by the balance of the absorbed flow and heat losses of the receiver as a result of exceeding the temperature of the absorbing surface over the ambient temperature:

$$Q = Q_{AF} - Q_{HL} = \eta_0 S_S E - k_{HL}(t_S - t_E)S_S = \\ = \tau_S(1-\rho_A)\big(1+\rho_A(1-\tau_S)\big)S_S E - k_{HL}(t_S - t_E)S_S \qquad (14.1)$$

where $Q$, $Q_{AF}$, $Q_{HL}$ – total heat flow entering the heat carrier in a flat solar collector, absorbed flow and heat loss of the receiver, respectively, W; $\eta_0$ – optical efficiency that takes into account the losses of the solar collector on the reflection of solar radiation and its absorption by a transparent coating; $S_S$ – illuminated surface area, $m^2$; $E$ – solar flux density, $W/m^2$; $k_{HL}$ – heat loss coefficient, $W/(m^2 \cdot °C)$; $t_S$ – absorbing surface temperature, °C; $t_E$ – ambient temperature, °C; $\tau_S$ – transmittance of a translucent coating; $\rho_A$ – reflection coefficient of a translucent coating.

The highest coefficient of energy return of a solar installation for a year can be achieved if it is located in a southerly direction with an inclination from 30 to 35 degrees to the horizontal (table 14.2). However, even with a significant deviation from these conditions (from the South-West to the South-East with a slope of 25 to 55 degrees), it is advisable to install a thermal solar installation. Even if the solar installation is oriented in an easterly or westerly direction, you can expect significant heat transfer if the roof slope is from 25 to 45 degrees. In winter, a steeper angle would be more efficient, but two-thirds of the energy output of a solar installation is provided in the summer.

**Table 14.2. Relative values of heat output depending on the orientation and angle of inclination of the solar collector**

| Orientation (0-South, 15-90-East, West) | Horizontal tilt angle | | | | | | |
|---|---|---|---|---|---|---|---|
| | 0 | 15 | 30 | 45 | 60 | 75 | 90 |
| 0 | 0.89 | 0.97 | 1 | 0.99 | 0.93 | 0.83 | 0.69 |
| 15 | 0.89 | 0.96 | 1 | 0.98 | 0.93 | 0.83 | 0.69 |
| 30 | 0.89 | 0.96 | 0.99 | 0.97 | 0.92 | 0.82 | 0.70 |
| 45 | 0.89 | 0.94 | 0.97 | 0.95 | 0.90 | 0.81 | 0.70 |
| 60 | 0.89 | 0.93 | 0.94 | 0.92 | 0.87 | 0.79 | 0.69 |
| 75 | 0.89 | 0.91 | 0.91 | 0.88 | 0.83 | 0.76 | 0.66 |
| 90 | 0.89 | 0.88 | 0.87 | 0.83 | 0.78 | 0.71 | 0.62 |

An angle of attack of less than 20 degrees, on the contrary, should be avoided, since in this case the degree of contamination of the collector increases. If the collector area should be distributed over different roof areas, then the requirements for hydraulic

connection of collector areas should be observed. Each panel must be equipped with a collector temperature sensor and have a separate pump unit.

### 14.3. Photovoltaic

To generate electricity as a result of direct conversion of solar energy, special panels made on the basis of mono - or polycrystalline silicon or using thin-film technologies are used.

The principle of operation of solar panels is based on the use of semiconductor *p-n* junctions and consists in obtaining an additional electromotive force as a result of the action of light on the *p-n* junction (fig. 14.12). When a photon is absorbed in the region adjacent to the *p-n* junction, a pair of charge carriers (an electron and a hole) is formed. One of these particles is a minor charge and is very likely to penetrate the transition. As a result, holes accumulate on the *p*-type semiconductor side, and electrons accumulate on the *n*-type semiconductor side. If an external consumer is connected, current will flow in the circuit under the action of an electromotive force.

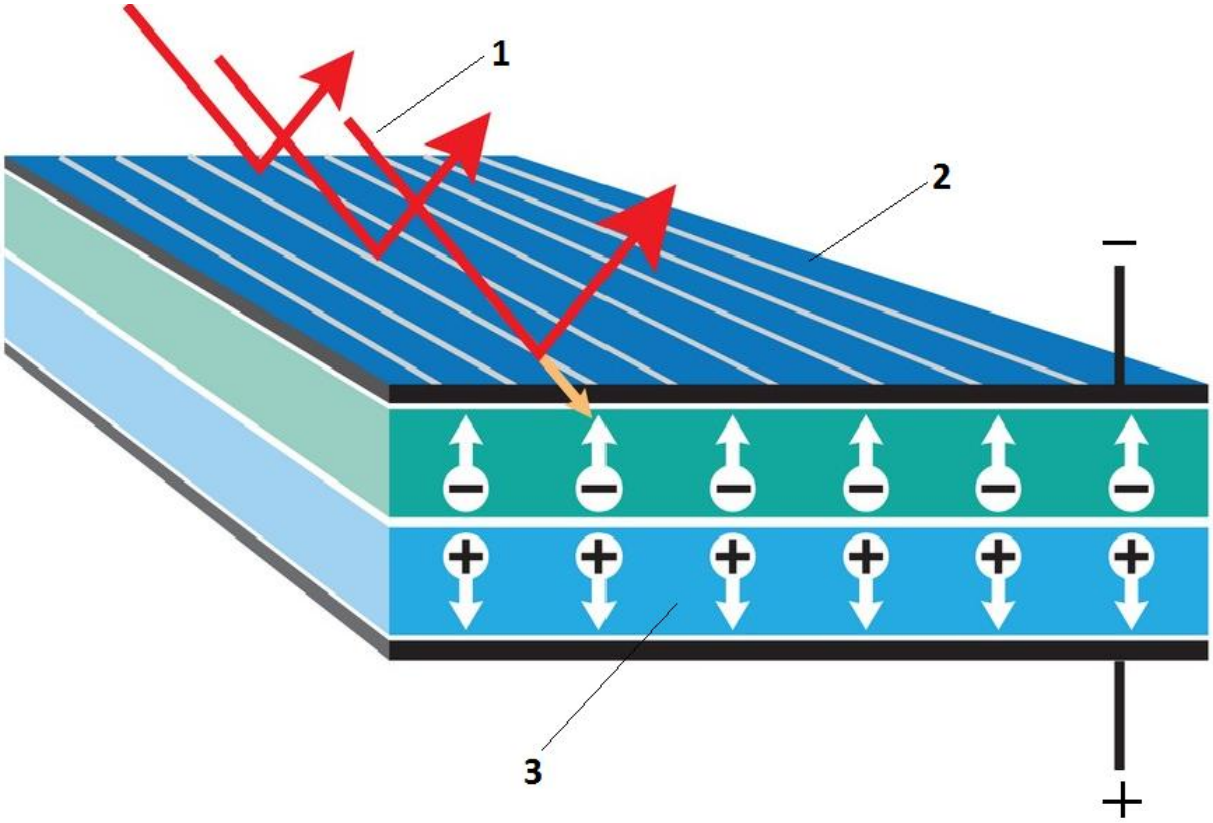


**1 – sunlight; 2 – n-type semiconductor; 3 – p-type semiconductor**
**Fig. 14.12. To the principle of a solar panel operation**

The most popular solar panels on the market are monocrystalline solar panels. This type of battery consists of a large number of monocrystalline cells that perform the function of converting electrical energy from sunlight falling on their surface.

Monocrystalline elements have rounded corners and a uniform surface. Rounded corners are due to the fact that cylindrical workpieces are used in the production of monocrystalline silicon. The uniformity of color and structure of single-crystal

elements indicates that it is a single grown silicon crystal, and the crystal structure is uniform.

The most optimal number of segments in monocrystalline batteries is considered to be 36. This allows efficient use of solar energy. The efficiency of monocrystalline batteries reaches 22%. Monocrystalline batteries are quite light and compact, able to bend slightly. Thanks to this property, they can be easily mounted on uneven surfaces where it is difficult to achieve the correct angle of inclination. Single crystal batteries have a reliable and durable fiberglass housing. Thanks to this, no moisture penetrates inside the unit, so these units can be used in difficult natural conditions.

A typical monocrystalline battery structure is shown in fig. 14.13. For this type of solar panels, the maximum power is achieved if the sky is clear, the air temperature is from 15 to 25°C, and the panels are directed to the sun. Even a small cloud cover (about 70%) can significantly reduce the power of the installation, and in the case of heavy cloud cover, we can assume that the operation of the solar panel is blocked, since the power is reduced by 90%. In order not to change the position of the panels depending on the season, it is recommended to install them in the direction of the equator, the deviation should be equal to the latitude of the terrain.

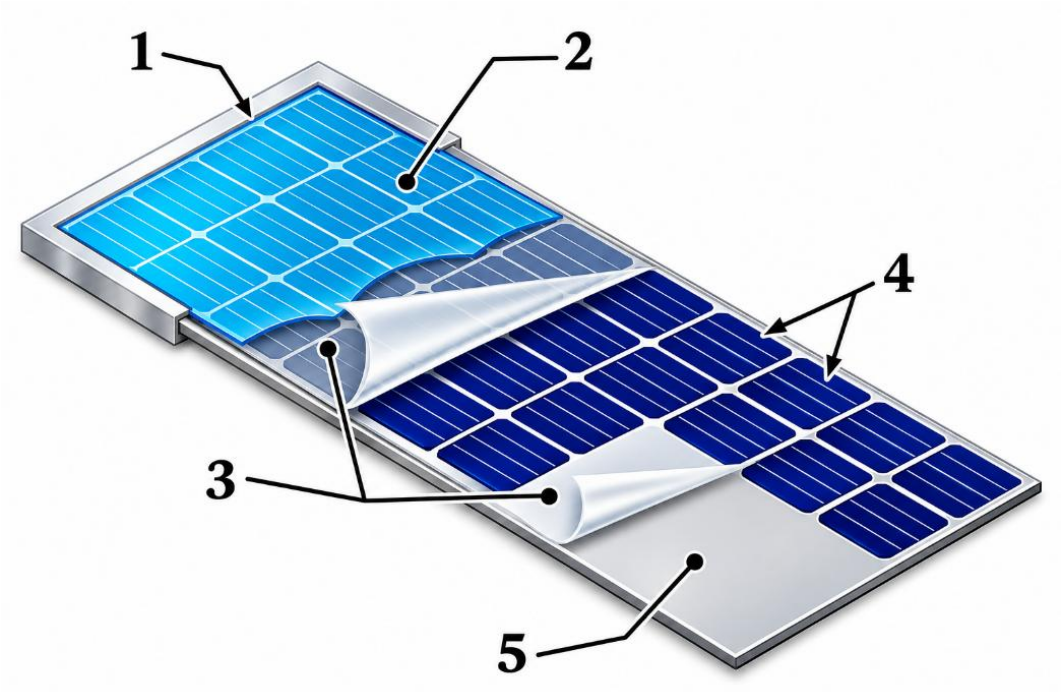


**1 – aluminum anodized profile; 2 – -tempered glass; 3 – polymer film; 4 – monocrystalline elements; 10 – panel base**
**Fig. 14.13. Typical monocrystalline battery structure**

Polycrystalline solar panels are considered an alternative to monocrystalline batteries. The square shape of polycrystalline elements is a consequence of the use of rectangular workpieces during manufacturing. The heterogeneity of the color and structure of the elements is caused by a large number of dissimilar silicon crystals and a small amount of impurities. Serial samples of polycrystalline elements have an efficiency of up to 18%, which is a consequence of the use of secondary raw materials

(recycled solar panels or silicon waste from the metallurgical industry). This leads to various defects in polycrystalline elements, such as crystal boundaries, microdefects, carbon and oxygen impurities. Images of solar panel elements are shown in fig. 14.14.

The cost of a polycrystalline cell battery is lower per unit of power compared to monocrystalline technology. This is due to the more expensive manufacturing process and the use of high-purity silicon in the manufacture of monocrystalline elements. The main parameters, namely the voltage and power of the solar panel, do not depend on the type of elements, so both types of panels of the same power are available on the market. That is, it is possible to buy polycrystalline panels of the same power in larger sizes, but at a lower price.

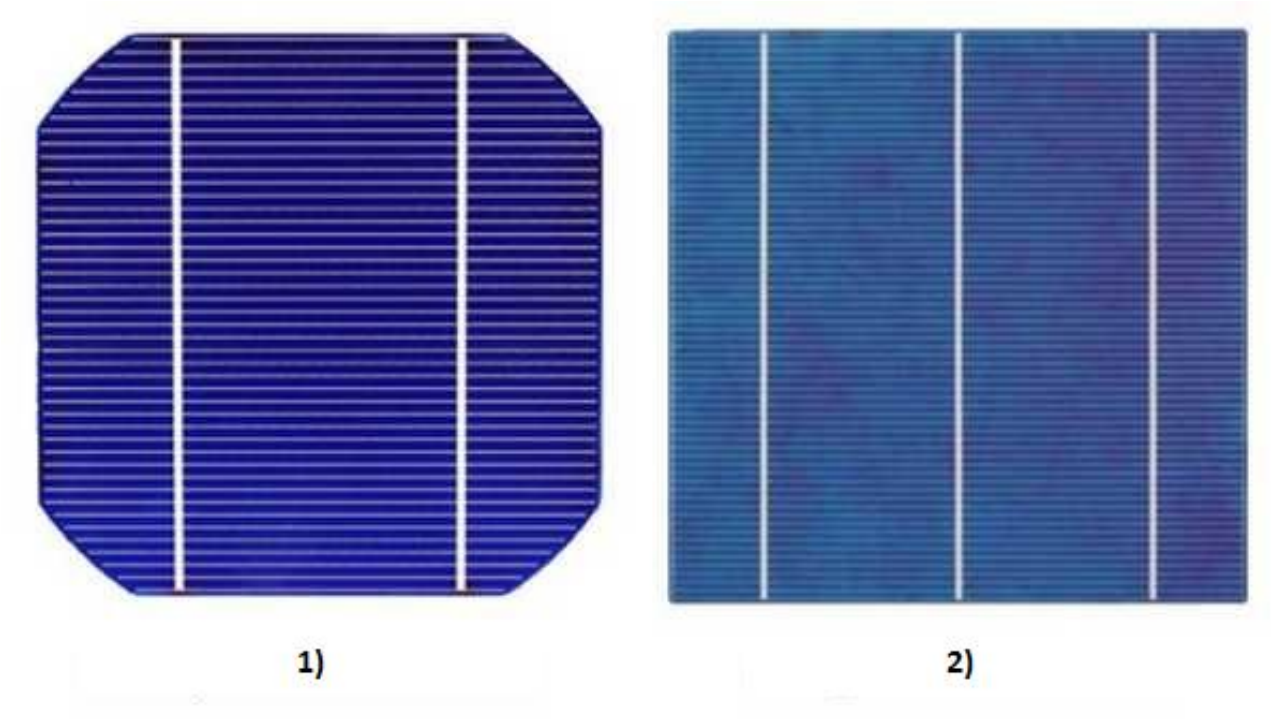


**1 – monocrystalline element; 2 – polycrystalline element**
**Fig. 14.14. Comparison of solar panel cells**

The scope of application of mono and polycrystalline solar panels is quite wide: it can be charging batteries, power supply for garden pumps, providing power to the ship's onboard equipment, lighting garden and household plots, powering alarms and communication facilities, etc.

The diagram of a typical solar power supply system is shown in fig. 14.15.

In addition, there is a significant prospect in the use of solar power plants in agricultural production. For example, high costs of electric energy in the production of milk and other livestock products contribute to low profitability of the dairy and commodity sector of agricultural production. In addition, one of the ways to reduce the cost of final products is to use renewable energy.

The components of the solar system depend on the purpose of the power plant. For example, grid power plants contain: solar panels – convert solar radiation into electrical energy, mounting frames – to accommodate solar panels, an inverter – converts DC electricity generated by solar panels into alternating current, a wire –

transmits electricity from the system to the equipment, a meter – measures the amount of energy produced and controls the system. A grid-based power plant for generating alternating current and directly supplying it to the grid at a green tariff, or for its own needs.

The grid solar power plant is connected to the General Electric Grid and partially or completely compensates for the needs for electric energy during daylight hours, and supplies excess energy to the grid at a special "green" tariff.

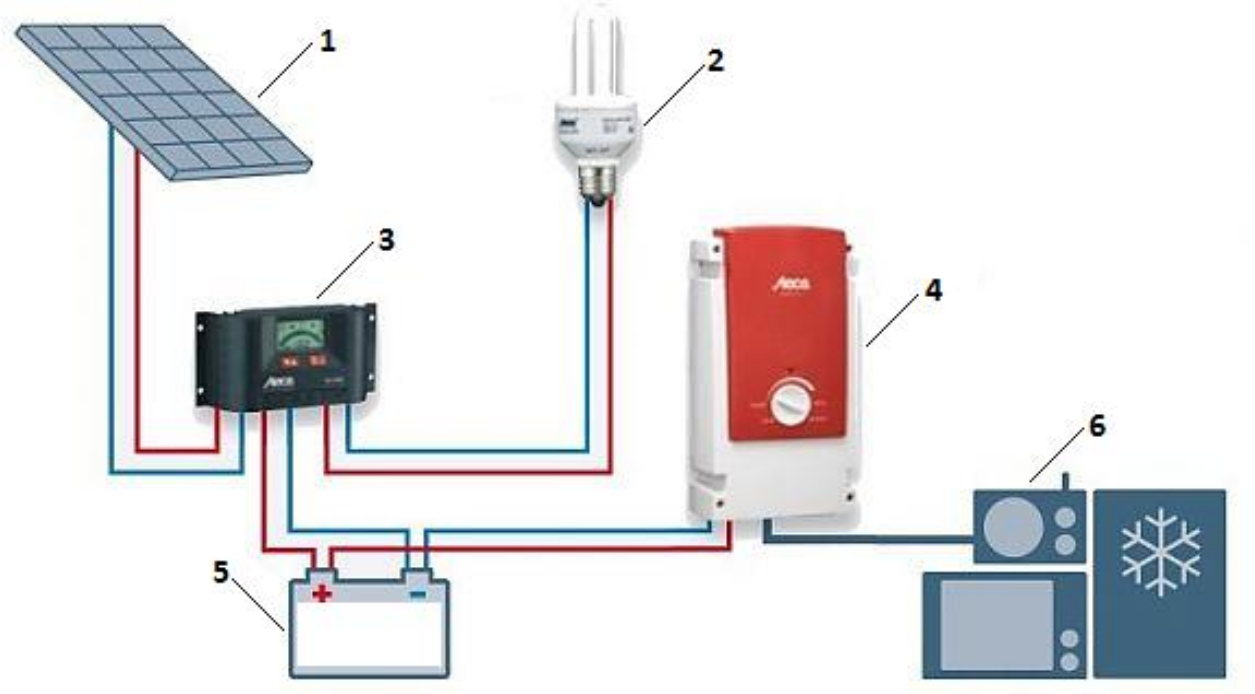


**1 – solar panel; 2 – 12 V load; 3 – charging controller; 4 – inverter; 5 – rechargeable battery; 6 – 220 V load**

**Fig. 14.15. Scheme of solar power supply of household appliances**

To convert direct current into alternating current with the necessary parameters and to regulate the process of consumption of electrical energy produced by a solar power plant, a network inverter is designed. The connection diagram for such a power plant is shown in fig. 14.16.

The direct electric current generated by the station is supplied to the network inverter, which converts the current from direct to alternating with the required parameters (220/380V and 50 Hz). From the inverter, alternating current is supplied to the consumer, if there is not enough energy, and then the consumer (livestock farm) receives part of the energy from the external network. When the station produces excess power, part of the alternating current is supplied to the general network at a special tariff. When the power supply is not possible to the general network, the flow of excess energy to the network must be limited, for this purpose, so-called "smart meters" are installed that limit the production of electric energy to the level of consumption. In addition to the smart meter, it is possible to install a wattrouter that

allows some of the electrical energy to be transferred to backup consumers, for example, to create a water supply, or to heat a certain volume of water or charge batteries.

Alternatively, it is possible to install an autonomous power station (fig. 14.17), this will be appropriate in places where there are good pastures, and the supply of electric energy is difficult due to technical or economic problems.

In an autonomous station, the generated electrical energy is fed to energy storage devices, mainly batteries.

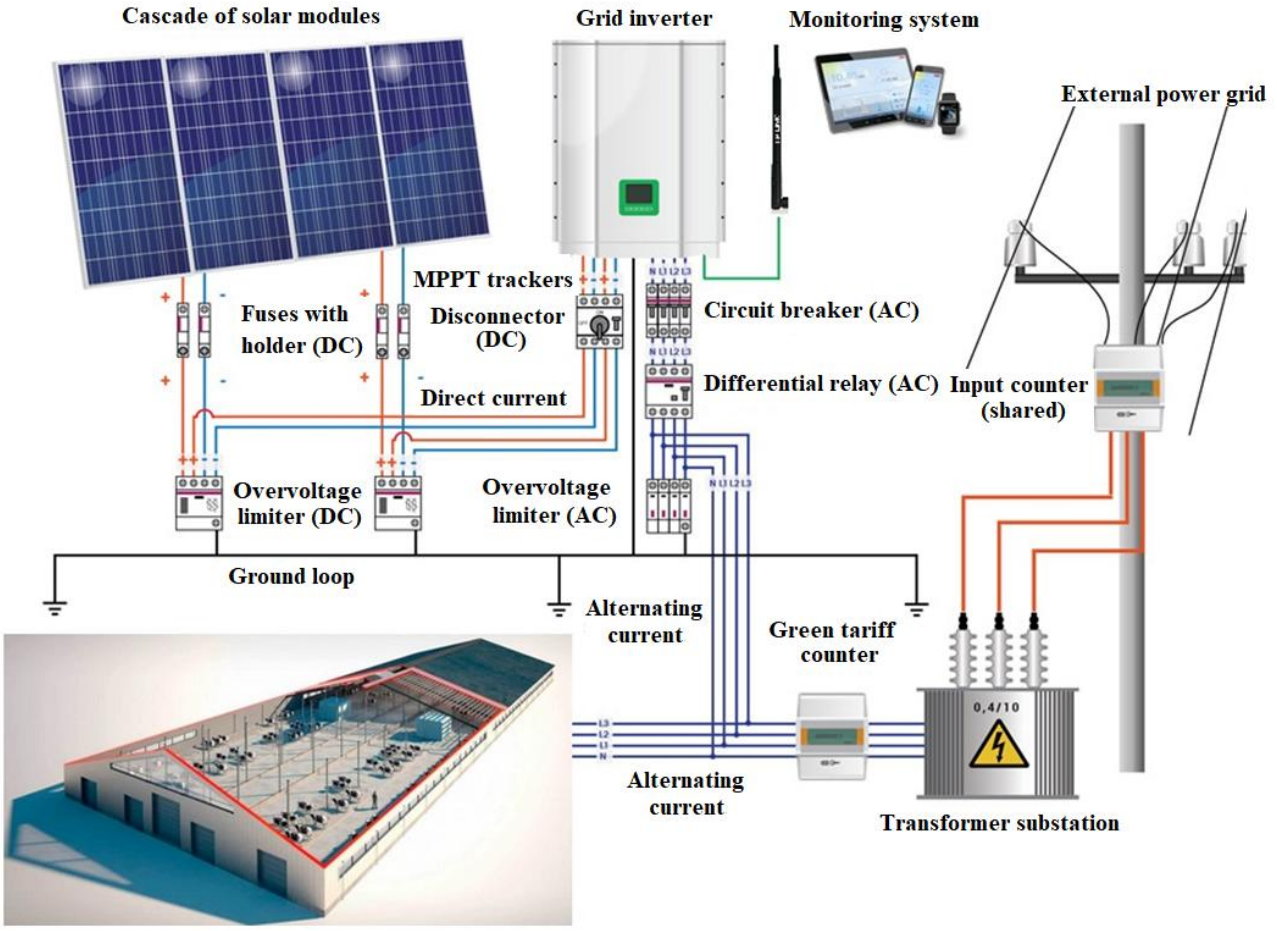


**Fig. 14.16. Grid solar power plant connection diagram**

It should be noted that the presence of rechargeable batteries significantly increases the cost of the power plant; in addition, the battery life is relatively insignificant and ranges from 3 to 4 years.

Thin-film solar panels are considered the cheapest option of all existing types of batteries. Unlike monocrystalline batteries, thin-film solar cells do not require direct sunlight. Such batteries are less dependent on the level of cloud cover, and in cloudy weather they lose power by only 10 to 15%. The biggest disadvantage for this type of solar panel is the large area, which is 2.5 times larger than other samples at the same power. They are mainly used for power supply systems of large facilities.

Among thin-film technologies, there are:

– silicon: amorphous, microcrystalline, nanocrystalline, CSG (crystalline

siliconon glass);

– based on cadmium telluride (CdTe);

– based on copper-indium-(gallium) selenide (CI(G) S).

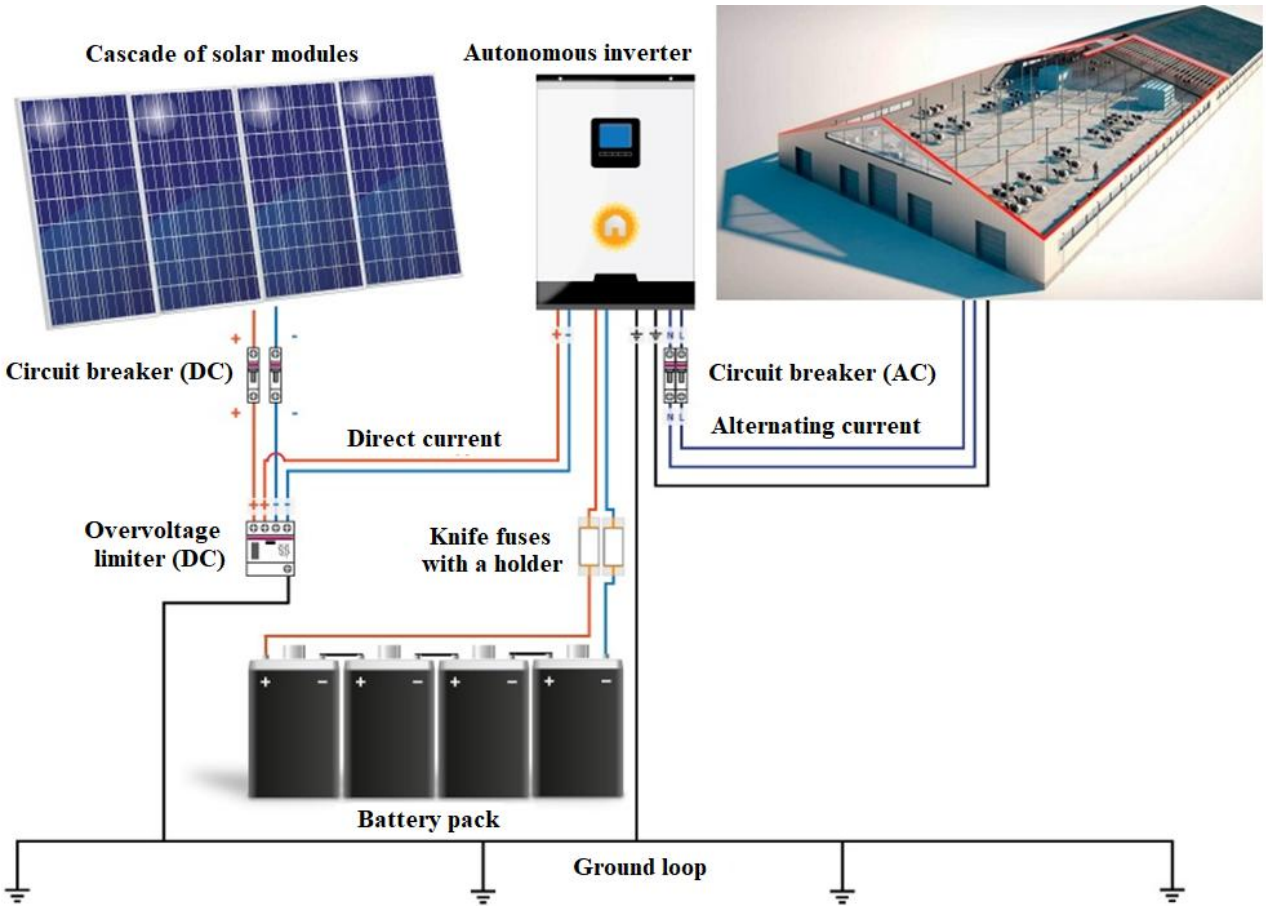


**Fig. 14.17. Autonomous solar power plant**

The efficiency of photovoltaic modules is calculated according to a known formula, where the specific power of the module is:

$$\frac{P}{S} = I\eta cos\theta_Z, \qquad (14.2)$$

where $P$ is the power of the photovoltaic module, W; $S$ – area of the photovoltaic module, m2; $I$ – intensity of solar radiation, W/m2; $\eta$ – the efficiency of the photovoltaic module, relative unit; $\theta_Z$ – the angle of incidence of solar radiation (the angle between the direction of incidence of solar radiation and the perpendicular to the photovoltaic module), degree.

Schematic images of the ecliptic that is, the visible movement of the Sun around the Earth, are used to calculate the inclination angle (Fig. 14.18).

The relationship between the above-mentioned angles can be described by the dependence:

$$cos\theta = (A - B)sin\delta + [Csin\omega + (D + E)cos\omega]cos\delta, \qquad (14.3)$$

where $A = sin\varphi cos\beta, B = cos\varphi sin\beta cos\gamma, C = sin\beta sin\gamma, D = cos\varphi cos\beta,$ $E = sin\varphi sin\beta cos\gamma$; $\delta$ – angle of declination of the sun, deg.; $\varphi$ – geographical latitude of the installation location, rad; $\omega$ – the time angle that determines the angular shift of the sun during the day, rad.

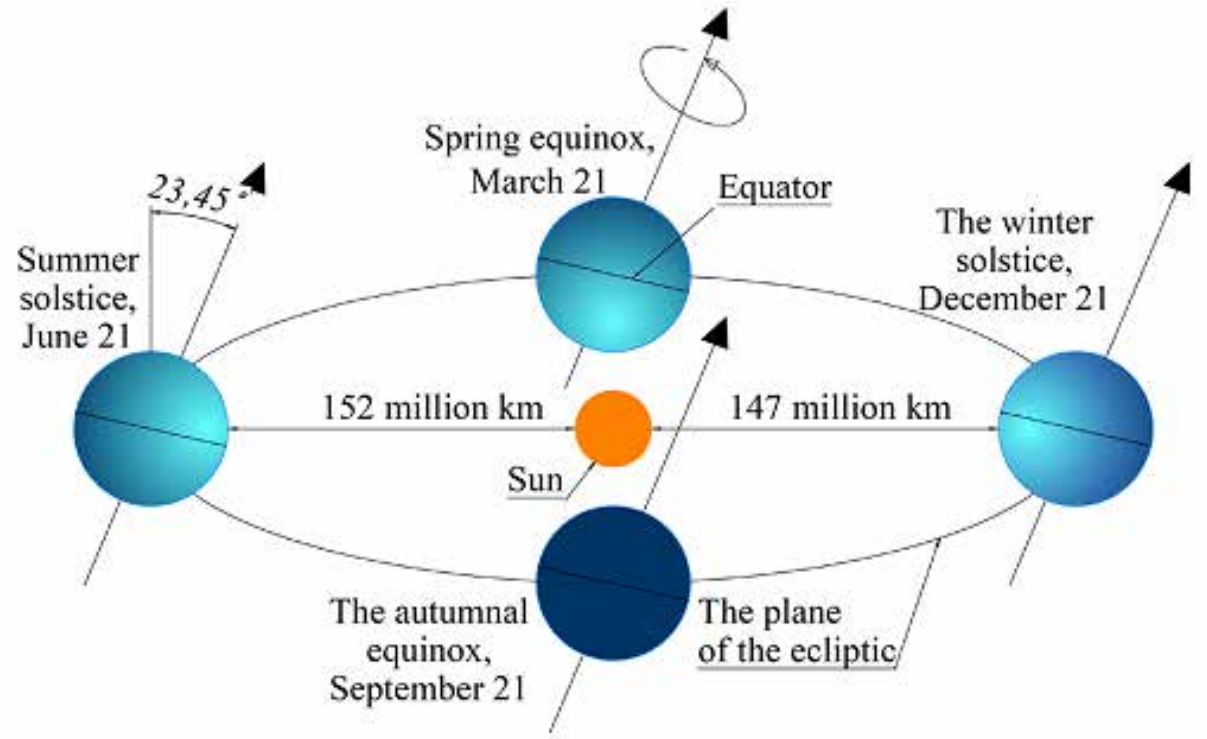


**Fig. 14.18. Diagram of the image of the Earth revolving around the Sun**

Given that the Earth rotates around the sun in a year, and the direction of the Earth's axis remains fixed in space at an angle of 23.45°, the angle of declination of the Sun $\delta$ is a measure of seasonal changes and is determined by the expression:

$$\delta = 23.45^o sin\left[\frac{360^o(284+n)}{365}\right], \quad (14.4)$$

where $n$ – day of the year ($n$=1 corresponds to January 1).

The Earth rotates on its axis and moves in an almost circular orbit around the Sun and, as a result, is in a parallel stream of solar rays (Fig. 14.19).

Based on this scheme, the angular length of daylight $\alpha$ will be:

$$If\ \delta < 0 \rightarrow \alpha = 2arctan\sqrt{\frac{cot^2\varphi}{tan^2\delta} - 1};\ If\ \delta \geq 0 \rightarrow \alpha = 2\pi - 2arctan\sqrt{\frac{cot^2\varphi}{tan^2\delta} - 1}. \quad (14.5)$$

The cosine of the angle of incidence of the sun's rays relative to the $z$-axis, which is perpendicular to the surface of the solar panel, will be:

$$cos\theta_Z = \sqrt{1 - cos^2\theta_H - cos^2\theta_V} = \sqrt{sin^2\theta_H - cos^2\theta_V} \quad (14.6)$$

The annual efficiency of the installation of photovoltaic modules is determined as the annual weighted average value of the cosine of the angle of incidence of solar rays $cos\theta_Z^{an}$ on the plane of the solar panel according to the following expression:

$$cos\theta_Z^{an} = \frac{\sum_{i=1}^{365} \alpha_i cos\theta_{Z_i}^d}{\sum_{i=1}^{365} \alpha_i} \quad (14.7)$$

where $\alpha_i$ is the angular length of the *i-th* day, degrees; $cos\theta_{Z_i}^d$ – daily efficiency of the installation of photovoltaic modules.

The daily efficiency of the installation of photovoltaic modules is determined as the weighted average daily value of the cosine of the angle of incidence of solar rays on the plane of the solar panel:

$$cos\theta_{Z_i}^{d} = \frac{\sum_{j=0}^{\alpha_i} \alpha_i cos\theta_j}{\sum_{j=0}^{\alpha_i} \alpha_i}. \quad (14.8)$$

where $\alpha_j$ is the current value of the angular length of the $j$-th day from sunrise to sunset, degrees; $cos\theta_j$ – corresponding to the angular length of the $j$-th day, the value of the cosine of the angle of incidence of the sun's rays.

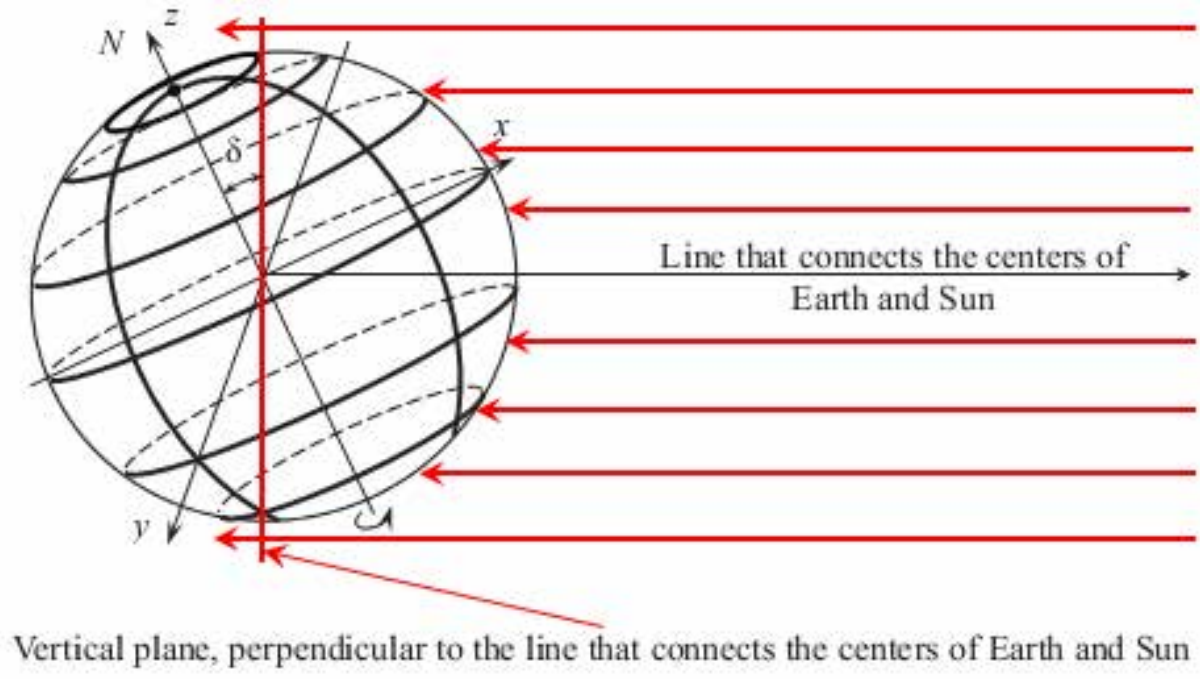


**Fig. 14.19. Diagram of the Earth in a parallel stream of sunlight**

Having determined the daily efficiency of the installation of photovoltaic modules for each day of the year and for each type of installation at the latitude $\varphi$=50°, the value of the annual efficiency of their installation was obtained. This value is the weighted average annual value of the cosine of the angle of incidence of the sun's rays on the plane of the solar panel. The results of these calculations are shown in fig. 14.20.

This confirms the fact, proven by many experimental studies that the angle of inclination of stationary photovoltaic modules to the horizon in the first approximation should correspond to the latitude of the area where they are installed.

The results of studies on the calculation of the installation efficiency of photovoltaic modules showed that tracking in the vertical plane for photovoltaic modules installed at any latitude would have an installation efficiency of 50 %. This is only 2.07 % more than for stationary photovoltaic modules. This indicates the impracticality of using photovoltaic modules with tracking in the vertical plane.

At the same time, the analysis of the research results reveals that the installation efficiency of photovoltaic modules with tracking in the horizontal plane (rotation of the photovoltaic modules in the horizontal plane to track the Sun along the horizon) for the photovoltaic modules installed at an arbitrary latitude, will have an installation efficiency of 97.93 %. This is 2.07 % less than for photovoltaic modules installed with the possibility of full tracking (turning of photovoltaic modules in vertical and horizontal planes to track the Sun along the horizon and in height).

This may indicate the impracticality of using photovoltaic modules with full tracking and its replacement by tracking in the horizontal plane, which simplifies the system of controlling the rotation of photovoltaic modules.

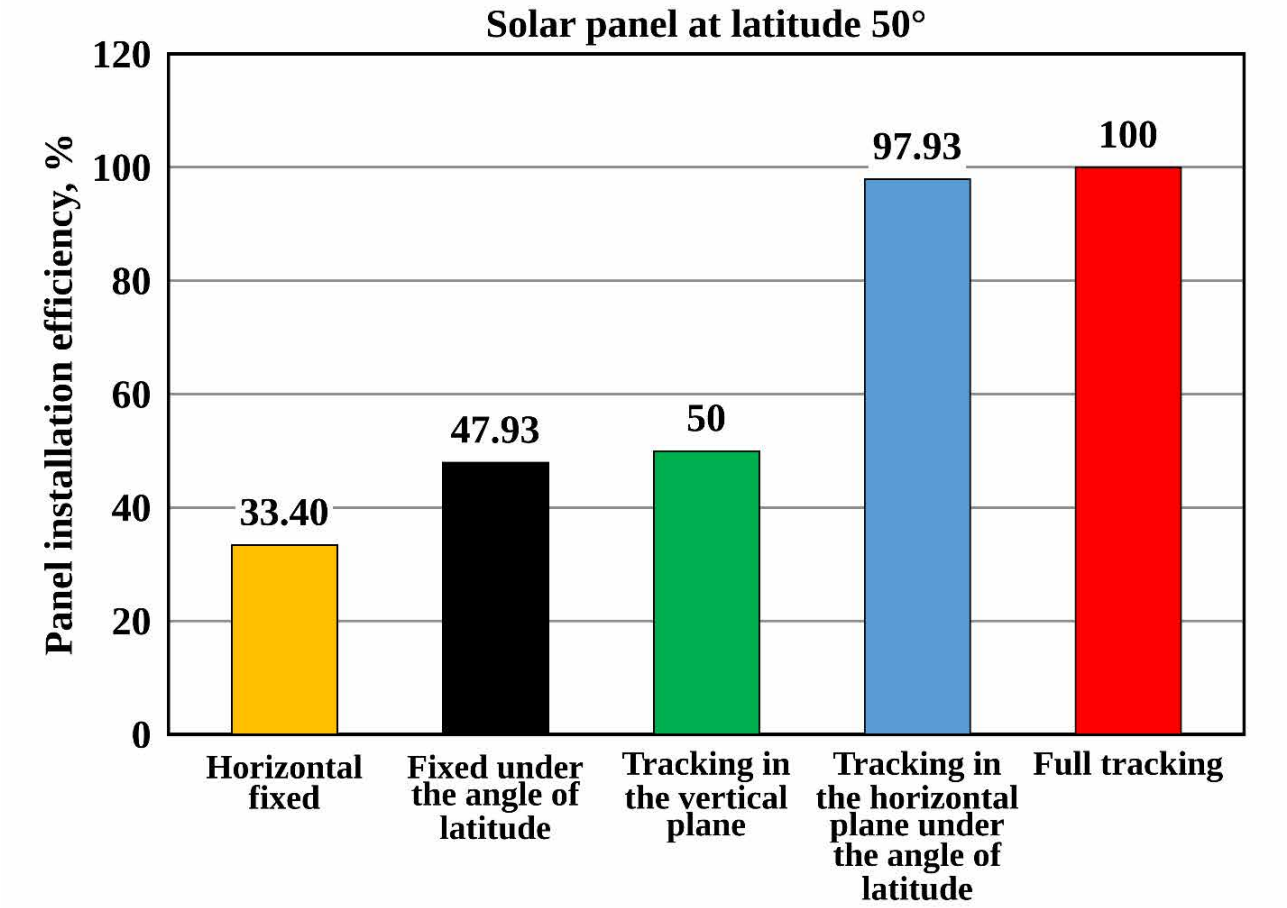


**Fig. 14.20. Annual efficiency of installation of photovoltaic modules**

Thus, the majestic power that a photovoltaic station produces depends on the angle of its installation, which depends on the time of day, coordinates (longitude and latitude) of the station's location, and the time of year.

One of the solutions to ensure an optimal angle value is to install photovoltaic panels on a rotary platform that has degrees of freedom in two planes, the so-called solar tracker (fig. 14.21).

The option of installing photovoltaic models on the tracker has a number of advantages, including increasing the operating time of a solar power plant per day and increasing the amount of energy produced. However, the high cost hinders the development of tracker systems. Therefore, photovoltaic modules are often installed either fixed or so that it is possible to change the angle of inclination several times a year.

Practical experience has made it possible to determine the rational values of a fixed angle of installation of photovoltaic modules, in particular if the latitude of installation of a solar power plant is between 25° and 55° north latitudes (N lat.), multiply the numeric latitude value by 0.76, and add 3.1°. In latitude, the territory of Ukraine extends from the northernmost point, the Petrovske tract near the village of Hremiach, Novhorod-Siverskyi District, Chernihiv Region (52°20'04" N lat.), to the

southernmost point, Cape Sarych in Sevastopol (44°23′11″ N lat.).

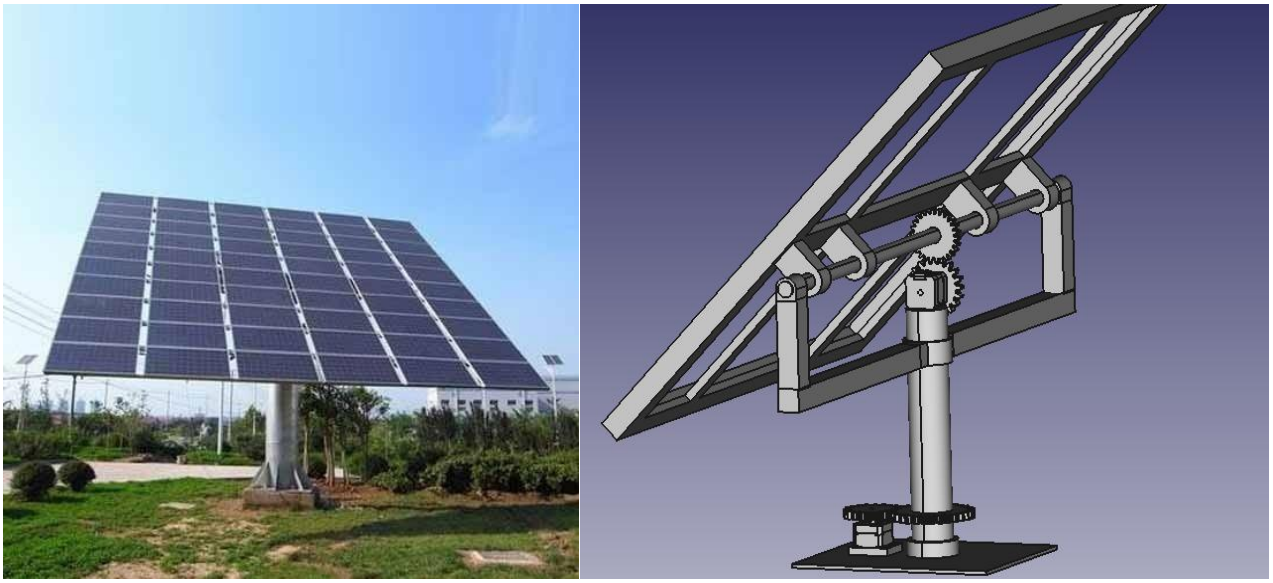

**a**) **b**)

**a – appearance, b – diagram illustrating the degree of freedom of the tracker in two planes**

**Fig. 14.21. Solar power plant of Polissia National University**

According to the above empirical calculation, the fixed installation angle of photovoltaic modules, for example, for the latitude of Kyiv (50°27'00" N lat.) will be approximately 40° (fig. 14.22).



**Fig. 14.22. General view of a 10 kW solar power plant with a fixed angle of installation of photovoltaic panels of 40° (Makhnivka village, Koziatyn district, Vinnytsia region, 49°43'19"N lat.)**

If the structure on which the photovoltaic modules are installed has a variable angle of inclination of the installation of photovoltaic panels, then at a latitude between 25° and 50° it is necessary to take the following values: for the summer period, the

latitude value is multiplied by 0.93 and subtract 21°, and for the winter period, the latitude value is multiplied by 0.875 and add 19.2°.

The recommended time to set the tilt angle for the summer period is March 30, and for the winter period – September 12. In this case, for the latitude of Kyiv, the installation angle for the summer period will be 25°, and for the winter period – 63°.

### 14.4. Solar PV power plants developed for University of Castilla-La Mancha

We have summarized the main characteristics and operational efficiency of 6 solar power plants designed for the self-consumption of each supply point at the University of Castilla-La Mancha (Spain), as shown in Table 14.3 and Fig. 14.23.




**Fig. 14.23. Photos of the solar PV power plants (Campus TO) developed at the University of Castilla-La Mancha (Spain).**

Fig. 14.24 describes with lines the monthly electricity consumption at the University of Castilla-La Mancha, from 2021 to 2025. Each color represents each year. In 2024 and 2025, two different line types are included, rigid for the total consumption (as in the previous years) and dotted for the electricity consumption paid to the energy retailer, i.e., the difference between the rigid and the dotted line is due to the electricity generated by the solar PV power plants. Therefore, this figure also includes bars for the monthly generation of solar PV of the 6 power plants implemented at the University. In total, in 2024 and 2025, 328 MWh and 1.302 MWh, respectively, were generated by all the solar PV power plants, which represent 2% (2024) and 7% (2025)

of the total yearly electric energy consumed at the University.

**Table 14.3. Characteristics of the 6 solar PV power plants developed at the University of Castilla-La Mancha (Spain)**

| Campus | Operation start date | Nominal power (kW) | Peak power (kW) | Tender Budget | Awarded projec |
|---|---|---|---|---|---|
| | | | | without taxes (€) | |
| TO | April-2024 | 320 | 339.35 | 338,182 | 263.000 |
| AB | October-2024 | 550 | 637.42 | 478,069 | 398.961 |
| CU | May-2025 | 200 | 240.9 | 158,995 | 112.566 |
| CU | May-2025 | 100 | 128.15 | 97,394 | 65.432 |
| TO | Sept-2025 | 50 | 61.77 | 45,981 | 31.063 |
| AB | Sept-2025 | 50 | 49.56 | 36,785 | 27.411 |
| **UCLM Total** | | **1,270** | **1,457.15** | **1,155,406** | **898.433** |

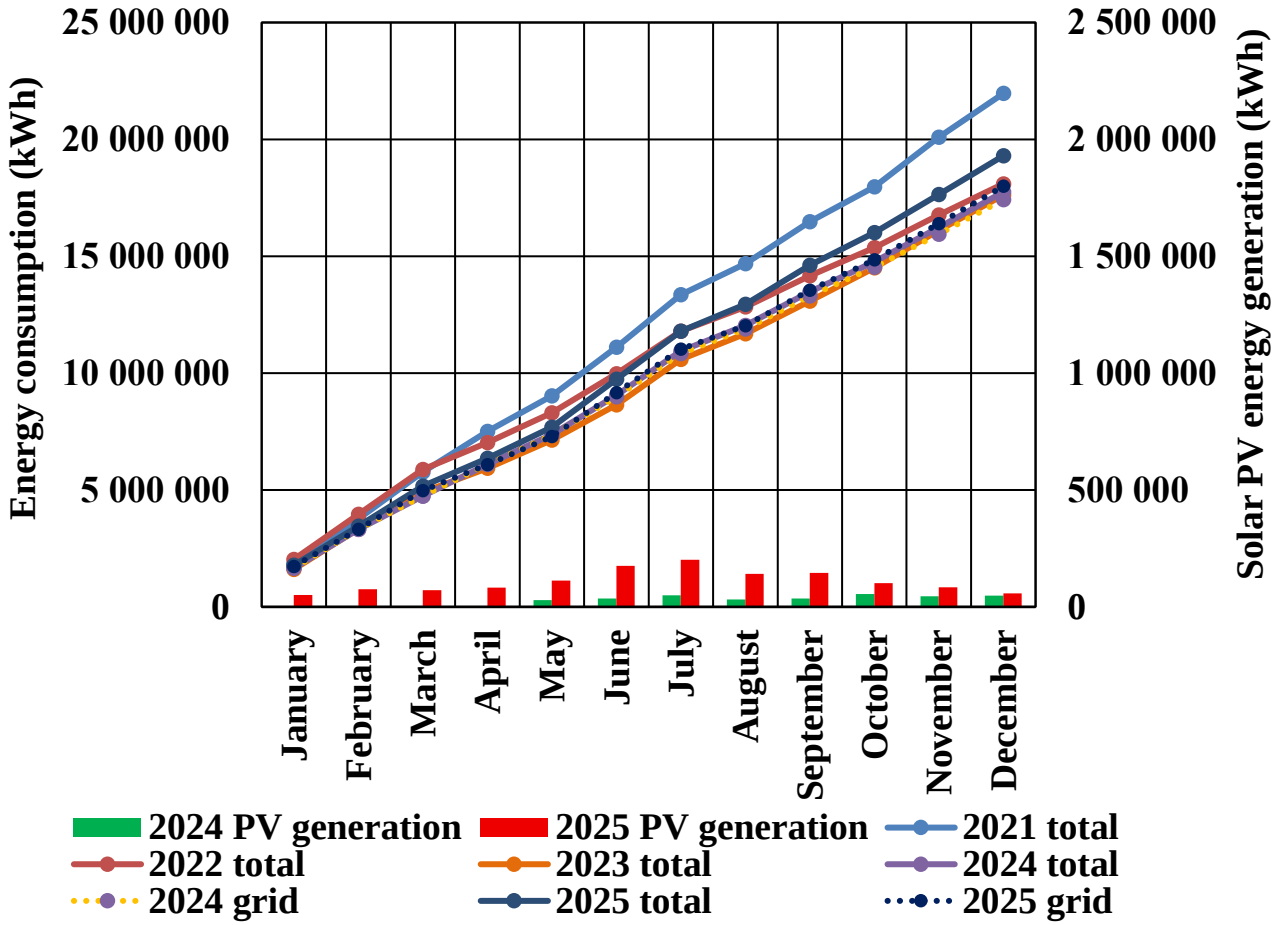


**Fig. 14.24. Monthly consumption and solar PV generation of the 6 solar power plants developed at the University of Castilla-La Mancha (Spain) from 2021 to 2025**

In addition to the global data shown in Fig 14.24, which corresponds to the whole University of Castilla-La Mancha, it is also quite interesting to analyse one of the PV power plants individually. For this reason, Fig. 14.25 shows the monthly solar PV generation, as well as the demand coverage rate, of the largest PV plant developed, i.e.,

the plant developed at the AB Campus – 637.42 kW (see Table 14.3). The real monitored data in 2024 and 2025 is shown together with the theoretical data estimated in the Project. In 2025, 673 MWh have been generated with this solar PV power plant, representing 29% of the demand coverage at this electricity supply point, which has supposed 82.482 € saved. Therefore, the payback period for this PV power plant is from 5 to 6 years.

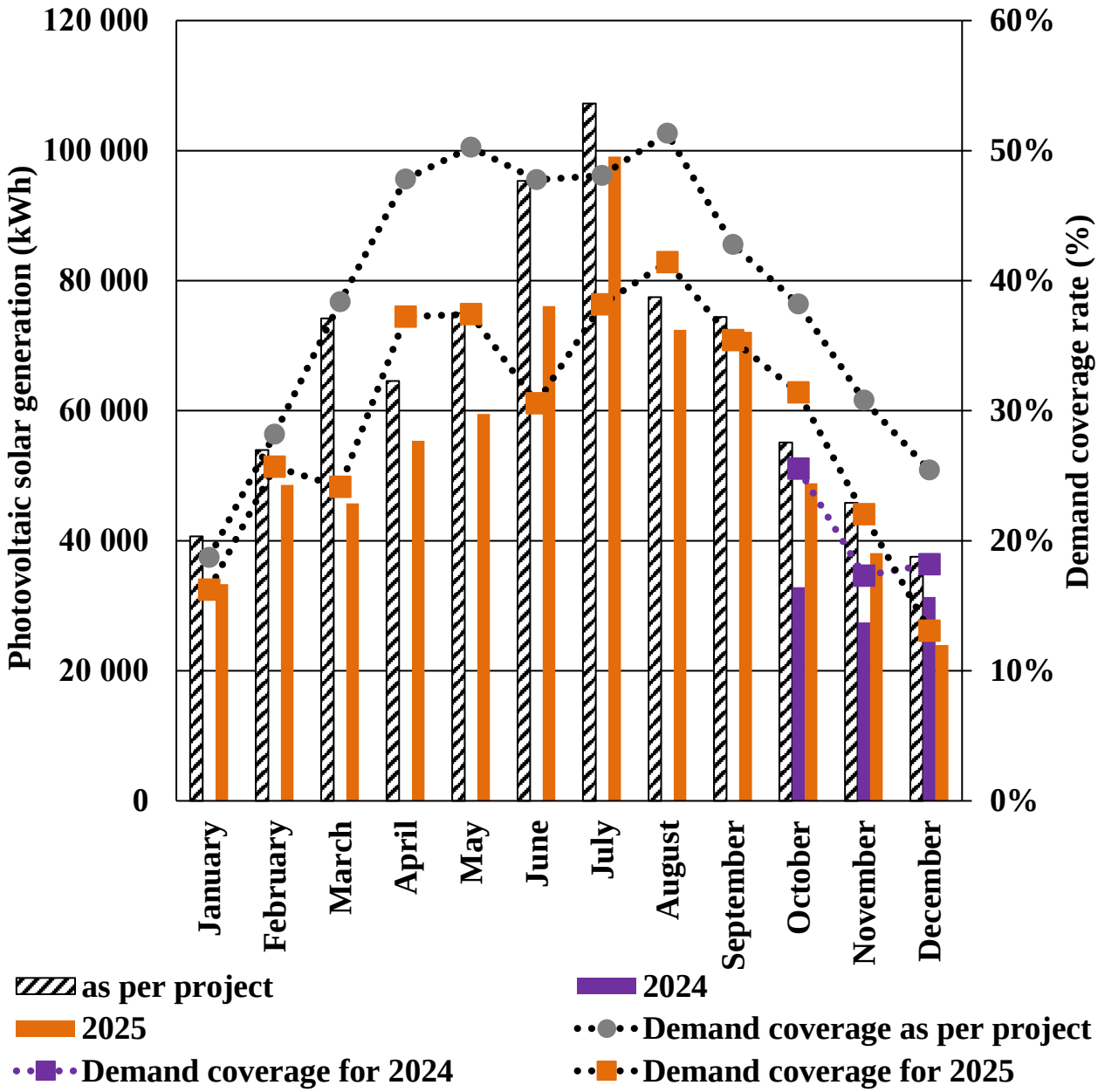


**Fig. 14.25. Monthly solar PV generation and demand coverage of the largest PV plant developed at the University of Castilla-La Mancha (Spain)**

## 14.5. Agrivoltaic

Agrivoltaic or agrihpotovoltaic is the simultaneous use of agricultural fields, both for the production of solar photovoltaic energy and for agricultural production, in particular crop production. It is also possible to imagine agrivoltaic as a combination

of agricultural land use with the production of electric energy using photovoltaic technology. Thus, agrivoltaic is the cultivation of plants under solar panels. In fig. 14.26 an example of using, the agrivoltaic system for growing grapes is given, and in fig. 14.27 – for growing cereals and other crops (fig. 14.28). The main feature of such use of solar energy is its rational division between the above methods of such use. Therefore, agrivoltaic requires finding a compromise between obtaining a high-quality crop and energy production.



**Fig. 14.26. Using the agrivoltaic system for growing grapes [source: https://www.youtube.com/watch?v=_czz2SrKRSQ&t=278s]**



**Fig. 14.27. Using the agrivoltaic system for growing grain crops [source: https://www.youtube.com/watch?v=_czz2SrKRSQ&t=278s]**

The pioneers of agrivoltaic are considered German scientists Adolf Goetzberger and Armin Zastrow, who developed the concept of agrivoltaic in 1981, although the

term itself became widely used in the early 21st century.

There are already experimental fields in the world where plants are grown and simultaneously it is received up to 1 thousand MW of electricity based on solar panels.

Recently, in Europe and Asia, a clear concept of special use of photovoltaic systems based on the use of solar panels placed at a height of at least 5 m above the field surface has been formed, which allows agricultural machinery to work in the fields.



**Fig. 14.28. General view of a solar power plant located on agricultural crops in the municipality of Kula in northern Serbia [source: https://therecursive.com/serbia-to-launch-largest-agrivoltaic-project-in-the-balkans/]**

In addition, the shadow created by such a system can reduce the productivity of agricultural crops, but this can be compensated by additional energy production. Another practice of agrivoltaic is the installation of solar panels on roofs of greenhouses or near them (fig. 14.29). Agrivoltaic is also considered grazing animals in the shade of solar panels.

During the dry summer in such systems, it is possible to get a higher yield than with conventional cultivation of field crops. An objective prerequisite for increasing yields is a decrease in the evaporation of moisture by plant leaves during dry periods. After all, the intensity of photosynthesis increases with increasing illumination to a certain limit, after reaching which plants begin to protect themselves from extreme heat by additional evaporation of water by leaves. The soil under solar panels is wetter, which increases the efficiency of irrigation. Panels protect plants from strong wind, hail, and heat, and improve working conditions.



**Fig. 14.29. General view of a solar power plant located in a greenhouse facility in Ohio, USA [source: www.agri.bg, photo: Thibault Frisson]**

The general view of the structures of the agrovoltaic systems we studied is shown in Fig. 14.30.

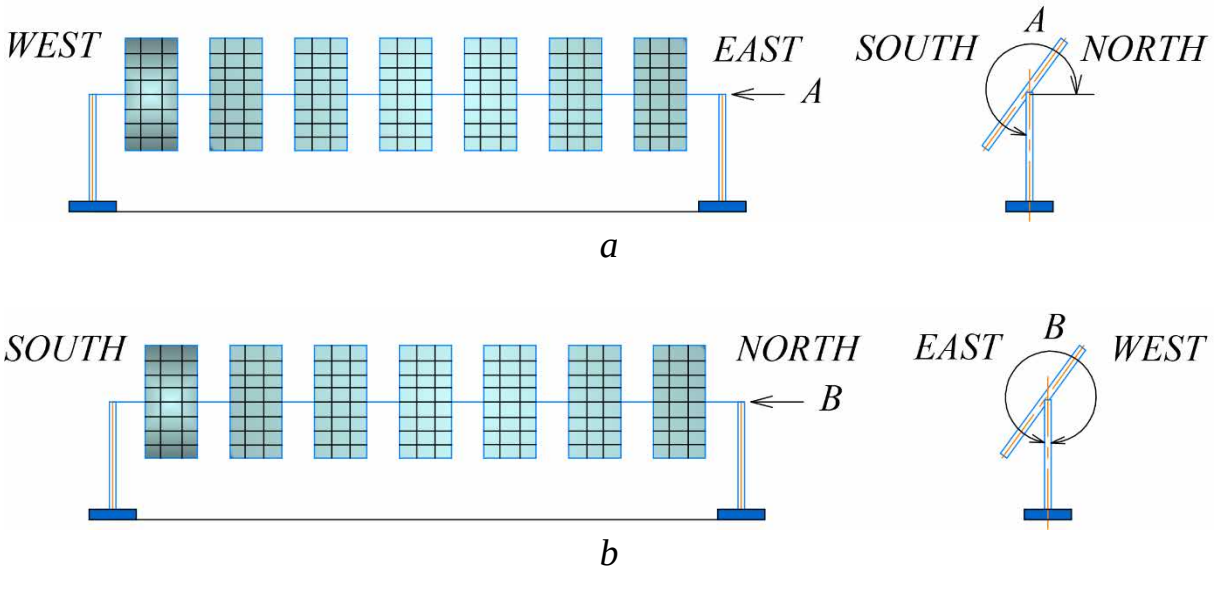

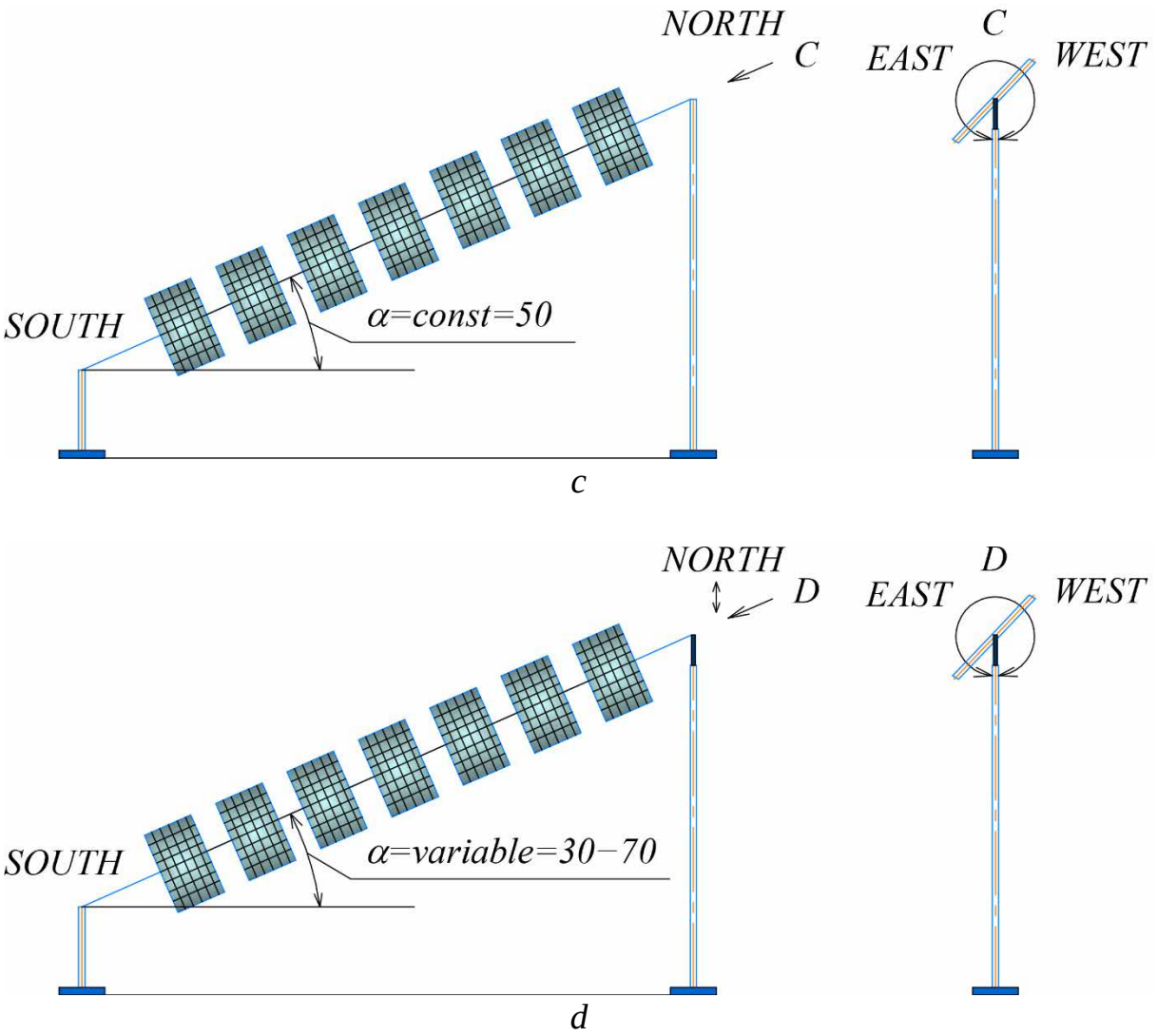


**Fig. 14.30. Schematics showing the studied structures of agrivoltaics systems depending on the orientation of the axis of rotation of photovoltaic modules: *a* – horizontal axis, direction "East-West"; *b* – horizontal axis, direction "North-South"; *c* – axis installed at an angle of latitude, direction "North-South"; *d* – axis installed with the possibility of adjustment in the vertical plane, direction "North-South"**

The dependence of the tracking efficiency of photovoltaic modules in photovoltaic and agrivoltaics systems on the structure of these systems is shown in Fig. 14.31.

It has been found that the tracking efficiency of an agrivoltaics system with a horizontal axis of rotation and an East West orientation of the axis of rotation is 34.75%; for the agrivoltaics system with a North-South orientation – 52.89%. The tracking efficiency of the agrivoltaics system with a North South orientation and an axis of rotation set at a latitude angle (50°) is 67.95%, and with the axis of rotation set in such a way that the photovoltaic modules track the flow of sunlight also in the vertical plane – 69.5%.

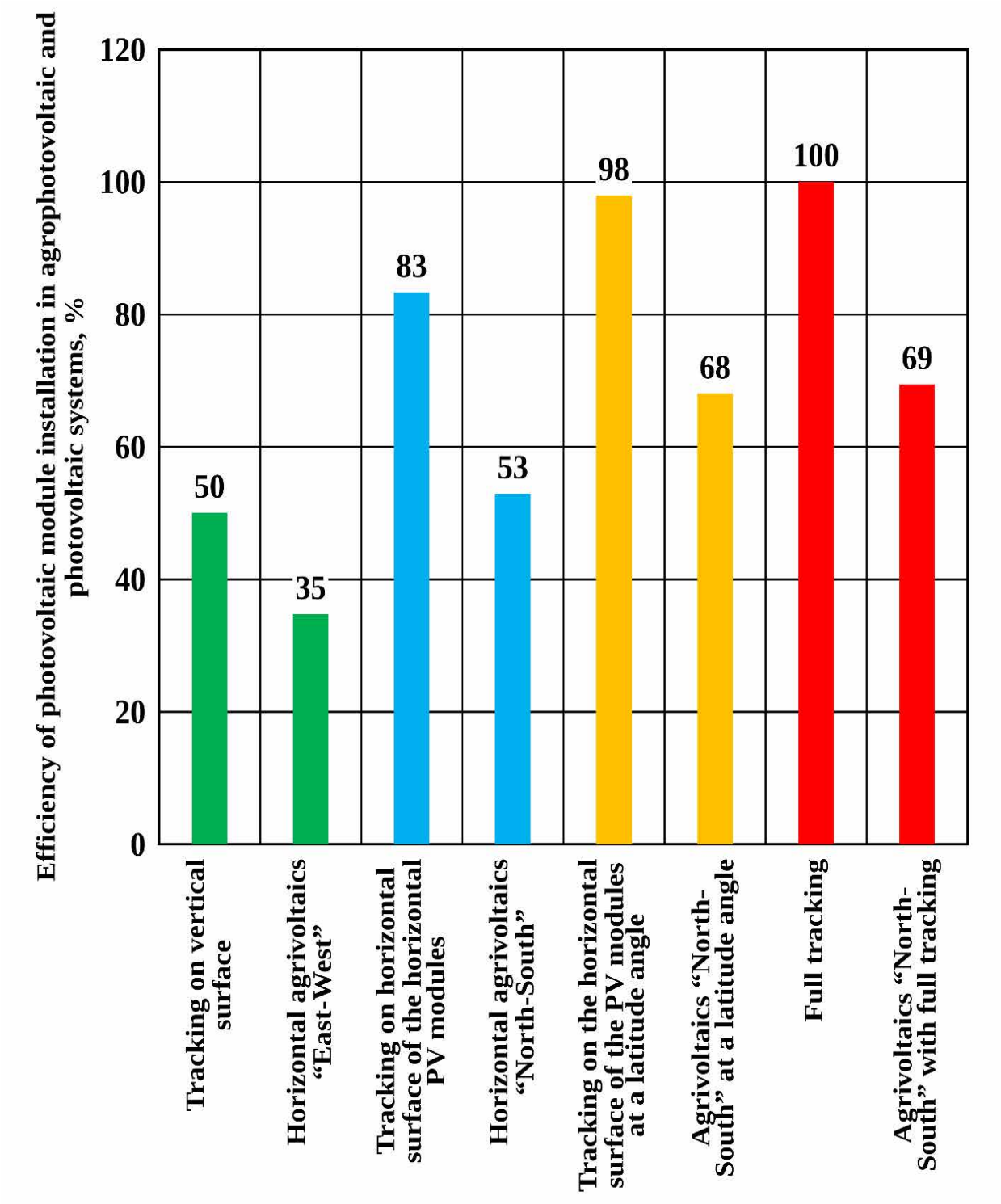


**Fig. 14.31. Dependence of tracking efficiency of photovoltaic modules in photovoltaic and agrivoltaics systems on the structure of these systems**

It is obvious that for such systems it is necessary to create appropriate electrified sets of equipment for sowing and growing field crops and harvesting.

**Questions for self-assessment:**

1. What areas are included in the solar energy industry?
2. What are the advantages and disadvantages of using solar energy?

3. What is the average annual amount of total solar radiation entering the territory of Ukraine?
4. What are the limits of solar cell efficiency?
5. What do you know about solar energy development programs in the world?
6. Name the factors that determine the prospects for the development of solar energy in Ukraine.
7. List the priority areas for the development of solar energy in Ukraine.
8. Explain the design of a solar vacuum collector with a thermal tube and the principle of operation of a heat tube.
9. Explain the purpose of the vacuum collector receiver.
10. What is the purpose of using a barium gas absorber in a vacuum tube?
11. Will the vacuum collector work if one of the tubes is damaged?
12. Explain the features of vacuum collectors with direct heat transfer to the water.
13. Explain the features of vacuum collectors with direct heat transfer and integrated heat exchanger.
14. What are parabola-cylindrical reflectors used for?
15. What is the phenomenon of solar system stagnation?
16. Name the components of the solar heat supply system.
17. How to reduce the negative impact of stagnation on the solar system?
18. Explain the structure of flat collectors.
19. Describe the features of the optical coating of a flat collector.
20. Name the disadvantages of flat collectors.
21. What determines the value of the total heat flow entering the heat carrier in a flat solar collector?
22. What components does the solar radiation flux absorbed by the receiver panel have?
23. How to determine the optimal orientation of the solar collector?
24. What values of the orientation and tilt angles of the solar collector allow achieving the greatest energy output?
25. Explain the features of collector concentrators.
26. How does the time of year affect the structure of the solar system?
27. What technologies are used to generate electricity as a result of solar energy conversion?
28. Explain the principle of solar panels operation.
29. What causes the heterogeneity of the color and structure of polycrystalline panel elements?
30. What are the application features of thin-film solar panels?
31. Compare the advantages and disadvantages of mono - and polycrystalline solar panels.
32. Name the components of a typical solar power supply system.
33. What determines the amount of the solar radiation that falls on an inclined plane?
34. Describe the angle of direct solar radiation.
35. Describe the angle that determines the solar altitude.

36. Describe the angle between the photovoltaic module installation plane and the horizontal plane.

37. Describe the azimuth of solar panel installation.

38. Describe the angle of incidence of the sun's rays.

39. At what angle to the horizon is it advisable to install the solar panels in Ukraine?

40. How solar power is measured and what is its value?

41. What is the recommended setting time and tilt angle for the summer and winter periods for the latitude of Kyiv?

**References:**


1. Atlas of the energy potential of renewable energy sources of Ukraine / ed. S. O. Kudrya. 3rd ed., updated. Kyiv : Institute of Renewable Energy of the NAS of Ukraine, 2024. 56 p.
2. Best research-cell efficiency chart / National Renewable Energy Laboratory. URL: https://www.nrel.gov/pv/cell-efficiency.html (date of access: 23.12.2025).
3. Draganov B. Kh., Ishchenko V. V., Shelimanova O. V. Operation of thermal power plants and systems : textbook. Kyiv : Agrarian Education, 2009. 230 p.
4. Dudyuk D. L., Mazepa S. S. Unconventional (renewable) energy sources : textbook. Lviv : RVV UkrDLTU, 2004. 68 p.
5. Dudyuk D. L., Mazepa S. S., Gnatishin Ya. M. Unconventional energy – the basics of theory and problems : textbook. Lviv : Magnolia 2006, 2008. 188 p.
6. Golub G. A., Blažauskas E., Tsyvenkova N. M., Šarauskis E., Jasinskas A., Kukharets S. M., Nadykto V., Holubenko A. A. Determination of the installation efficiency of vertical stationary photovoltaic modules with a double-sided “East–West”-oriented solar panel. *Applied Sciences*. 2025. Vol. 15, Iss. 3. Article 1635.
7. Golub G. A., Kukharets S. M., Chuba V. V., Marus O. A. Production and use of biofuels in agroecosystems. Mechanical and technological bases : monograph. Kyiv : NULES of Ukraine, 2018. 254 p.
8. Golub G. A., Tsyvenkova N. M., Rogovskii I., Chuba V. V., Nadykto V., Omarov I., Yarosh Y. D., Chuba I. Determining the influence of design features in agrivoltaics systems on tracking efficiency. *Eastern-European Journal of Enterprise Technologies*. 2025. Vol. 3, No. 8 (135). P. 14–22.
9. Golub G. A., Tsyvenkova N. M., Yaremenko O., Marus O. A., Omarov I., Holubenko A. A. Determining the efficiency of installing fixed solar photovoltaic modules and modules with different tracking options. *Eastern-European Journal of Enterprise Technologies*. 2023. Vol. 4, No. 8 (124). P. 15–25.
10. Goswami D. Y. Principles of solar engineering. 3rd ed. Boca Raton : CRC Press, 2015. 801 p.
11. Handbook of photovoltaic science and engineering / ed. by A. Luque, S. Hegedus. Chichester : John Wiley & Sons, 2003. 1138 p.
12. Heat engineering : textbook / B. Kh. Draganov, O. S. Bessarab, A. A. Dolinsky et al. ; ed. by B. Kh. Draganov. 2nd ed., revised and enlarged. Kyiv : INKOS, 2005. 400 p.

13. Home systems / SMA Solar Technology AG, Danfoss. URL: http://www.sma.de/en.html (date of access: 11.12.2024).

14. Honrubia-Escribano A., Ramirez F. J., Gómez-Lázaro E., Garcia-Villaverde P. M., Ruiz-Ortega M. J., Parra-Requena G. Influence of solar technology in the economic performance of PV power plants in Europe. A comprehensive analysis. *Renewable and Sustainable Energy Reviews*. 2018. Vol. 82, Part 1. P. 488–501.

15. Jäger K., Isabella O., Smets A. H. M., van Swaaij R. A. C. M. M., Zeman M. Solar energy : fundamentals, technology, and systems. Delft : Delft University of Technology, 2014. 408 p.

16. Kalogirou S. A. Solar energy engineering : processes and systems. 2nd ed. Amsterdam : Elsevier ; Academic Press, 2014. 819 p.

17. Kudrya S. O., Golovko V. M. Basics of designing power plants with renewable energy sources. Kyiv, 2009. 201 p.

18. Photovoltaic Geographical Information System (PVGIS) / European Commission, Joint Research Centre. URL: https://re.jrc.ec.europa.eu/pvg_tools/en/ (date of access: 12.01.2026).

19. Photovoltaics, a driving force for industrialisation : annual report 2025 / Unión Española Fotovoltaica (UNEF). Spain, 2025. URL: https://www.unef.es/es/descargar-documento/56087007ae818ed31de8df4af36607f5 (date of access: 11.11.2025).

20. Pinchuk A. S. Use of solar collectors. Selection and calculation. *Thermometer*. 2008. No. 1. P. 29–37.

21. Renewable energy sources / ed. S. O. Kudrya. 2nd ed., supplemented. Kyiv : Institute of Renewable Energy of the NAS of Ukraine, 2024. 492 p.

22. Schemes of solar installations. *Thermometer*. 2010. No. 6. P. 34–46.

23. Skydan O. V., Golub G. A., Kukharets S. M., Yarosh Y. D., Chuba V. V., Medvedskyi O. V., Tsyvenkova N. M., Sokolovskyi O. F., Kukharets V. V. Renewable energy in agricultural production : textbook. Kyiv ; Zhytomyr : NULES of Ukraine ; ZhNAEU, 2018. 320 p.

24. Solar panels and features of use / PrelProm. URL: http://prel.prom.ua/a156550-sonyachn-batareyi-printsip.html (date of access: 14.04.2025).

25. The future of solar energy : an interdisciplinary MIT study / R. Schmalensee et al. Cambridge (MA) : Massachusetts Institute of Technology, 2015. 356 p.

26. Types of solar collectors / Atmosfera. URL: http://www.atmosfera.ua/geliosistemy/tipy-solnechnyx-kollektorov/ (date of access: 08.08.2025).

27. Vatankhah Ghadim H., Haas J., Breyer C., Gils H. C., Read E. G., Xiao M., Peer R. Are we too pessimistic? Cost projections for solar photovoltaics, wind power, and batteries are over-estimating actual costs globally. *Applied Energy*. 2025. Vol. 390. Article 125856.

28. Verduurzaming stroomvoorziening / De Groene Energie Maatschappij. URL: http://www.dgem.nl/nl/nieuws/2014/04/verduurzaming-stroomvoorziening-vs-zet-door (date of access: 05.04.2022).

## 15. PRODUCTION AND USE OF GREEN HYDROGEN

**Lecture Plan:**


**15.1. General characteristics of hydrogen and methods of its production 378**
**15.2. Production of biohydrogen by thermochemical method 382**
**15.3. Production of biohydrogen by fermentation 387**
**15.4. Green hydrogen storage and use 390**
**15.5. Fuel cells 393**


### 15.1. General characteristics of hydrogen and methods of its production

Hydrogen ($H_2$, Hydrogenium) is the gas with the lowest atomic weight and the most abundant element in the universe (about 92% of all atoms). Scientists have found that hydrogen is the main component of stars and interstellar gas.

Almost all of the hydrogen on Earth is in the form of compounds. Hydrogen is a part of almost all organic substances and is present in all living cells. In living cells, hydrogen accounts for almost 50% of the number of atoms.

Hydrogen (fig. 15.1) is the lightest diatomic gas, which under normal conditions is characterized by a complete absence of smell, color and taste. Together with air or oxygen, this gas forms a flammable and explosive mixture.

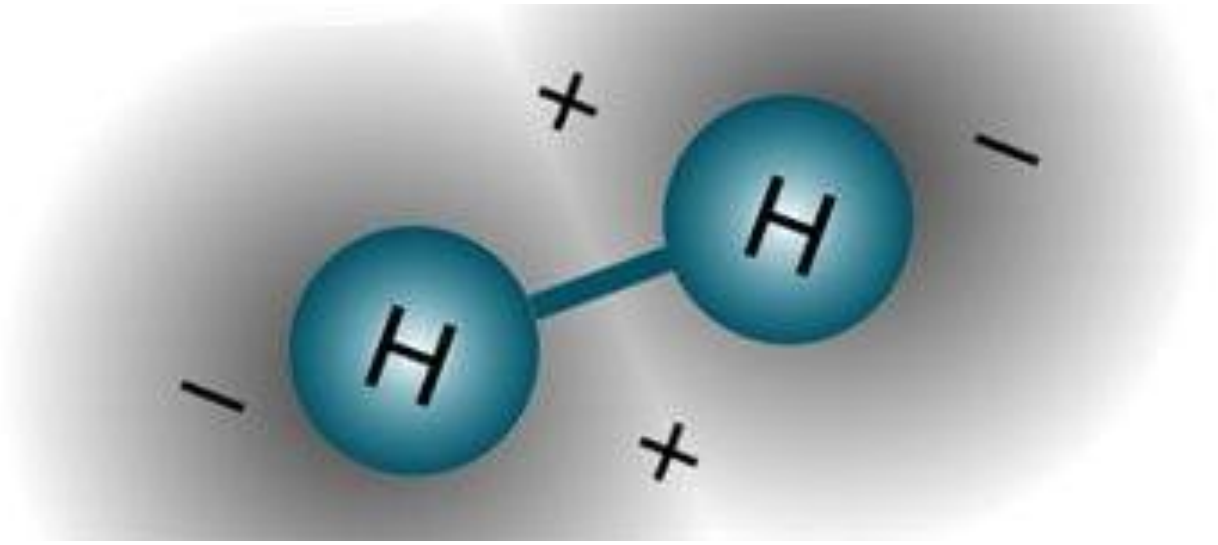


**Fig. 15.1. Schematic representation of a hydrogen gas molecule [source: https://techworld.idg.se/2.2524/1.284362/kvantdator-gor-kemisk-simulering]**

The release of a combustible gas by the interaction of acids and metals was first described by the English physicist and chemist Henry Cavendish in 1766, who called this gas "combustible air". French chemist Antoine Lavoisier found that "combustible air" is part of water and can be obtained from water. Lavoisier gave the "combustible air" the name hydrogène – the one that "gives birth" to water.

Under normal conditions, the density of hydrogen is 0.08987 g/l, the boiling point is -252.76°C, the specific calorific value is 120.9×106 J/kg, hydrogen is slightly

soluble in water – 18.8 ml/l.

Hydrogen is almost all in the form of compounds, so chemical reactions are used to produce it. In particular, decomposition reactions can be used.

One of the known methods for producing hydrogen is the decomposition of water by electric current (electrolysis) (fig. 15.2).

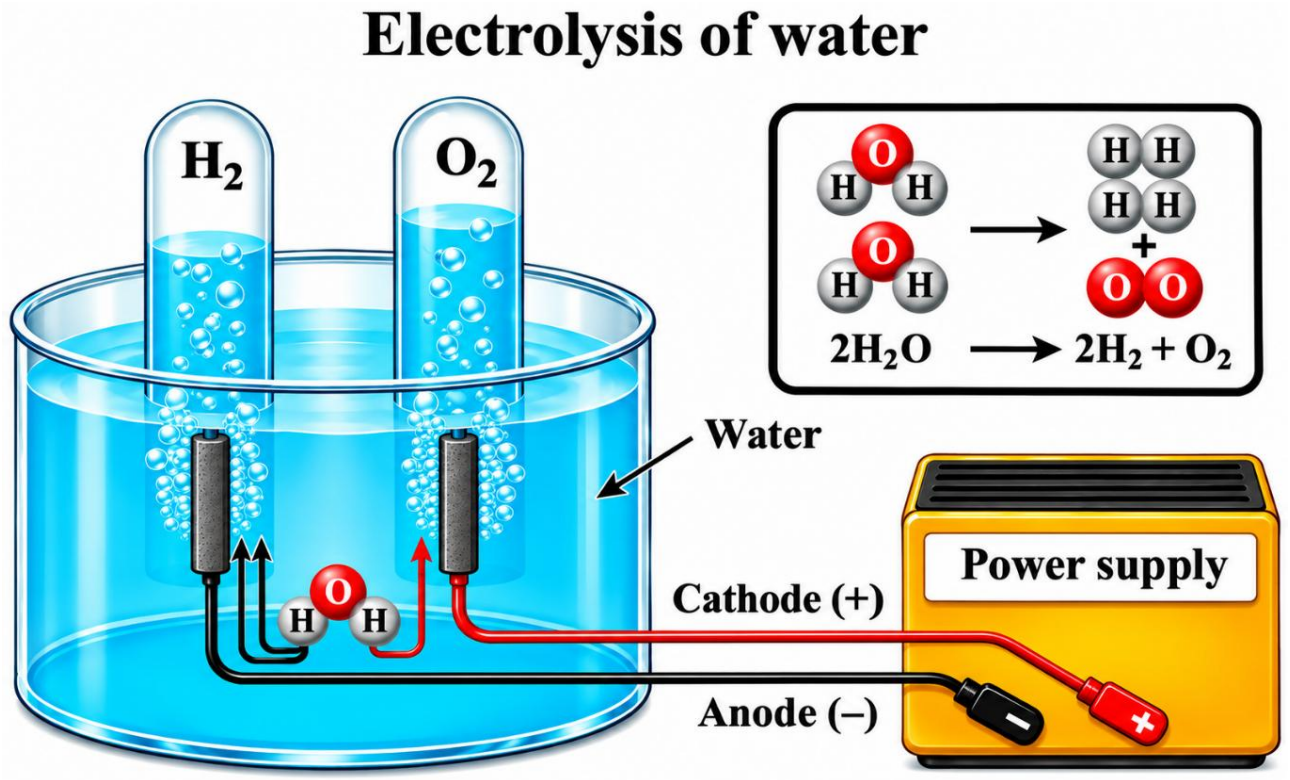


**Fig. 15.2. Schematic representation of the process of producing hydrogen and oxygen as a result of electrolysis of pure water**

Basic industrial methods for producing hydrogen:

– electrolysis of aqueous solutions of salts:

$$2NaCl+2H_2O \rightarrow H_2\uparrow+2NaOH+Cl_2; \quad (15.1)$$

– transmission of water vapor over hot coke at a temperature of about 1000°C:

$$H_2O+C \rightarrow H_2+CO; \quad (15.2)$$

– from natural gas, as a result of conversion with water vapor at a temperature of about 1000°C:

$$CH_4+H_2O \rightarrow CO+3H_2; \quad (15.3)$$

– catalytic oxygen oxidation:

$$2CH_4+O_2 \rightarrow 2CO+4H_2. \quad (15.4)$$

The most common water electrolysis schemes are shown in Fig. 15.3.

In a proton exchange membrane electrolyzer (PEM) water electrolyzers, polysulfonated membranes (generally Nafion and Fumapem) are utilized as the electrolyte (proton conductor). The PEM electrolyzers have a lot of benefits including high efficiency, high proton conductivity, high current density, fast response, low thickness, low permeability, operation at high pressure and low temperature (20ºC −

80ºC), compact design, etc. From the environmental perspective, the PEM electrolyzer is considered a top choice because of its ability for ultrapure hydrogen production. The other special characteristic of the PEM is its easy balancing, making it a favorable choice for industrial uses. However, the PEM electrolyzer has a major drawback of high investment and maintenance costs, which limits the applications of the PEM electrolyzer.

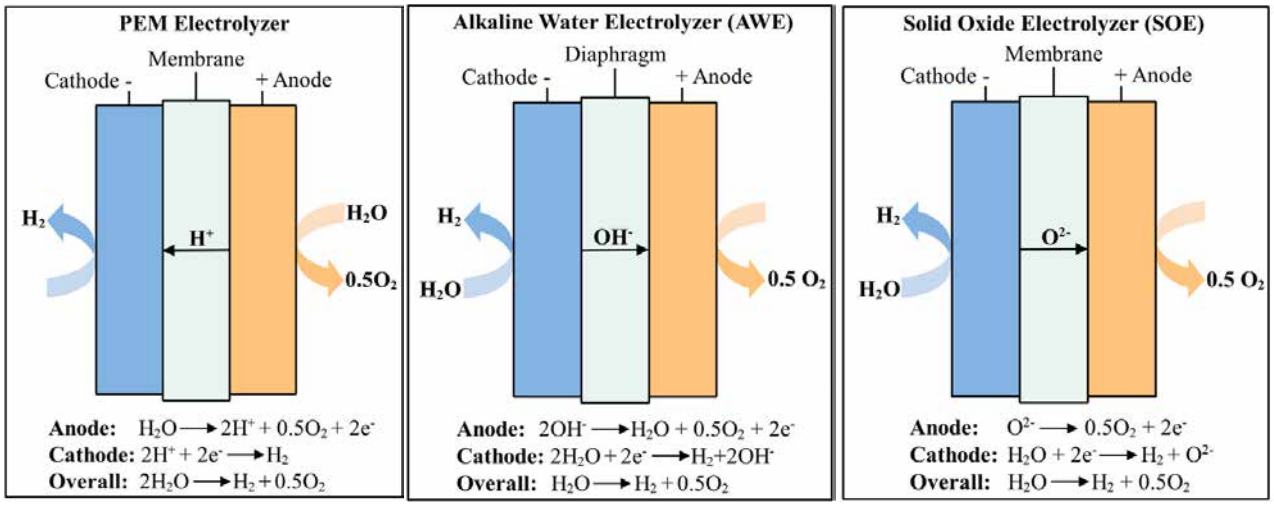


**Fig. 15.3. Schematic of a proton exchange membrane electrolyzer (PEM), of the alkaline water electrolyzer (AWE), and of the solid oxide electrolyzer (SOE)**

The alkaline water electrolyzer (AWE) works at low temperatures (30ºC − 100ºC) by using the electrolytes with an aqueous solution (KOH/NaOH) and a concentration of 20% − 30%. The major drawbacks of the AWE are low efficiency, operation with low pressure, and restricted current density (400 mA/cm$^2$). An asbestos diaphragm and nickel materials are the most common electrolytes in AWEs. Firstly, at the cathode side of the AWE, two molecules of the solution are broken into two hydroxyl ions ($OH_2$) and one hydrogen ($H_2$). The generated hydrogen is removed from the cathode side to reintegrate in a gas form and the $OH_2$, using the power circuit, moves between the anode and cathode sides over a porous diaphragm to the anode, where it is split into half a molecule of $O_2$ and an $H_2O$ molecule. Finally, the oxygen is reintegrated at the electrode surface and released as hydrogen.

In recent years, the solid oxide electrolyzer (SOE) has attracted great attention due to its ability to produce pure hydrogen with high efficiency. Unlike the PEM and AWE, the SOF is a high-temperature water electrolyzer, which operates at a temperature range of 500ºC − 800ºC with higher efficiency, and water is injected into it as steam. Generally, the $O^{2-}$ conductors that are made up of nickel/yttria stabilized zirconia are utilized in the SOE. However, with the further development of this technology in recent years, some ceramic proton-conducting materials are used in the SOE systems as well. These materials improve efficiency because of their greater ionic conductivity in comparison with the $O^{2-}$ conductors at the working temperature range of the SOF (Liang et al., 2009). Like the PEM and AWE, the SOE has its special disadvantages, the most important of which are degradation and lack of stability.

A combined system based on a middle-grade geothermal source and parabolic trough solar collectors for hydrogen production using PEM is proposed. As shown in Fig. 15.4, an Organic Rankine Cycle (ORC) generated the power used in the PEM to produce hydrogen. This system, with energy and exergy efficiencies of 5.85% and 8.27%, respectively, for n-butane as the working fluid in ORC was able to produce 9.8 kg of hydrogen per day.

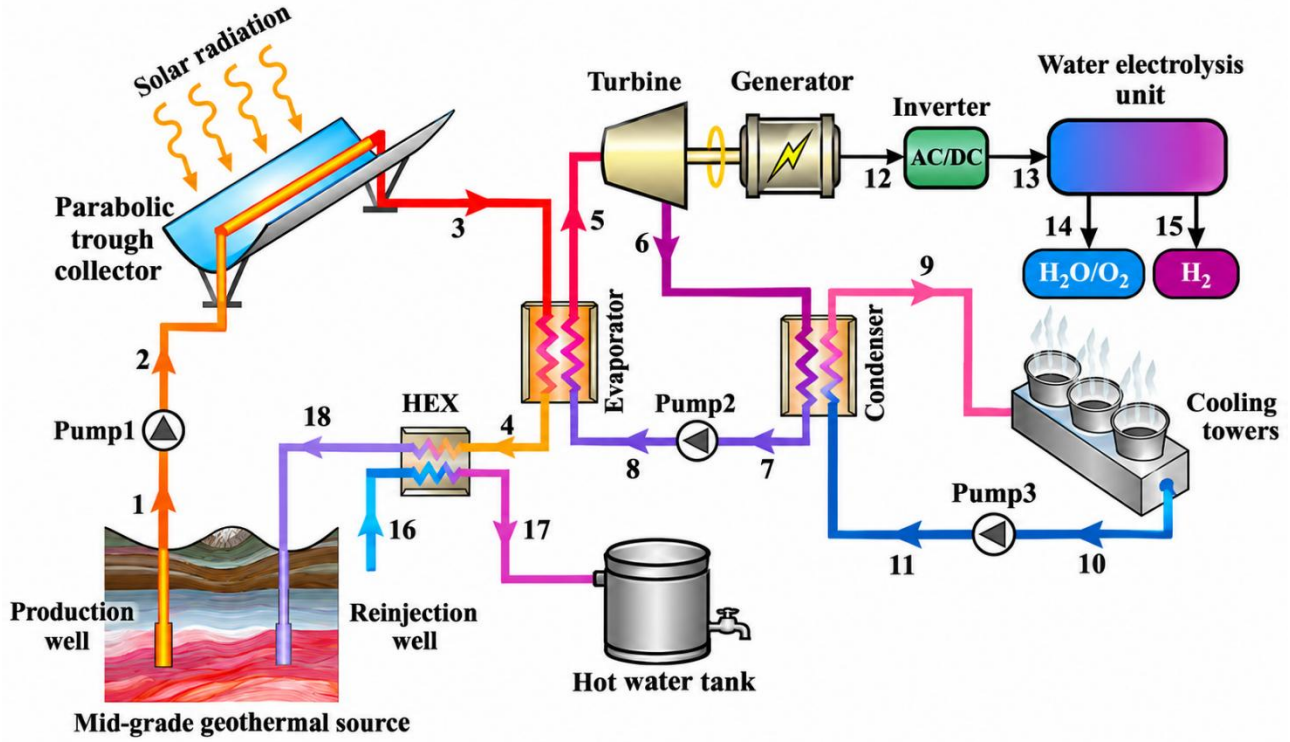


**Fig. 15.4. Schematic of an integrated system to produce hydrogen [source: Atiz, A., Karakilcik, H., Erden, M., & Karakilcik, M. Assessment of power and hydrogen production performance of an integrated system based on middle-grade geo thermal source and solar energy. *International Journal of Hydrogen Energy*, 2021, vol. 46(1), 272-288. https://doi.org/10.1016/j.ijhydene.2020.10.016]**

The main problem in using hydrogen as a promising renewable energy source is to ensure its sustainable production and storage. For commercial purposes, hydrogen is obtained from natural gas (48%) and oil (30%) in Steam conversion processes, as well as other industrial methods such as coal gasification (18%) and water electrolysis (4%). However, these processes are very energy-intensive and use non-renewable energy sources, which makes them environmentally unattractive.

Recently, the world has been developing industrial production of hydrogen based on water electrolysis using electrical energy obtained from wind farms or photovoltaic systems (fig. 15.5). The hydrogen obtained in this way is considered "green" hydrogen.

To obtain "ecological" hydrogen, it is necessary to switch to production processes that allow avoiding or minimizing $CO_2$ emissions. One of the types of raw materials for obtaining biohydrogen can be agricultural plant biomass.

To do this, it is possible to use the following methods of hydrogen production –

thermochemical and bio-fermentation.

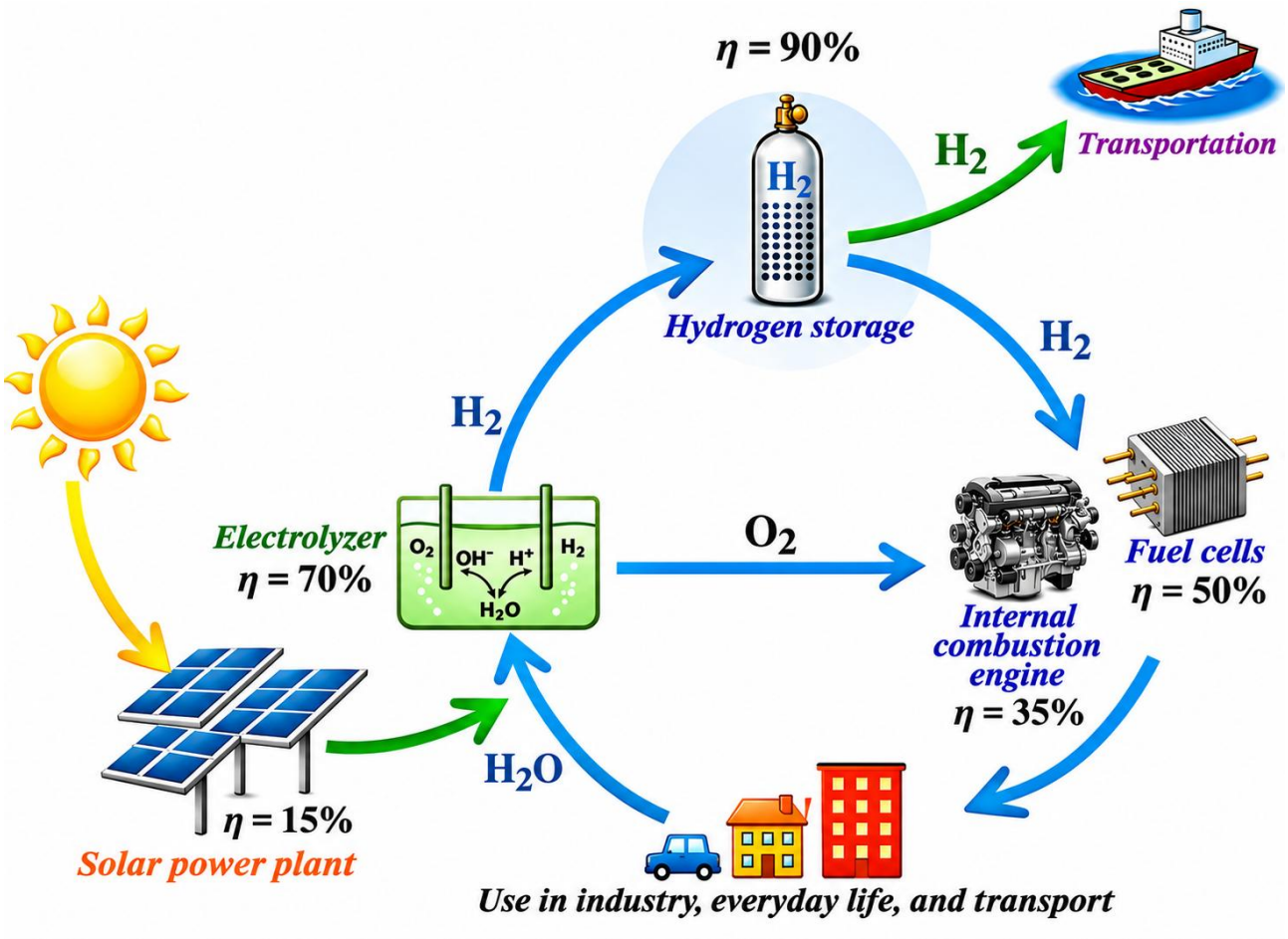


**Fig. 15.5. Example of a hydrogen production and use chain [source: https://doi.org/10.1002/adsu.201900043]**

As a result of the conducted research, scientists claim that it is theoretically possible to receive about 4.8 billion $m^3$ of hydrogen from agricultural raw materials in Ukraine, annually.

## 15.2. Production of biohydrogen by thermochemical method

In the process of using a thermochemical method or gasification, bio-hydrogen is obtained as part of syngas. Syngas is a mixture of gas containing different amounts of carbon monoxide (*CO*) and hydrogen ($H_2$), as well as small amounts of carbon dioxide ($CO_2$) and methane ($CH_4$). Syngas from agricultural plant biomass is obtained by thermochemical processing (gasification) of biomass.

To increase the content of bio-hydrogen in syngas, unlike the classical method of biomass gasification, water vapor is used, which is supplied directly to the working area of the gasifier. It should be noted that the characteristics of biomass and the operating conditions of the plant for thermochemical conversion of biomass, such as the reaction temperature and the ratio of steam to biomass, play a key role in regulating the content of biohydrogen in syngas.

Recently, the production of biohydrogen as a result of thermal decomposition of biomass of plant origin has become widespread (fig. 15.6).

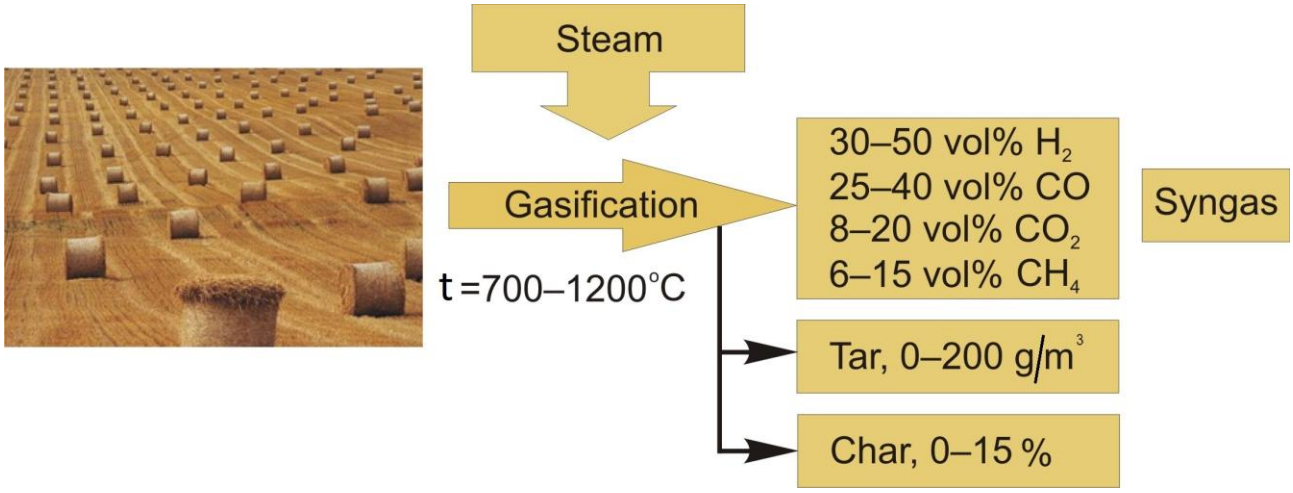


**Fig. 15.6. Schematic representation of the method of producing biohydrogen by thermochemical method**

Thermochemical transformation of biomass using water vapor occurs in accordance with the following reactions:

– carbon gasification:

$$C+H_2O \rightarrow H_2+CO, \quad (15.5)$$

– water-gas conversion:

$$CO+H_2O \rightarrow H_2+CO_2, \quad (15.6)$$

– methane reforming:

$$CH_4+H_2O \rightarrow H_2+CO, \quad (15.7)$$

– recovery of hydrocarbon gases:

$$C_aH_b+aH_2O \rightarrow aCO+(a+b/2)H_2. \quad (15.8)$$

The biohydrogen content in the syngas can be further increased by adding catalysts and absorbents. The percentage of biohydrogen in syngas ranges from 30% to 50%. Therefore, an important element of the technology for obtaining biohydrogen is the distribution of a mixture of gases with the release of pure hydrogen. For this purpose, methods such as low-temperature condensation or fractionation are used. Adsorption isolation is also used by using molecular sieves or using liquid solvents.

Gasifier sets for the production of syngas are becoming increasingly widespread. So a station with a capacity of more than 350 kW (fig. 15.7) are small chemical plants with all the necessary requirements for the materials from which the equipment must be made and requirements for environmental protection. In addition to the production of generator gas, a significant amount of waste accumulates in the form of ash and resinous generator water, which must be disposed of. Therefore, such electrochemical plants have economic efficiency in the production of chemical products with a sufficiently high market price, while simultaneously producing generator gas for power or thermal needs.

This gasifier station is located in the city of Beishi (China) and is designed to produce generator gas with subsequent electricity production. The station runs on pellets or briquettes made from agricultural plant biomass.



**Fig. 15.7. Gas generating station (manufactured in China) with a power capacity of 350 kW, which operates on the remains of agricultural production with humidity up to 30 %**

When gasifying Coke in a separate compartment, the temperature should not be high, so that the ash melting process does not take place. Ash containing alkaline salts and phosphorus can be removed from the compartment, which means that the gas production process does not cause plaque and corrosion of the equipment. The remaining ash can be used as mineral fertilizers.

In industrialized countries, gasifier sets are mainly used for vehicles in areas with an excess of biomass, mainly in agriculture. Similar works are being carried out in Germany, Finland, Denmark, Canada, the USA, Holland and Japan.

Gas-generating vehicles are divided into two groups: temporarily converted to run on generator gas from liquid fuel and specially designed to run on generator gas.

The most successful technical solution is a gasifier of the Imbert type. Cars equipped with gasifiers of this type were also produced by such companies as: GM, Ford, and Mercedes-Benz. Nowadays, firms and enterprises in France and Sweden (VOLVO, fig. 15.8), Ukraine (Polissia National University, fig. 15.9) produce automobile gasifiers that do not require serious alteration of the car and are installed: inside the body, on the trailer, between the cab and the body.

The disadvantages of modern transport-type gasifiers include: significant overall dimensions of the installation; reduction of the usable area and load capacity of the vehicle; frequency of loading the gasifier hopper leads to depressurization of the system and instability of the generator process; intensification of the gasification process is provided by careful preliminary preparation of fuel, increasing the cost of

generator gas.



**Fig. 15.8. Volvo gasifier tractor running on pellets from plant biomass**



**Fig. 15.9. Gaz-53A car with gasifier set produced by Polissia National University**

In modern designs of gasifier sets, air gasification is used. Generator gas obtained by air gasification has a higher calorific value in the range from 4 to 6 MJ/m$^3$. This gas, after cleaning, is used as fuel during the operation of the internal combustion

engine.

Modern gasifiers operate with a weight stress of the mine cross-section up to 300 kg/m$^2$·h. (data are indicated for coke and anthracite) in contrast to the known ones – 150-180 kg/m$^2$·h. However, if the above indicator is increased to 650 kg/m$^2$·h. the composition of the gas significantly worsens, and the content of $CO_2$ and water vapor in the gas increases. For wood fuel, the weight stress of the mine cross-section is from 50 to 90 kg/m$^2$·h.

Modern scientific research of motor transport gasifier sets is aimed at studying the issue of starting the internal combustion engine at low temperatures, reducing engine power when transferring it to generator gas, reducing the weight and dimensions of the gasifier set by using modern more advanced cleaning and cooling methods; using new materials and technologies in the design and production of gasifier units, extending the service life, increasing maintainability and optimizing the layout of the components of the installation.

Technical characteristics of the developed gasifier set are given in table 15.1.

**Table 15.1. Technical characteristics of the GAZ-53A car with a gasifier set**

| Indicator name | Value |
|---|---|
| **Load capacity, kg** | **4,000** |
| **Net weight, kg** | **3,250** |
| **Usable area of the platform, m$^2$** | **8.11** |
| **Maximum speed, km/h** | **80** |
| **Main gear ratio** | **6.83** |
| **Fuel** | **wood pellets** |
| **Fuel consumption, kg / 100 km** | **152** |
| **Vehicle stroke margin on a single generator load based on generator consumption calculations 2/3 of the total fuel volume, km** | **60-70** |
| **Maximum engine power, kW at 3,200 rpm** | **84.6** |
| **Compression ratio** | **6.7** |
| **Gas mixer type** | **injection** |
| **Ignition system** | **battery operated** |
| **Gasification process** | **reverse** |
| **Coarse cleaner-cooler** | **two-piece with perforated plates** |
| **Fine cleaner** | **vertical cylindrical** |
| **Weight of the gasifier set, kg** | **250** |

Moving the gasifier set to the front of the car allows getting a more correct weight distribution on the front and rear axles when loaded (no more than 70% of the car's weight on the rear axle).

Installation of the gasifier set of the GAZ-53A car was carried out taking into account the preservation of the useful area of the car body and a more uniform

distribution of the load on the rear and front axles of the car. The gasifier is located on the left side behind the driver's cab (fig. 15.9), screwed with corners to the frame. The cylindrical cleaner is located under the platform along the spars and is connected to the gasifier by a gas pipeline. An electric fan is located on the cleaner to reduce the ignition time of fuel in the gasifier. The cooler is located under the platform along the spars for better air cooling. This arrangement of the installation on the GAZ-53A car is optimal and does not affect the technical characteristics of the car.

One of the important problems of adapting internal combustion engines to gasifier power is the loss of power, which can reach 40%. The research conducted in the laboratory of the Faculty of Engineering and Energy of Zhytomyr National Agroecological University was limited to an in-depth study of the processes in the system "gasifier set – internal combustion engine" in order to develop a system of measures to improve its energy efficiency.

The main parameters of the gasification process based on gasification conditions have been determined, such as: fuel type, its elementary composition and characteristics; approximate composition of the resulting gas, temperature and humidity of the gas at the outlet of the gasifier and at the outlet of the filter and cooling unit. In particular, the following parameters are set for different types of biomass: lower calorific value of the mixture, air consumption for gasification, dry gas yield from 1 kg of fuel, mass of dry normal gas; water vapor content in the gas. Separately, the performance indicators of the GAZ-53A car engine on gasifier power were studied.

It is rational to use the gasifier set for vehicles that serve agricultural processes at short distances from the biofuel source. The optimal distance radius from the base is from 25 to 30 km.

Thus, the thermochemical conversion of plant biomass for biohydrogen production is a promising approach to overcoming the global energy shortage crisis. Currently, a key step for applying a thermochemical method for producing biohydrogen on an industrial scale is to study cost-effective catalysts that increase $H_2$ production and reduce gasification temperatures.

### 15.3. Production of biohydrogen by fermentation

Bio-hydrogen can be produced through the use of biological processes and related technologies that are less energy-intensive and more environmentally friendly in terms of global reduction of $CO_2$ emissions. These biohydrogen production technologies are competitive with classical technologies in terms of economic indicators, since they can use low-value agricultural raw materials, such as manure droppings and plant biomass. Biohydrogen can be formed under the influence of both autotrophic and heterotrophic microorganisms (fig. 15.10).

In autotrophic transformations, solar energy is directly converted to hydrogen as a result of photosynthetic reactions of photosynthetic microorganisms using the media of microalgae, protists and photosynthetic bacteria. Under heterotrophic conditions, organic substrates are converted to simpler organic compounds with the simultaneous production of molecular biohydrogen. There are two types of heterotrophic transformations: photoactivation, performed by photosynthetic bacteria, and anaerobic

fermentation, in which anaerobic bacteria actually convert carbohydrate compounds, such as glucose, into biohydrogen and organic acids.

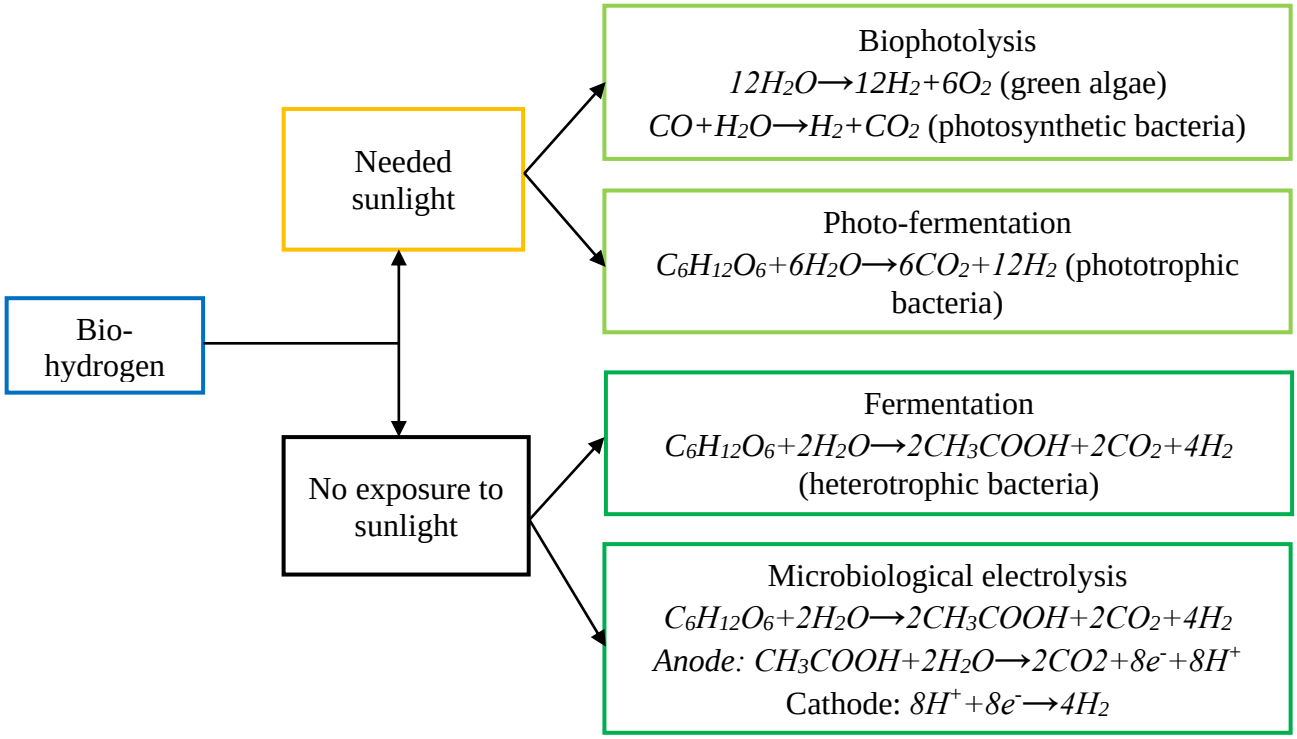


**Fig. 15.10. Biological methods for producing hydrogen**

Anaerobic fermentation is the most studied biological technology and, due to the high productivity and purity of the resulting biohydrogen, is extremely promising. In recent years, there has been an increase in research activity in this area in leading countries.

Recently, two-stage fermentation (fig. 15.11), which uses two bioreactors, has become widespread. In the first bioreactor, biohydrogen is obtained on the basis of hydrolysis of organic biomass (substrate) and organic acids, and in the second, further decomposition of organic acids occurs to produce methane.

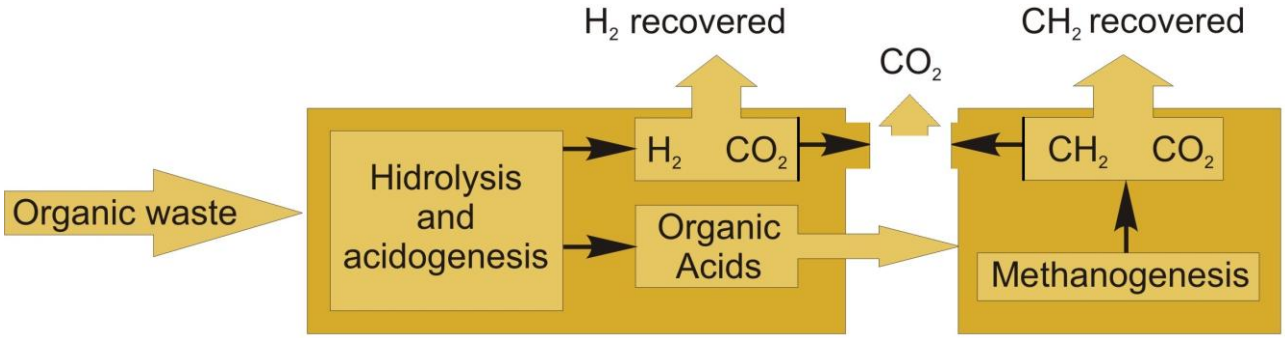


**Fig. 15.11. Schematic representation of the method of producing biohydrogen by two-stage fermentation**

Biohydrogen production occurs mainly due to the decomposition of hydrolyzed glucose biomass, followed by the production of acetic ($CH_3COOH$) and butyric ($C_3H_7COOH$) acids:

$$C_6H_{12}O_6+2H_2O\rightarrow 2CH_3COOH+2CO_2+4H_2; \quad (15.9)$$

$$C_6H_{12}O_6\rightarrow CH_3CH_2CH_2COOH+2CO_2+2H_2. \quad (15.10)$$

A diagram of one of the variants of the biogas plant developed by the authors for the simultaneous production of biohydrogen and biogas is given in fig. 15.12.

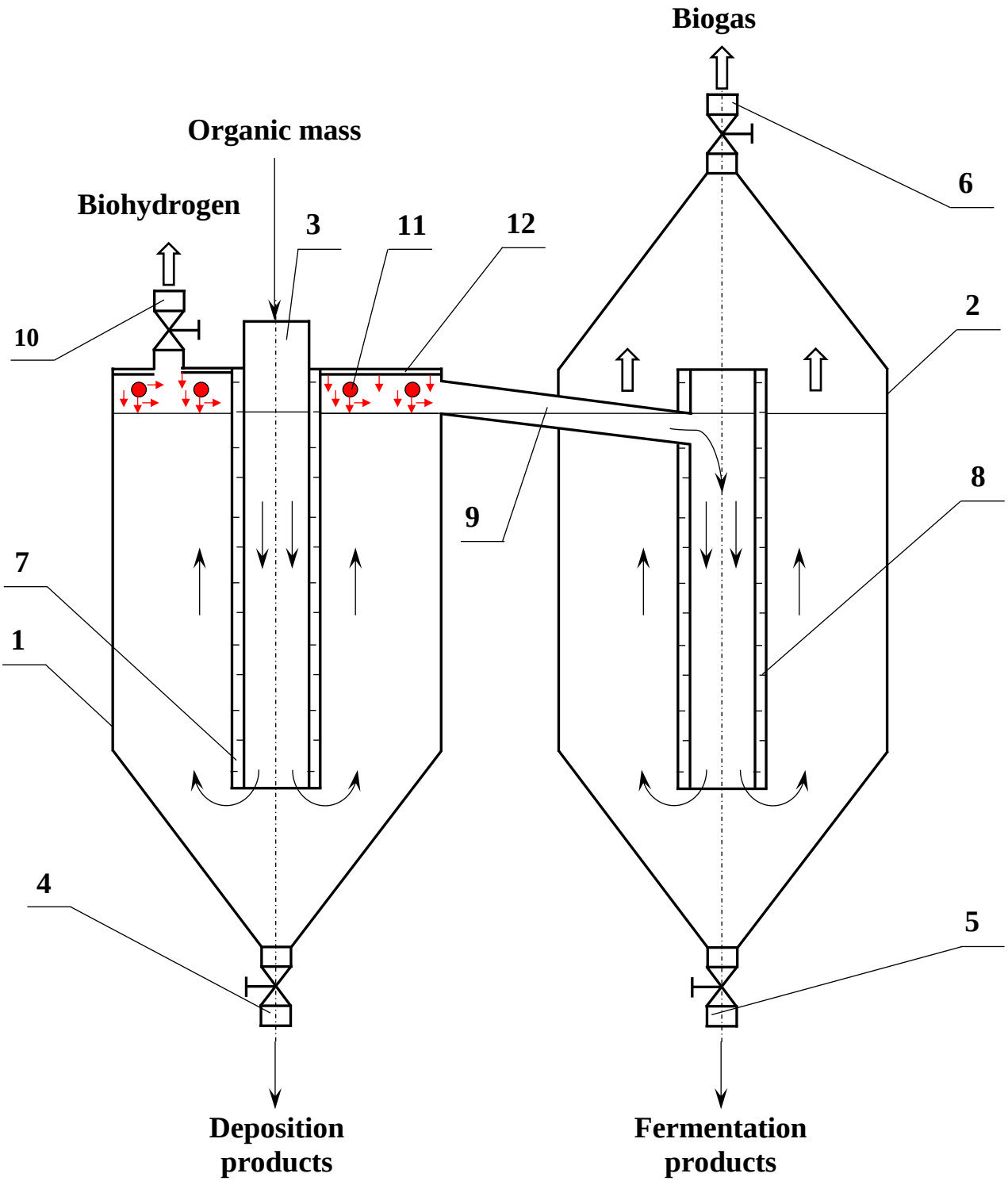


**Fig. 15.12. Scheme of a biogas plant for simultaneous production of biohydrogen and biogas**

Two-stage processes that combine the production of biohydrogen at the first stage and biomethane at the second stage not only increase the stability of the

fermentation process, but also guarantee complete processing of organic waste.

### 15.4. Green hydrogen storage and use

After hydrogen production, hydrogen storage is the next step which is done by various methods, as shown in Fig. 15.13. Physical hydrogen storage is the most common method, in which hydrogen can be supplied as either liquid or gas forms. Hydrogen storage in the gas phase needs special storage tanks with the capability of enduring very high pressures ranging from 350 to 700 bar. For hydrogen storage in the liquid form, considering the extremely low boiling point of hydrogen (-252.87ºC) at ambient pressure, cryogenic temperatures are required. The other methods of hydrogen storage are absorption (inside solids) and adsorption (on the surfaces of solids). Most of the existing hydrogen storage units use large-volume vessels that are able to supply hydrogen in gaseous form. This is not a matter for stationary uses, where the high volume of compressed gas tanks is not a challenge. But the story is completely different for mobile and automotive hydrogen storage applications, where the hydrogen storage volume should be as low as possible.

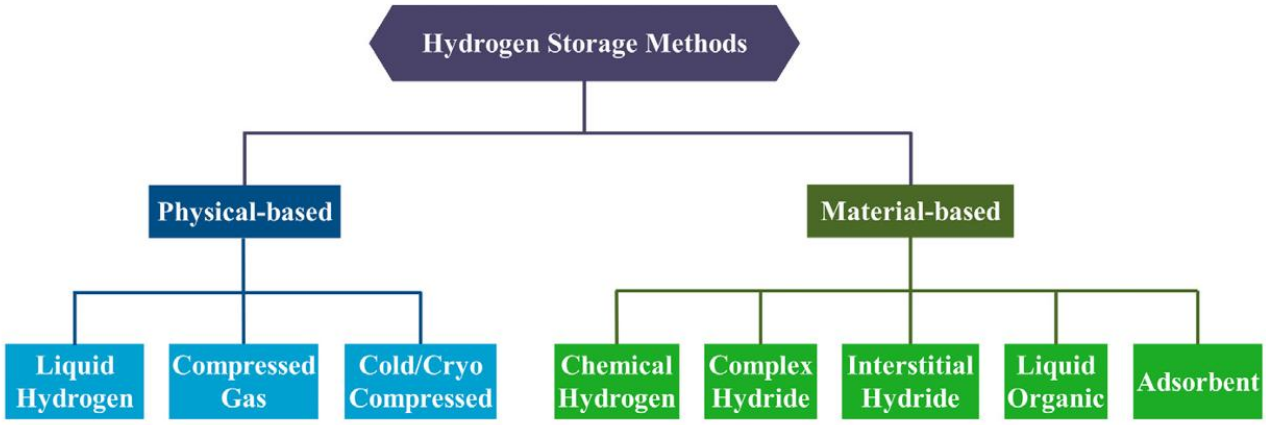


**Fig. 15.13. Hydrogen storage methods**

Therefore, to meet this requirement, research and development of storing hydrogen in special materials have attracted great attention. Currently, the metal hydride, sorbent material, and chemical storage of hydrogen are some of the available options to be used for hydrogen storage, especially in automotive applications. However, most of them are not economical at present.

Like other fuels, hydrogen does have a degree of danger; hence, safety parameters should be taken into consideration to avoid the presence of three combustion elements: ignition, oxidant, and fuel. Fortunately, hydrogen is nontoxic and much lighter than air, dissipating quickly in the case of leakage. Actually, the major danger happens when a confined room is filled with an unnoticed leakage, which can cause ignition and explosion. Moreover, hydrogen has some special characteristics that need extra engineering monitoring to guarantee its safety. For example, hydrogen can flame in a wide concentration range (4−75%) and needs very low ignition energy (10% of gasoline). Also, its embrittlement and corrosion properties in case of leakage need

special attention to be paid during the selection of suitable materials.

In agro-industrial production, biohydrogen can be used for the production of ammonia (the basis of nitrogen fertilizers). Bio-hydrogen is considered as a promising fuel for gas networks and road transport.

One of the reasons for the active use of hydrogen as an energy resource is the need to reduce greenhouse gas emissions. For example, according to the International Energy Agency, adding 20% of bio-hydrogen to the European gas network will reduce $CO_2$ emissions by 60 million tons per year. It should be noted that Europe considers Ukraine a country with great potential and European politicians claim that Ukraine can become the main supplier of hydrogen to the EU market. The use of bio-hydrogen would not only reduce $CO_2$ emissions, but also have a significant economic effect.

One of the areas of bio-hydrogen use, which has been actively developing recently, is its use in road transport. Hydrogen-powered vehicles are called Fuel Cell Electric Vehicles (FCEV). Such cars use a fuel cell (electrochemical generator), which is a kind of "battery", which receives hydrogen, after which it is oxidized and as a result at the output we have electrical energy and pure water vapor with zero carbon dioxide content (fig. 15.14).

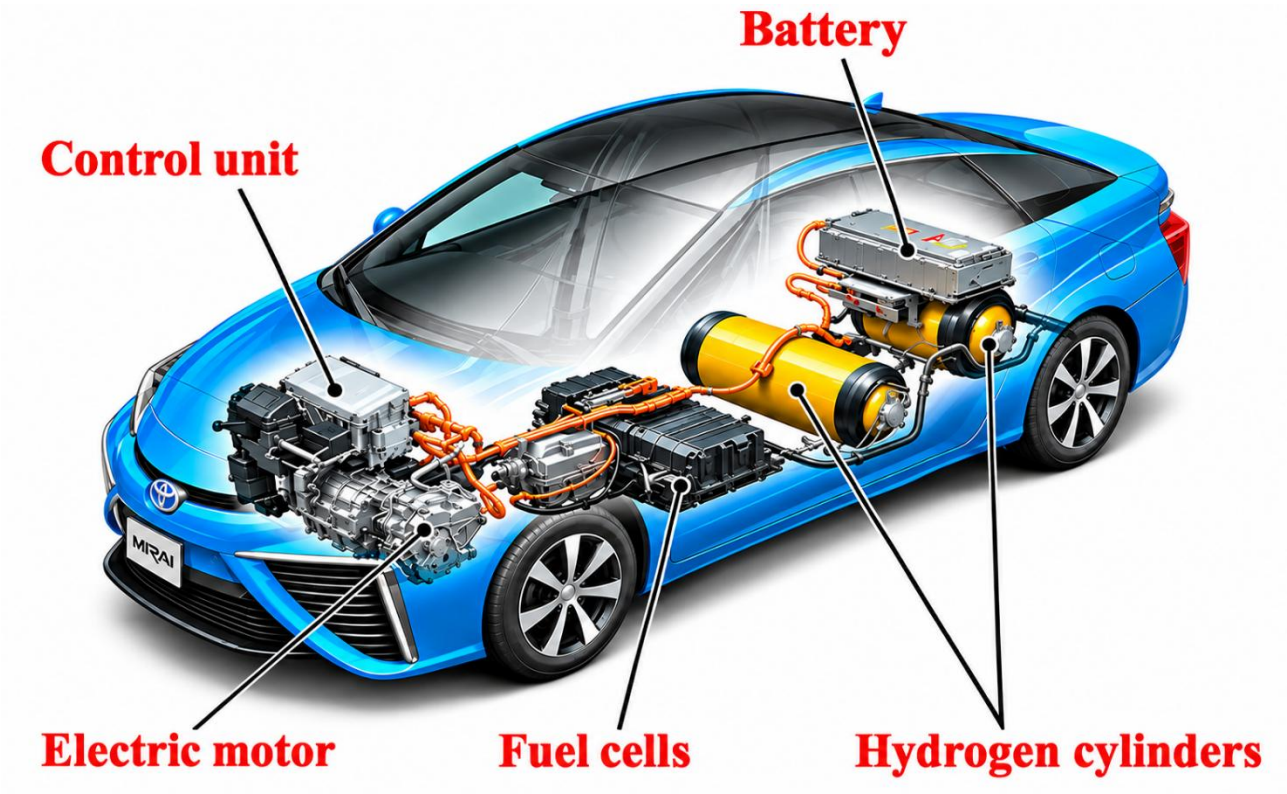


**Fig. 15.14. Schematic structure of the Toyota Mirai hydrogen car [source: https://www.japan.go.jp/tomodachi/2017/spring-summer2017/creating_a_hydrogen_society.html]**

Further, everything is almost the same as in a conventional electric car, but in the case of a hydrogen installation, a much more compact battery is used – the capacity of a lithium-ion battery in hydrogen cars is 10 times less, since it is used only for cold start and buffering the energy obtained during regenerative braking.

The hydrogen trolleybuses have started running in Riga, and $H_2$ City Gold buses, powered by hydrogen fuel cells, have started operating in England and Spain.

New Holland Company has started delivering the first hydrogen tractors. This tractor is marked New Holland T5.140 (fig. 15.15) and runs on hydrogen in combination with diesel fuel. The engine is powered by a mixture of diesel fuel and 65% hydrogen, while in heavy work the ratio changes in the direction of increasing the use of diesel fuel. The hydrogen comes from five cylinders located on the roof of the cabin, which hold 470 kg of compressed hydrogen.

The use of fuel cells is developing not only in transport. It is also an extremely promising area for the development of autonomous energy sources (for example, for the power supply of private residential buildings and small offices using small installations with a capacity of 3 to 5 kW).

Another promising area of use of bio-hydrogen is heating of residential buildings. For example, in England, a mixture of 20% hydrogen and natural gas has already been used to heat homes. The project was launched at the end of January 2020. Currently, a mixture of hydrogen and gas is heating the building of Kiel University, located in Staffordshire, and 100 other homes in the district. They also started heating homes in the Netherlands with hydrogen. In Rosenburg, domestic boiler running on hydrogen was put into operation for heating a residential building.



**Fig. 15.15. Hydrogen tractor New Holland T5.140 [source: https://www.trattoriweb.com/new-holland-t5-140-auto-command-ecco-la-versione-diesel-idrogeno-con-tecnologia-h2-dual-power/]**

In Japan, Kawasaki Heavy Industries and Obayashi use hydrogen power to power the city of Kobe. A 1 MW hydrogen power plant was built in the city (fig. 15.16), and provides electric energy to the International Conference Center and work offices for 10 thousand local residents. Besides, the heat generated at the station in the process of generating electricity from hydrogen is effective for heating local homes and office buildings. The plant uses gas turbines manufactured by Kawasaki Heavy Industries, which are supplied with a fuel mixture containing 20% hydrogen and 80% natural gas. The port of Kobe has established an infrastructure for importing hydrogen, as Kawasaki Heavy Industries plans to develop a network of hydrogen – powered electric power facilities in Japan. The industrial concern Kawasaki Heavy Industries was the first to organize sea transportation of hydrogen. It is cooled to a temperature of minus 253°C and transported to the consumer in liquefied form.



**Fig. 15.16. Hydrogen power plant on Port Island in Kobe (Japan) [source: https://www.nedo.go.jp/english/news/AA5en_100382.html]**

Ukraine is also developing the use of bio-hydrogen. For example, at the end of February 2019, a large-scale experiment was prepared by the regional gas company, which for the first time in Ukraine began test transportation of a mixture of hydrogen and natural gas in closed sections of the gas distribution system. This experiment is necessary in order to understand how the existing gas delivery system will behave when using hydrogen.

### 15.5. Fuel cells

Recently, the basis of hydrogen energy is systems that use a fuel cell as an energy source (fig. 15.17) or the fuel cell. For example, a Honda FCX Clarity car powered by a hydrogen fuel cell can travel 570 kilometers on a full tank of hydrogen with a volume of 0.171 $m^3$, or 5 kg of hydrogen at a pressure of 35 MPa. A hydrogen fuel cell generates electrical energy during an electrochemical reaction in which hydrogen

atoms entering under pressure decompose into electrons and protons. Electrons enter the external circuit, creating an electric current, then protons pass through the membrane, where oxygen and electrons combine with them. The only byproduct of this reaction is water vapor and heat. The electric current generated by the fuel cell drives the electric motor.

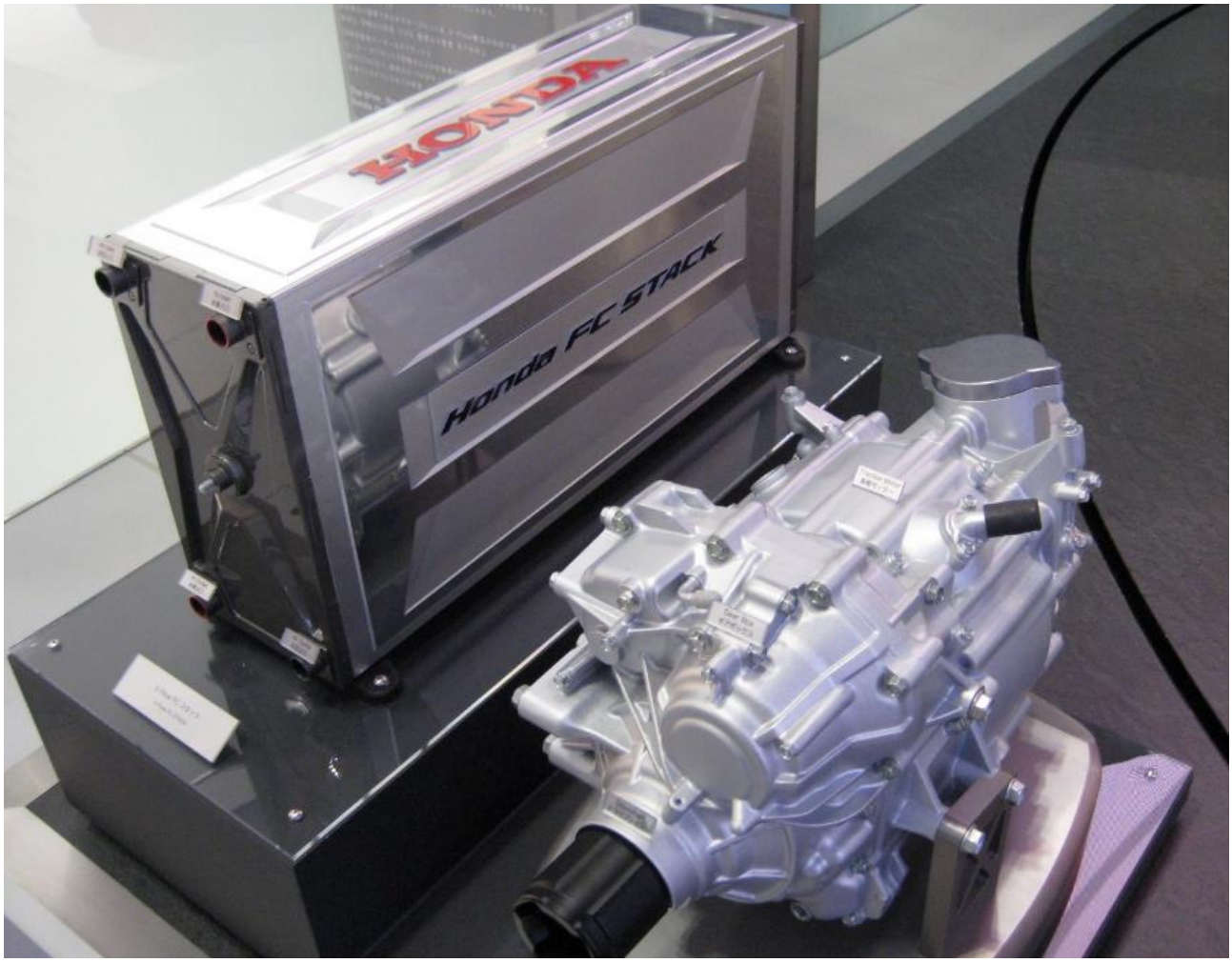


**Fig. 15.17. Fuel cell used in the Honda FCX Clarity car**

Fuel cells were first described in 1839 by the English chemist William Robert Grove. Once he observed the process of electrolysis of water in solutions of sulfuric acid, and noticed that when the external current was turned off, a direct current began to be generated in the electrolytic cell. The resulting device was called a "gas battery". For the first time, the name "fuel cell" was used in the middle of the XX century. Industrial use of hydrogen fuel cells began due to the active development of outer space. So in the early 60's of the XX century. In the United States, fuel cells with a capacity of up to 1 KW were created for the American Gemini and Apollo programs, and in the 80's with a capacity of 10 kW for the Space Shuttle program. In the late 80's, the first 100 kW power plants were built using phosphoric acid fuel cells. Currently, experimental power plants with a capacity of 10 MW are operating. Fuel cells have been developed for stationary autonomous power engineering in a wide range of capacities. In addition, the development of portable power sources for computers,

phones, and other equipment continues.

A fuel cell is an electrochemical device in which the process of combining hydrogen fuel and oxygen with the release of electricity, heat and water takes place. Hydrogen is stored in an airtight container under pressure, and oxygen is taken from the atmosphere. Due to the lack of combustion, there are no harmful emissions, the product of this process is only clean water. This water, released by the proton-exchange membrane of the fuel cell, is so pure that at the fuel cell demonstration, visitors can often be treated to tea made from this water.

Fundamentally, in a fuel cell, the electrolysis process takes place in the opposite direction – using two electrodes separated by an electrolyte. Hydrogen is supplied to the anode (negative electrode), but oxygen is supplied to the cathode (positive electrode). The catalyst at the anode dissociates hydrogen into positively charged hydrogen ions and electrons. Ionized oxygen migrates through the electrolyte to the anode, where it combines with hydrogen. In other words, hydrogen and oxygen are supplied by metal electrodes (anode and cathode, respectively), the electrodes are connected to each other by an electric current conductor. In this case, the anode that receives hydrogen receives electrons from hydrogen atoms. Hydrogen atoms acquire a positive charge; they are also called $H^+$ protons. Then, through a metal conductor, the electrons move to the cathode, which receives oxygen. From the cathode, electrons are transferred to the oxygen atoms, and accordingly the oxygen atoms acquire a negative $O^-$ charge. In a fuel cell, $H^+$ protons and $O_2$ ions are separated, and an electrolyte is required to combine them. As an electrolyte, for example, an aqueous solution of potassium hydroxide containing $OH^-$ and $K^+$ ions is used. The diagram of a hydrogen-oxygen fuel cell is shown in fig. 15.18.

In hydrogen fuel cells, oxygen is reduced at the cathode:

$$0.5O_2+H_2O+2e^-\rightarrow 2OH^-, \quad (15.11)$$

hydrogen is oxidized at anode, and the resulting protons combine with groups *OH-:*

$$H_2+2OH^-\rightarrow 2H_2O+2e^- \quad (15.12)$$

The main advantage of a fuel cell over internal combustion engines is that the energy of chemical processes is almost completely converted into electrical energy. The efficiency of an internal combustion engine is not more than 30%. And the efficiency of the fuel cell is from 50 to 95%. A single fuel cell can provide a voltage of 0.6 to 0.8 V under load. To ensure a higher voltage, several elements must be connected in series.

One of the most common modern variants of fuel cells is solid-oxide fuel cells (SOFC), fig. 15.19). A special feature of such elements is that the electrolyte in them is a ceramic material (for example, based on zirconium dioxide) that is permeable to oxygen ions. These elements operate at very high temperatures (from 700 to 1,000°C) and are mainly used for installations with a capacity of 1 kW and above.

The modular structure of fuel cells allows them to be widely used from small portable electronic devices to large stationary installations and vehicles. Advantages of using fuel cells: high energy efficiency; zero emissions into the atmosphere when using hydrogen; mechanical simplicity, no vibration and low noise, no strict maintenance requirements; high ratio of generated electricity to thermal energy output compared to conventional thermal power plants.

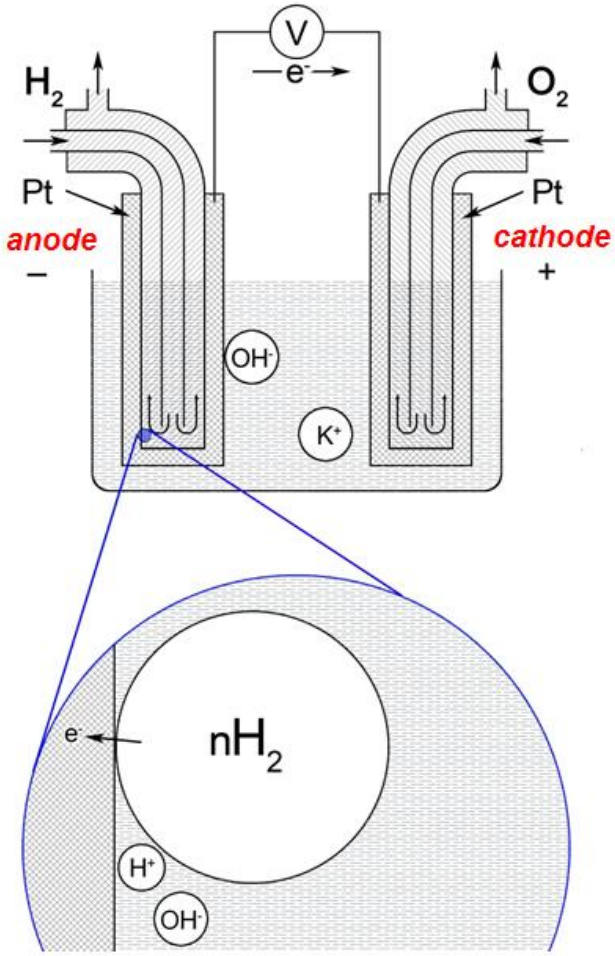


**Fig. 15.18. Schematic representation of the principle of operation of a hydrogen fuel cell [source: https://techemy.com]**

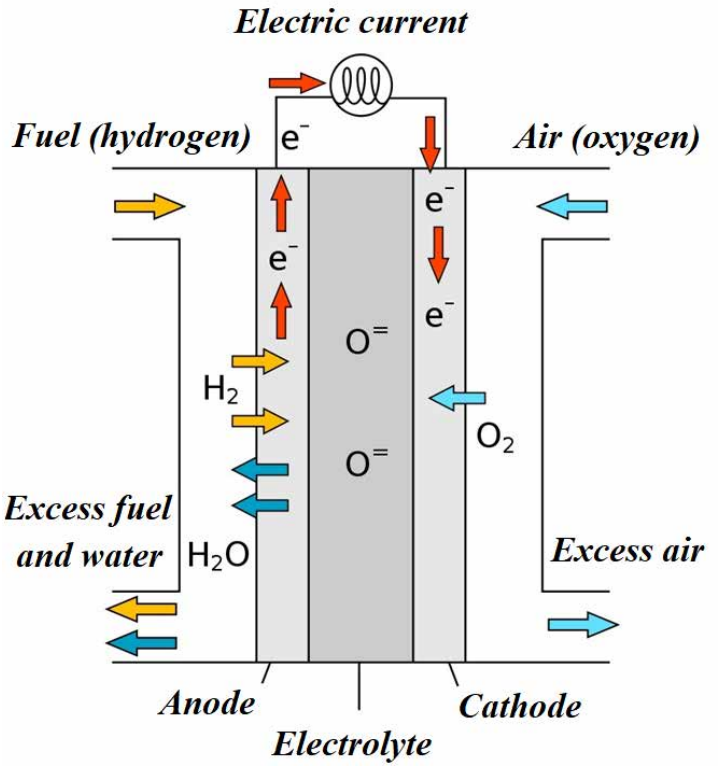


**Fig. 15.19. Schematic diagram of a solid oxide fuel cell**

Perhaps most importantly, fuel cells can be seen as a "revolutionary technology" that uses hydrogen and can transform our world into a cleaner and more efficient one. Fuel cells provide a wide range of applications for innovation and pave the way for technologies that are currently impossible to predict.

**Questions for self-assessment:**

1. What group and period of the periodic table of chemical elements does hydrogen belong to?
2. Name the most common chemical element in the universe.
3. Specify the chemical formula of hydrogen gas.
4. Name the main physical characteristics of hydrogen gas.
5. What is the calorific value of hydrogen, and how much higher is it than that of gasoline or diesel fuel?
6. List the main industrial methods for producing hydrogen.
7. What is the essence of the electrolysis process?
8. What electrolyzer schemes do you know?
9. How does a proton exchange membrane electrolyzer work?
10. How does an alkaline water electrolyzer work?
11. How does a solid oxide electrolyzer work?
12. Describe the operation of a combined system based on a medium-range geothermal source and parabolic trough solar collectors for hydrogen production using PEM.
13. Describe the operation of an industrial production of hydrogen based on water electrolysis using electrical energy obtained from wind farms or photovoltaic systems.
14. How can hydrogen be obtained from agricultural biomass?
15. Explain the essence of thermochemical hydrogen production.
16. Explain the essence of hydrogen production by fermentation.
17. Name the main reasons for the intensification of the biohydrogen use.
18. Name the main modern directions of using biohydrogen.
19. What is called a fuel cell?
20. Explain how hydrogen fuel cells work.
21. Describe how a hydrogen-powered vehicle works.

**References:**


1. Abdol Rahim A. H., Tijani A. S., Kamarudin S. K., Hanapi S. An overview of polymer electrolyte membrane electrolyzer for hydrogen production: modeling and mass transport. *Journal of Power Sources*. 2016. Vol. 309. P. 56–65.
2. Atlas of the energy potential of renewable energy sources of Ukraine / ed. S. O. Kudrya. 3rd ed., updated. Kyiv : Institute of Renewable Energy of the NAS of Ukraine, 2024. 56 p.
3. Baeyens J., Zhang H., Nie J., Appels L., Dewil R., Ansart R., Deng Y. Reviewing the potential of bio-hydrogen production by fermentation. *Renewable and Sustainable Energy Reviews*. 2020. Vol. 131. Article 110023.

4. Brisse A., Schefold J., Zahid M. High temperature water electrolysis in solid oxide cells. *International Journal of Hydrogen Energy*. 2008. Vol. 33, No. 20. P. 5375–5382.

5. Burnat D., Schlupp M., Wichser A., Lothenbach B., Gorbar M., Züttel A., Vogt U. F. Composite membranes for alkaline electrolysis based on polysulfone and mineral fillers. *Journal of Power Sources*. 2015. Vol. 291. P. 163–172.

6. Cao L., Yu I. K. M., Xiong X., Tsang D. C. W., Zhang S., Clark J. H., Hu C., Ng Y. H., Shang J., Ok Y. S. Biorenewable hydrogen production through biomass gasification: a review and future prospects. *Environmental Research*. 2020. Vol. 186. Article 109547.

7. Das D., Veziroglu T. N. Advances in biological hydrogen production processes. *International Journal of Hydrogen Energy*. 2008. Vol. 33, No. 21. P. 6046–6057.

8. Gas for Climate study describes gas decarbonisation pathways from 2020 to 2050, identifies required investments to scale-up hydrogen and biomethane. *FuelCellsWorks*. 2020. URL: https://fuelcellsworks.com/news/gas-for-climate-study-describes-gas-decarbonisation-pathways-from-2020-to-2050-identifies-required-investments-to-scale-up-hydrogen-and-biomethane/ (date of access: 14.06.2025).

9. Golub G. A., Kukharets S. M., Chuba V. V., Marus O. A. Production and use of biofuels in agroecosystems. Mechanical and technological bases : monograph. Kyiv : NULES of Ukraine, 2018. 254 p.

10. Grigoriev S. A., Porembsky V. I., Fateev V. N. Pure hydrogen production by PEM electrolysis for hydrogen energy. *International Journal of Hydrogen Energy*. 2006. Vol. 31, No. 2. P. 171–175.

11. Guo L., Li X.-M., Bo X., Yang Q., Zeng G.-M., Liao D., Liu J.-J. Impacts of sterilization, microwave and ultrasonication pretreatment on hydrogen producing using waste sludge. *Bioresource Technology*. 2008. Vol. 99, No. 9. P. 3651–3658.

12. Hydrogen is closer to people. In Ukraine, two villages will switch to hydrogen heating. *Ekonomichna Pravda*. 2021. 16 March. URL: https://www.epravda.com.ua/projects/greendeal/2021/03/16/671950/ (date of access: 18.06.2022).

13. Ju H., Badwal S., Giddey S. A comprehensive review of carbon and hydrocarbon assisted water electrolysis for hydrogen production. *Applied Energy*. 2018. Vol. 231. P. 502–533.

14. Knibbe R., Traulsen M. L., Hauch A., Ebbesen S. D., Mogensen M. Solid oxide electrolysis cells: degradation at high current densities. *Journal of the Electrochemical Society*. 2010. Vol. 157, No. 8. P. B1209–B1217.

15. Krupp M., Widmann R. Biohydrogen production by dark fermentation: experiences of continuous operation in large lab scale. *International Journal of Hydrogen Energy*. 2009. Vol. 34, No. 10. P. 4509–4516.

16. Lai Q., Sun Y., Wang T., Modi P., Cazorla C., Demirci U. B., Aguey-Zinsou K.-F. How to design hydrogen storage materials? Fundamentals, synthesis, and storage tanks. *Advanced Sustainable Systems*. 2019. Vol. 3, No. 9. Article 1900043.

17. Li C., Fang H. H. P. Fermentative hydrogen production from wastewater and solid wastes by mixed cultures. *Critical Reviews in Environmental Science and Technology*. 2007. Vol. 37, No. 1. P. 1–39.

18. Millet P., Ngameni R., Grigoriev S. A., Mbemba N., Brisset F., Ranjbari A., Etiévant C. PEM water electrolyzers: from electrocatalysis to stack development. *International Journal of Hydrogen Energy*. 2010. Vol. 35, No. 10. P. 5043–5052.

19. Nikolaidis P., Poullikkas A. A comparative overview of hydrogen production processes. *Renewable and Sustainable Energy Reviews*. 2017. Vol. 67. P. 597–611.

20. Pandey B., Prajapati Y. K., Sheth P. N. Recent progress in thermochemical techniques to produce hydrogen gas from biomass: a state of the art review. *International Journal of Hydrogen Energy*. 2019. Vol. 44, No. 47. P. 25384–25415.

21. Ratti R. P., Delforno T. P., Sakamoto I. K., Varesche M. B. A. Thermophilic hydrogen production from sugarcane bagasse pretreated by steam explosion and alkaline delignification. *International Journal of Hydrogen Energy*. 2015. Vol. 40, No. 19. P. 6296–6306.

22. Razmi A. R., Sharifi S., Gholamian E., Arabkoohsar A., Shahbakhti M. Green hydrogen. *Future grid-scale energy storage solutions : mechanical and chemical technologies and principles* / ed. A. Arabkoohsar. Amsterdam : Academic Press, 2023. Chap. 15. P. 573–613.

23. Seetharaman S., Balaji R., Ramya K., Dhathathreyan K. S., Velan M. Graphene oxide modified non-noble metal electrode for alkaline anion exchange membrane water electrolyzers. *International Journal of Hydrogen Energy*. 2013. Vol. 38, No. 35. P. 14934–14942.

24. Shiva Kumar S., Himabindu V. Hydrogen production by PEM water electrolysis – a review. *Materials Science for Energy Technologies*. 2019. Vol. 2, No. 3. P. 442–454.

25. Skydan O. V., Golub G. A., Kukharets S. M., Yarosh Y. D., Chuba V. V., Medvedskyi O. V., Tsyvenkova N. M., Sokolovskyi O. F., Kukharets V. V. Renewable energy in agricultural production : textbook. Kyiv ; Zhytomyr : NULES of Ukraine ; ZhNAEU, 2018. 320 p.

26. Stergiannakos T., Tylianakis E., Klontzas E., Trikalitis P. N., Froudakis G. E. Hydrogen storage in novel Li-doped corrole metal-organic frameworks. *Journal of Physical Chemistry C*. 2012. Vol. 116, No. 15. P. 8359–8363.

27. Streppel B., Hirscher M. BET specific surface area and pore structure of MOFs determined by hydrogen adsorption at 20 K. *Physical Chemistry Chemical Physics*. 2011. Vol. 13, No. 8. P. 3220–3222.

28. Tabkhi F., Azzaro-Pantel C., Pibouleau L., Domenech S. A mathematical framework for modelling and evaluating natural gas pipeline networks under hydrogen injection. *International Journal of Hydrogen Energy*. 2008. Vol. 33, No. 21. P. 6222–6231.

29. Renewable energy in agriculture / G. A. Golub, O. V. Skydan, S. M. Kukharets, N. M. Tsyvenkova, O. A. Marus, Y. D. Yarosh, V. V. Chuba, M. Yu. Pavlenko ; ed. by G. A. Golub, O. V. Skydan. Kyiv ; Zhytomyr : NULES of Ukraine ; Polissia University, 2023. 400 p.

**Educational edition**

**Gennadii GOLUB**
**Ivan ROGOVSKII**
**Ahmad ARABKOOHSAR**
**Nataliya TSYVENKOVA**
**Andrés HONRUBIA-ESCRIBANO**
**Savelii KUKHARETS**
**Volodymyr NADYKTO**
**Oleh MARUS**

# SUSTAINABLE ENERGY IN AGRICULTURE

for students of higher educational establishments
in the following specialties:
G11 – Industrial Mechanical Engineering;
G21 – Biotechnologies and Bioengineering;
H7 – Agroengineering;
J8 – Road Transport

**Edited by Professor G. Golub**

Signed to print 09.10.26. Format 70×100/16
Rel. print. sides 32.5. Run 1000 copies. Order No.230535.

Publisher and manufacturer National University of Life
and Environmental Sciences of Ukraine,
15 Heroiv Oborony Str., Kyiv, 03041.
Certificate of the publishing entity
DC No. 4097 dated 17.06.2011

copilot

copilotproject.eu

# Enhancing Deep Tech Innovation and Entrepreneurship Capacities in Sustainable Energy and Clean Technologies for a long-lasting institutional change within European HEIs

NATIONAL UNIVERSITY OF LIFE AND ENVIRONMENTAL SCIENCES OF UKRAINE

DTU Technical University of Denmark

UCLM Universidad de Castilla-La Mancha
CAMPUS OF INTERNATIONAL EXCELLENCE

eit Food

Funded by the European Union

INNOVATION CAPACITY BUILDING FOR HIGHER EDUCATION
PART OF EIT HEI Initiative
eit-hei.eu